Ordering number: EN3342B
查询LA1875供应商 捷多邦，专业PCB打样工厂，24小时加急出货

Monolithic Linear IC

SANYO

No.3342B

LA1875M

Single-chip, Electronic Tuner for Car Stereos

OVERVIEW

The LA1875M is an electronic tuner IC that incorporates AM, FM IF and MPX circuit sections on a single chip, making it ideal for use in car stereo equipment.

The LA1875M features an antenna-damping AM AGC circuit with rapid charge and discharge characteristics. It also features an S-meter driver, tuning and FM-stereo LED outputs, FM soft-mute and forced-mono modes and a no-adjustment MPX VCO.

The LA1875M AM circuit comprises a mixer, oscillator, RF AGC, IF amplifier and IF buffer. The FM IF circuit comprises an IF amplifier, quadrature detector, and AFC and IF buffer outputs. The MPX circuit comprises a VCO and stereo noise control (SNC) and high-cut control (HCC) circuits.

The LA1875M operates from a 7 to 10 V supply and is available in 36-pin MFPs.

FEATURES

- AM, FM IF and MPX circuits
- Antenna-damping AM AGC circuit with rapid charge and discharge characteristics
- S-meter driver
- Tuning and FM-stereo LED outputs
- AFC and IF buffer outputs
- AM mixer, oscillator, AGC, IF amplifier and IF buffer
- FM IF amplifier, quadrature detector
- MPX no-adjustment VCO, SNC and HCC
- FM soft-mute and forced-mono modes
- 7 to 10 V supply
- 36-pin MFP

PACKAGE DIMENSIONS

Unit: mm

3129-MFP36S

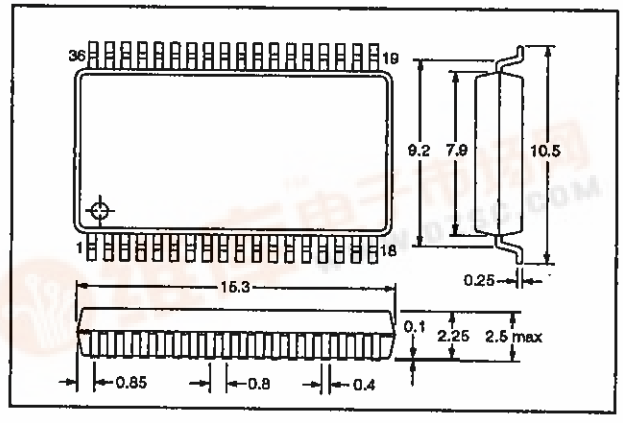

找PDF 维库一下 pdf.dzsc.com

SPECIFICATIONS

Absolute Maximum Ratings

Parameter	Symbol	Rating	Unit
Supply voltage	V_{CC}	11	V
Power dissipation ($T_a \leq 50$ °C)	P_D	720	mW
Operating temperature range	Topr	−30 to 80	°C
Storage temperature range	T_{stg}	−40 to 150	°C

Recommended Operating Conditions

T_a = 25 °C

Parameter	Symbol	Rating	Unit
Supply voltage	V_{CC}	8.5	V
Supply voltage range	V_{CC}	7 to 10	V

Electrical Characteristics

FM characteristics

V_{CC} = 8.5 V, T_a = 25 °C, f_c = 10.7 MHz, f_m = 1 kHz, 75 kHz deviation unless otherwise noted

Parameter	Symbol	Condition	Rating			Unit
			min	typ	max	
Quiescent supply current	I_{CCO}	No signal	21	31	41	mA
−3 dB limiting sensitivity	−3dBLS	Referred to V_I = 100 dBμ. Mute is ON.	27	37	47	dBμ
Tuning LED turn-on input voltage	V_{LED}	V_{26} = 2 V	43	58	73	dBμ
Detector output voltage	V_O	V_I = 100 dBμ	165	250	345	mV
S-meter output voltage	V_{SM}	No signal	0	0.15	0.7	V
		V_I = 100 dBμ	5.0	6.1	7.0	
IF buffer output voltage	V_{IF}	V_I = 80 dBμ, V_{12} = 5 V	200	360	540	mV
SNC output voltage	V_{SUB}	V_I = 100 dBμ, V_{34} = 0.1 V. See note.	–	0.5	5.0	mV
Tuning LED turn-on bandwidth	BW_{LED}	V_I = 100 dBμ, $V_{26} \geq 2$ V	85	130	180	kHz
Signal-to-noise ratio	S/N	V_I = 100 dBμ	66	74	–	dB
AM suppression ratio	AMR	V_I = 100 dBμ at 1 kHz with 30% AM modulation	38	60	–	dB
Separation	Sep	V_I = 100 dBμ. See note.	30	45	–	dB
Channel balance	CB		−1.5	0	1.5	dB
HCC output attenuation	α	V_I = 100 dBμ, V_{33} = 0.6 V, f_m = 10 kHz. See note.	−10.0	−5.0	−0.5	dB
Stereo LED turn-on pilot tone modulation	LED-ON	V_I = 100 dBμ	1.8	3.2	5.0	%
Stereo LED turn-off pilot tone modulation	LED-OFF	V_I = 100 dBμ	–	2.2	–	%

Parameter	Symbol	Condition	Rating			Unit
			min	typ	max	
Total harmonic distortion	THD	V_I = 100 dBμ, mono signal	–	0.5	2.5	%
		V_I = 100 dBμ, main channel signal	–	0.5	2.5	

Note
V_I comprises 90% left + right signal and 10% pilot signal.

AM characteristics

V_{CC} = 8.5 V, T_a = 25 °C, f_c = 1 MHz, f_m = 1 kHz with 30% modulation

Parameter	Symbol	Condition	Rating			Unit
			min	typ	max	
Quiescent supply current	I_{CCO}	No signal	15	24	33	mA
Tuning LED turn-on input voltage	V_{LED}	V_{26} = 2 V	21	30	39	dBμ
RF AGC turn-on input voltage	V_{AGC}	V_1 = 3 V	50	57	64	dBμ
Detector output voltage	V_O	V_I = 25 dBμ	18	40	68	mV
		V_I = 74 dBμ	70	105	156	
IF buffer output voltage	V_{IF}	V_I = 50 dBμ, V_{12} = 5 V	150	260	390	mV
S-meter output voltage	V_{SM}	No signal	0	0.7	1.3	V
		V_I = 74 dBμ	2.6	3.7	5.2	
Pin-diode driver current	I_{antd}	V_1 = 0.7 V	2.0	2.5	3.0	mA
Signal-to-noise ratio	S/N	V_I = 25 dBμ	17	21	–	dB
		V_I = 74 dBμ	42	49	–	
Total harmonic distortion	THD	V_I = 74 dBμ	–	0.35	1.0	%
		V_I = 130 dBμ	–	0.4	2.0	

Typical Performance Characteristics

Maximum power dissipation vs. ambient temperature

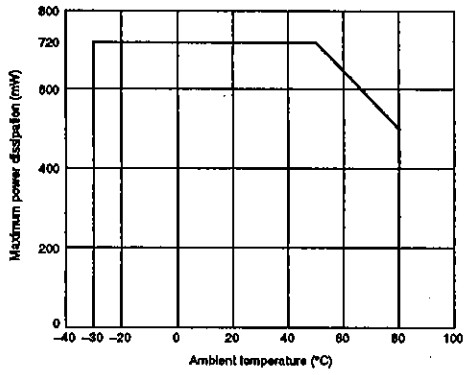

Block Diagram

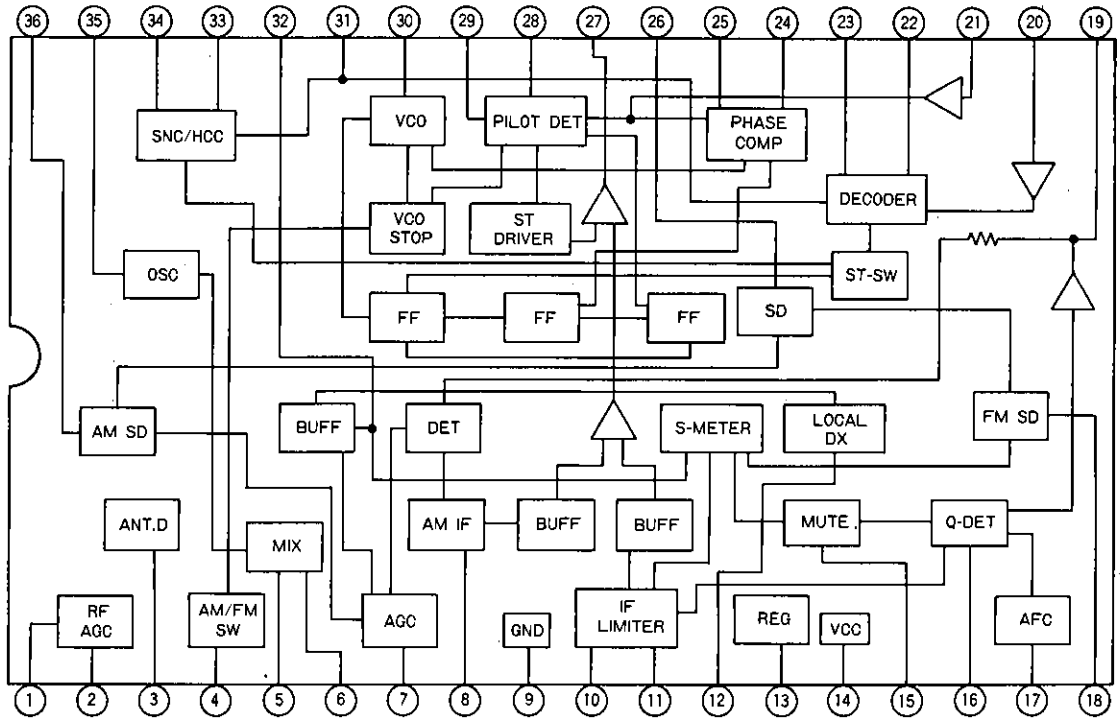

Sample Printed Circuit Pattern

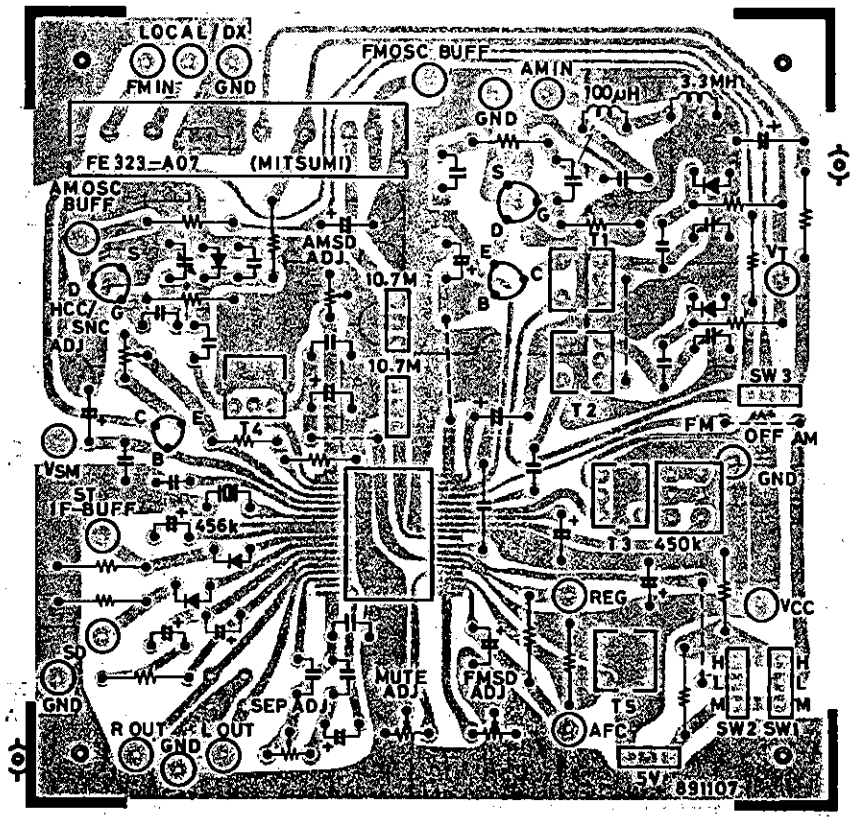

Cu-foiled area 90×90mm²

Specified Test Circuit

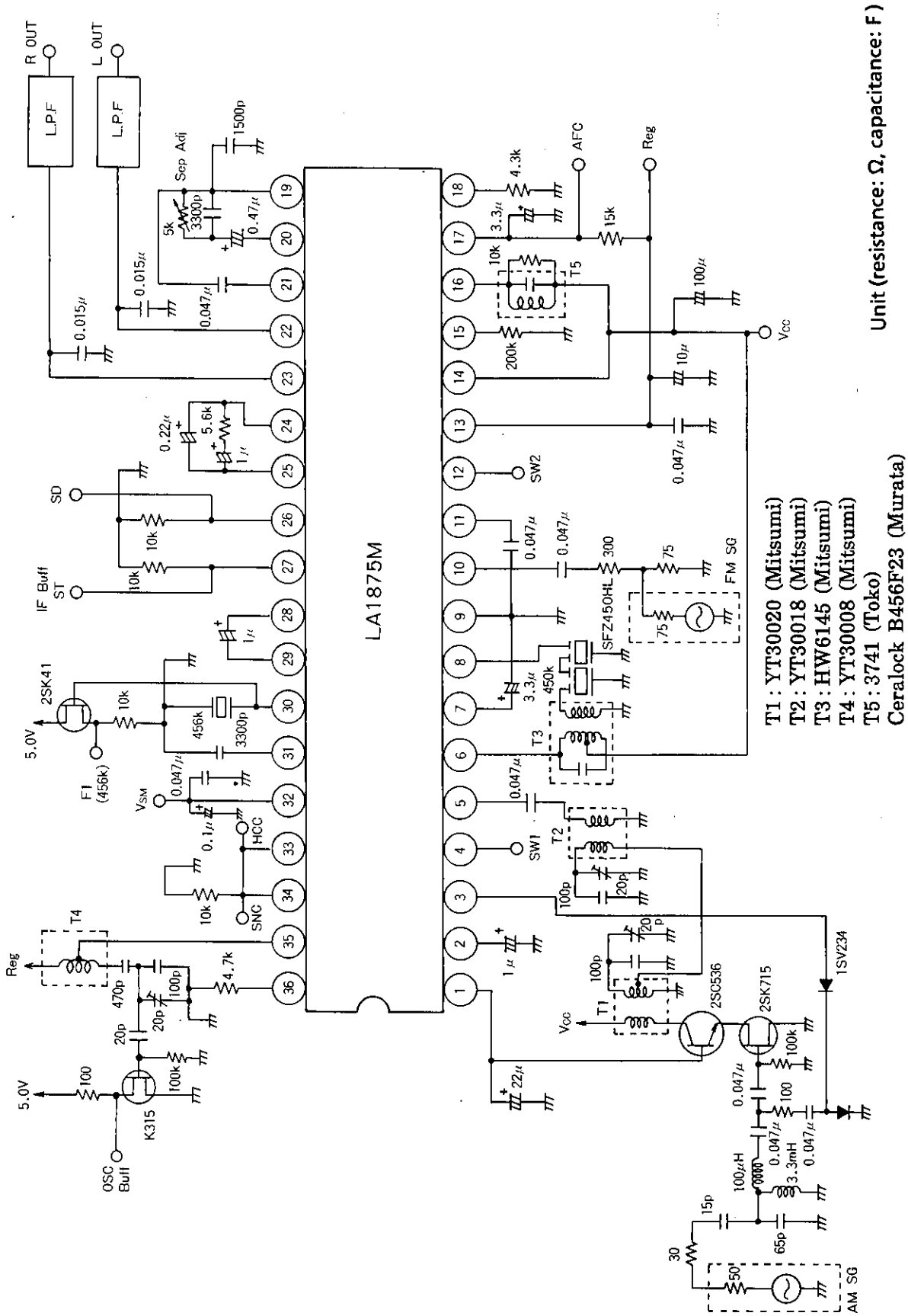

Sample Application Circuit

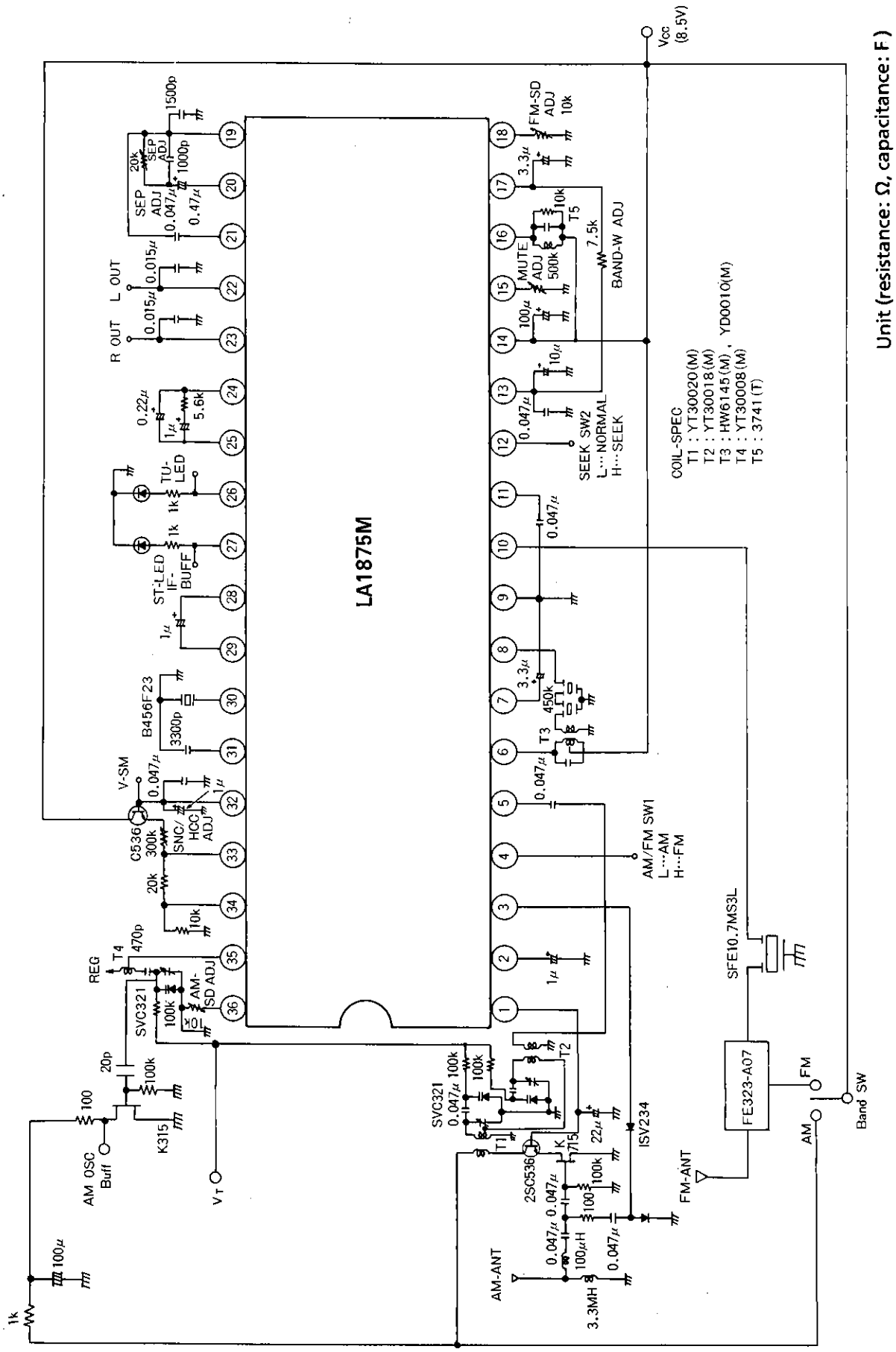

LA1875M Coil Specifications

T1 RF double tuning coil (Primary)

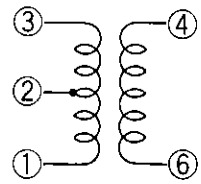

L1 – 3 = 224μH

YT-30020 (Mitsumi)
① – ② 2T
⑥ – ④ 37T
② – ③ 82T

T2 RF double tuning coil (Secondary)

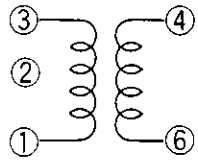

L1 – 3 = 224μH

YT-30018 (Mitsumi)
① – ② 2T
⑥ – ④ 15T
② – ③ 82T

T3 AM IFT Coil (Matching Coil for SFZ 450 HL3)

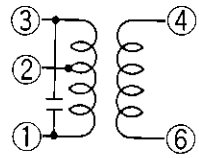

HW-6145 (Mitsumi)
③ – ② 67T $Q_O = 70 \pm 20\%$
② – ① 85T f = 450kHz
⑥ – ④ 10T internal 180pF

T4 AM OSC Coil

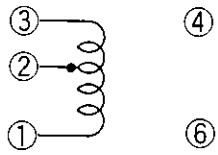

L1 – 3 = 118μH

YT-30008 (Mitsumi)
① – ② 29T
② – ③ 29T

T5 FM DET Coil

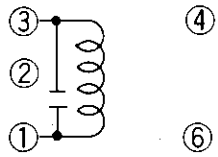

292TEAS-3741Z (Toko)
① – ③ 21T
f = 10.7MHz
internal 82pF
$Q_O = 38 \pm 20\%$

IC Internal Equivalent Circuit Diagrams

Unit (resistance: Ω)

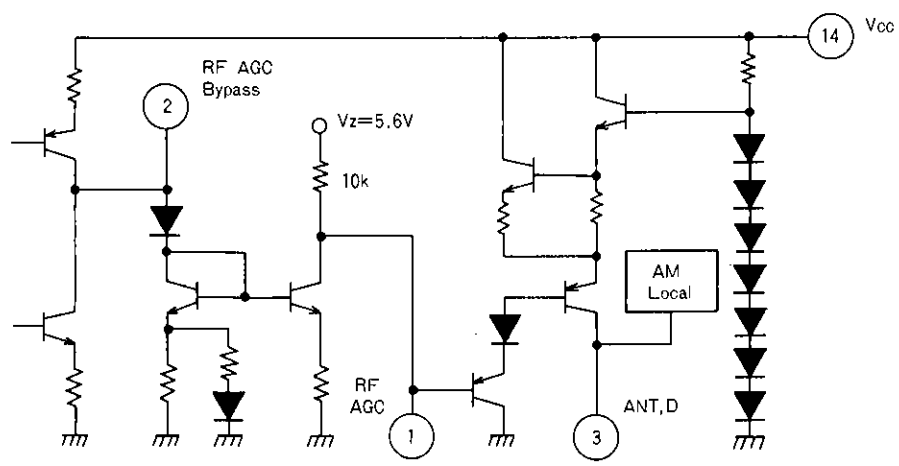

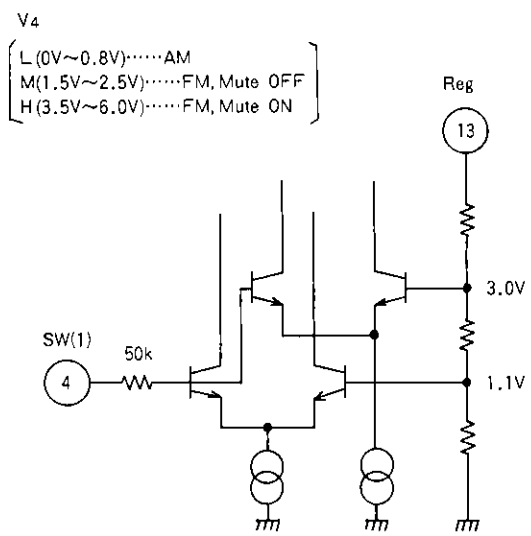

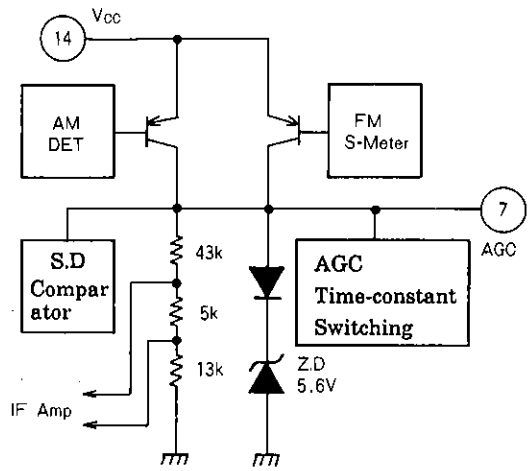

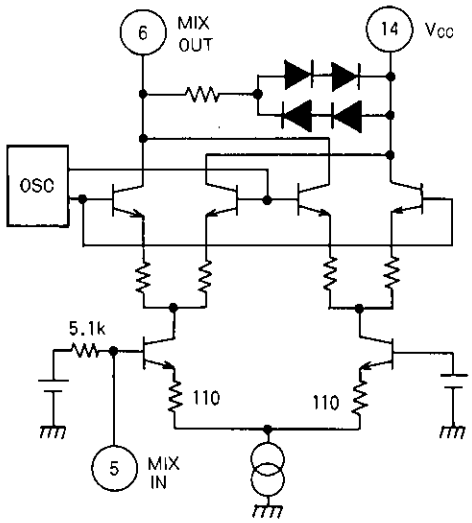

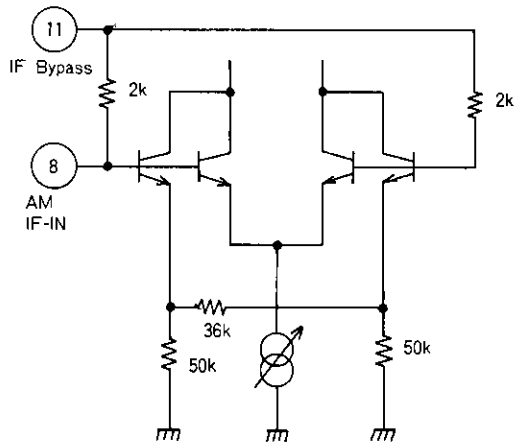

Continued on next page.

Continued from preceding page.

Unit (resistance: Ω)

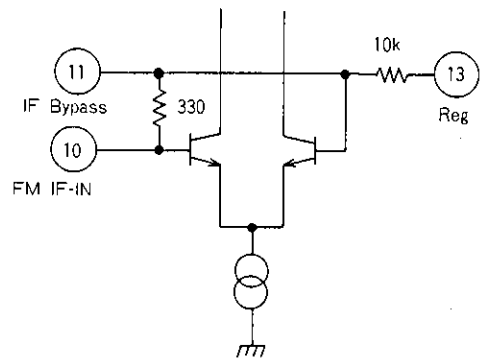

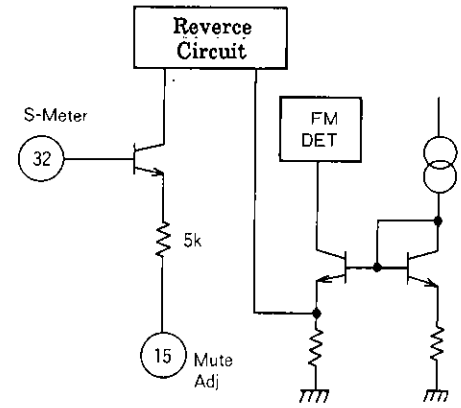

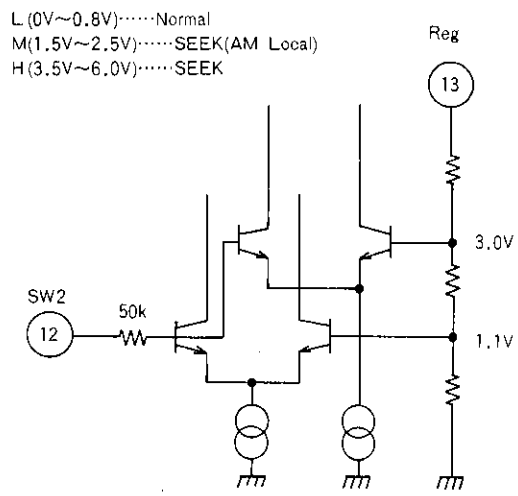

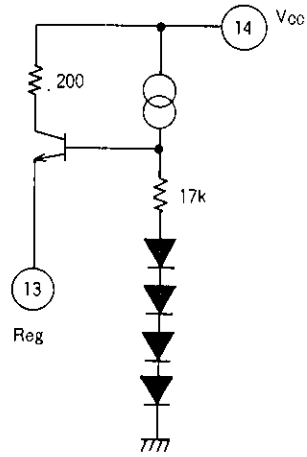

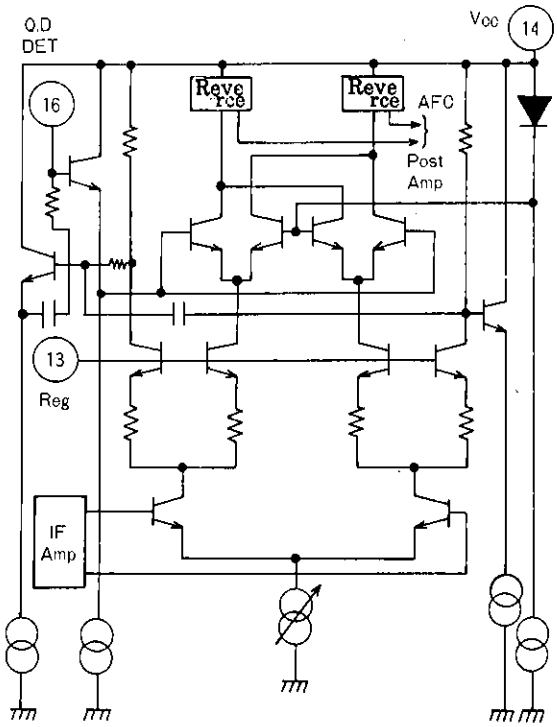

Continued on next page.

Continued from preceding page.

Unit (resistance: Ω)

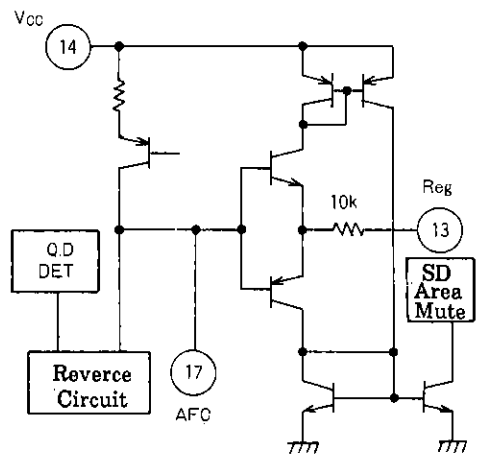

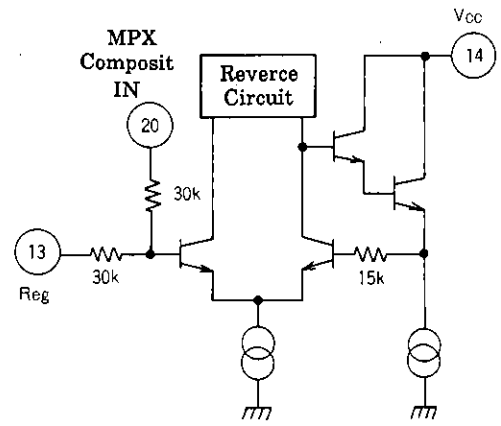

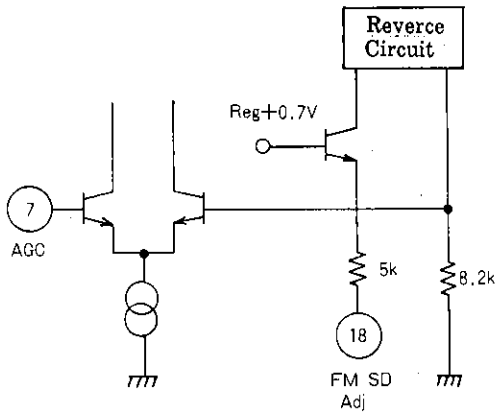

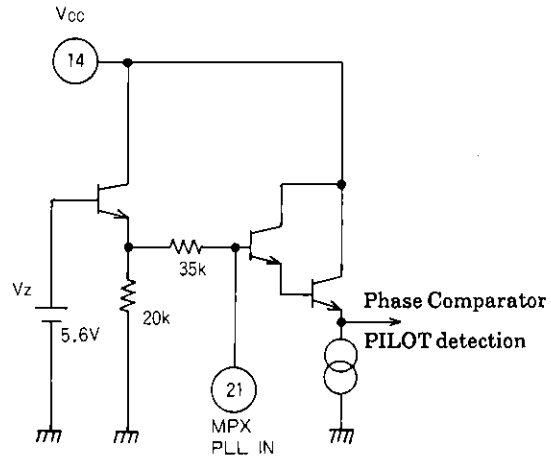

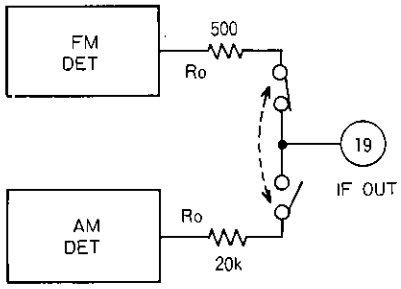

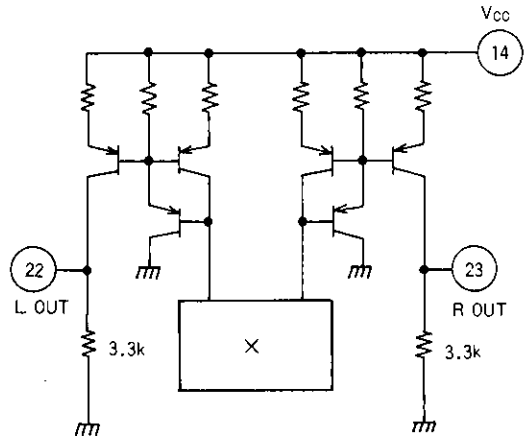

Continued on next page.

Continued from preceding page.

Unit (resistance: Ω)

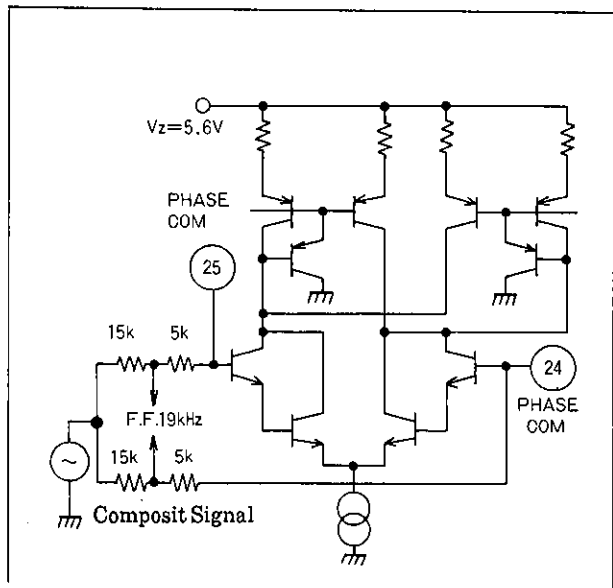

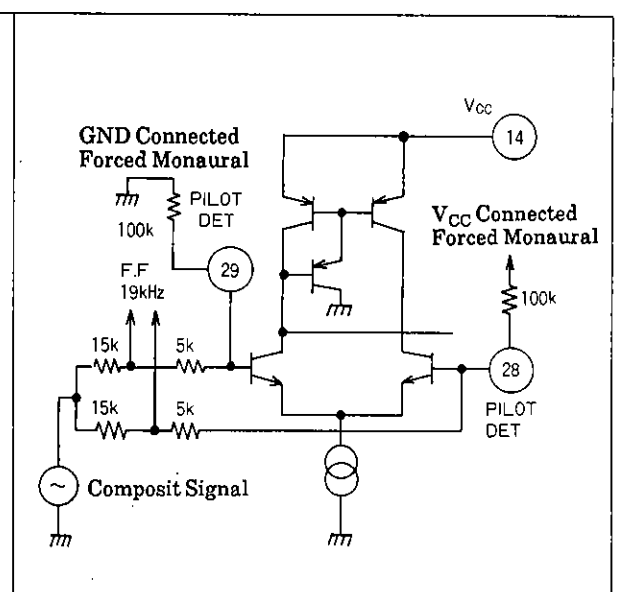

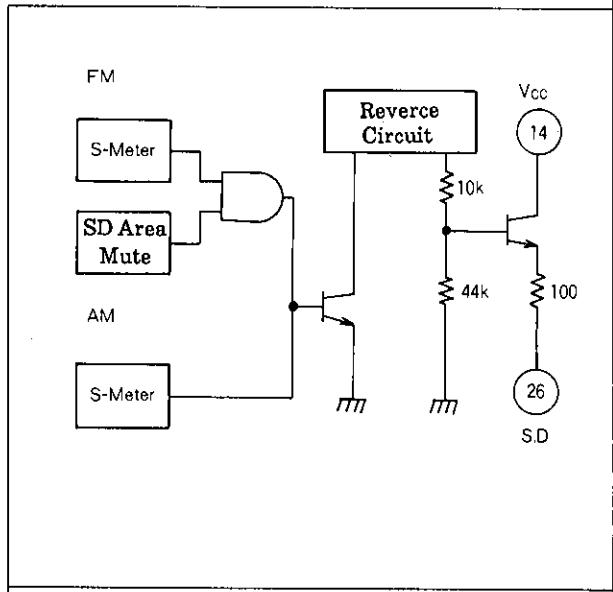

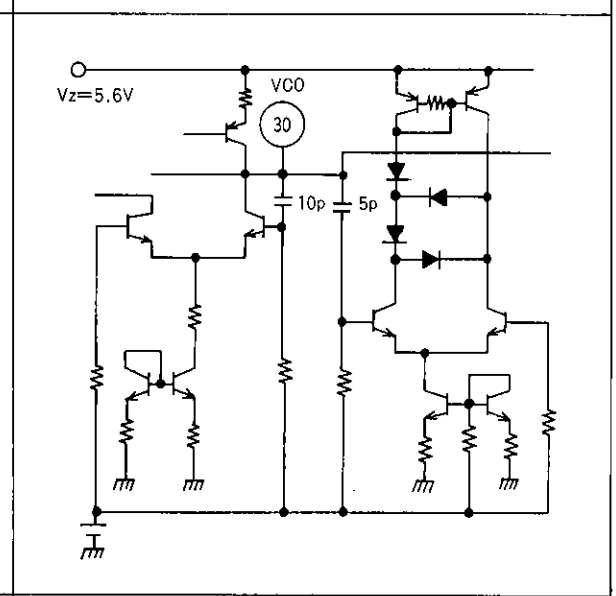

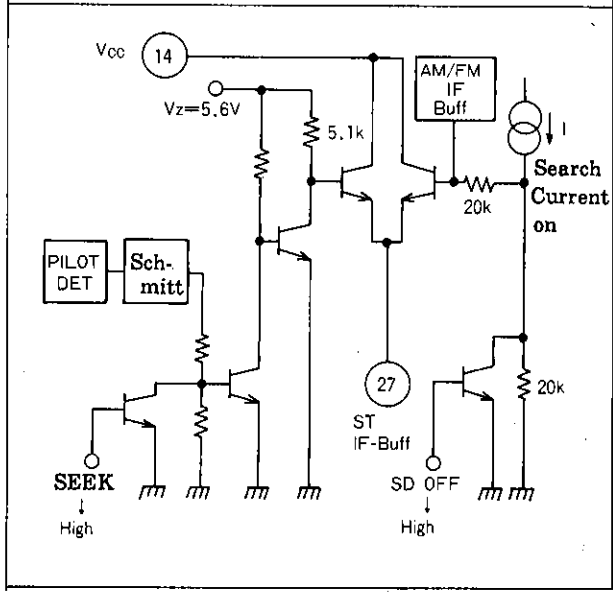

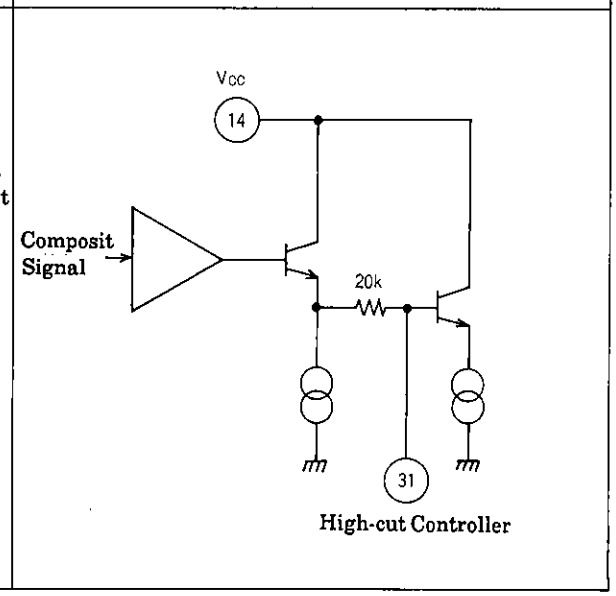

Continued on next page.

Continued from preceding page.

Unit (resistance: Ω)

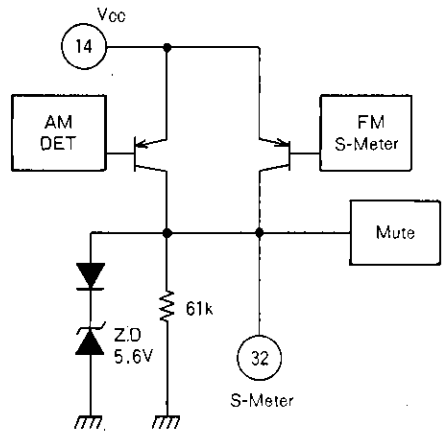

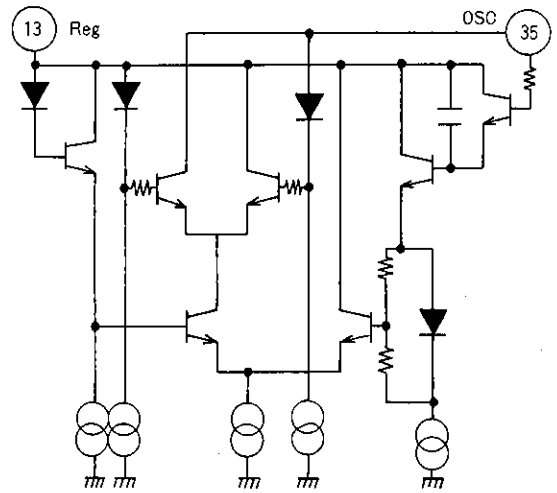

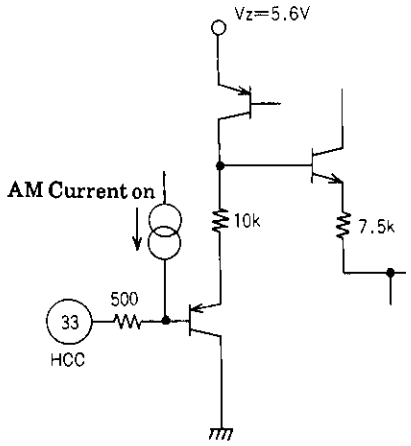

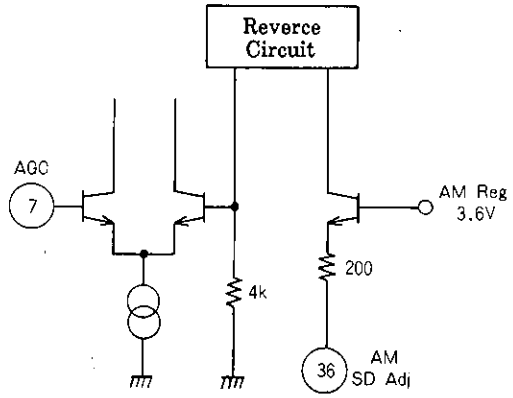

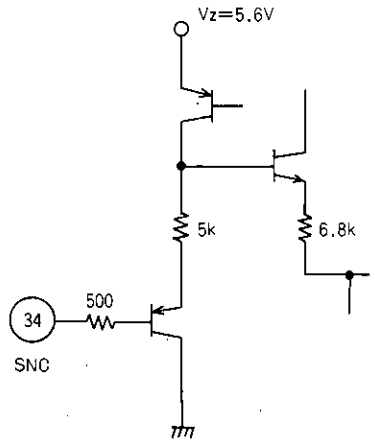

■ No products described or contained herein are intended for use in surgical implants, life-support systems, aerospace equipment, nuclear power control systems, vehicles, disaster/crime-prevention equipment and the like, the failure of which may directly or indirectly cause injury, death or property loss.

■ Anyone purchasing any products described or contained herein for an above-mentioned use shall:
① Accept full responsibility and indemnify and defend SANYO ELECTRIC CO., LTD., its affiliates, subsidiaries and distributors and all their officers and employees, jointly and severally, against any and all claims and litigation and all damages, cost and expenses associated with such use:
② Not impose any responsibility for any fault or negligence which may be cited in any such claim or litigation on SANYO ELECTRIC CO., LTD., its affiliates, subsidiaries and distributors or any of their officers and employees jointly or severally.

■ Information (including circuit diagrams and circuit parameters) herein is for example only; it is not guaranteed for volume production. SANYO believes information herein is accurate and reliable, but no guarantees are made or implied regarding its use or any infringements of intellectual property rights or other rights of third parties.