查询LA7116供应商 捷多邦，专业PCB打样工厂，24小时加急出货

Monolithic Linear IC

SANYO

No.2906A

LA7116

VCR Servo Interface

The LA7116 is a VCR servo interface IC that can be used in conjunction with the LC7412, 7413 to form a servo system with a good cost performance.

Functions

- Drum FG amp
- Capstan FG amp
- CTL amp
- Drum PG amp
- OP amp × 2

Features

- The OP amp section can be operated from a voltage of up to 12V.
- Selectable threshold voltage of CLT Schmitt section

Maximum Ratings at Ta = 25°C

				unit
Maximum Supply Voltage	V_{CC} 1		7.0	V
	V_{CC} 2		15.0	V
Allowable Power Dissipation	Pd max	Ta ≦ 65°C	200	mW
Operating Temperature	Topr		−15 to +65	°C
Storage Temperature	Tstg		−40 to +125	°C

Operating Conditions at Ta = 25°C

			unit
Recommended Supply Voltage	V_{CC}	5.0	V
Operating Voltage Range	V_{CC} op1	4.5 to 5.5	V
	V_{CC} op2	4.5 to 13.0	V

Operating Characteristics at Ta = 25°C, V_{CC} = 5V

			min	typ	max	unit
Circuit Current	I_{CC} 1	Quiescent, no load	2.0	4.0	6.0	mA
CTL Amp Bias Voltage	V_5	Quiescent, no load	2.4	2.5	2.6	V
PG Amp Bias Voltage	V_{15}	Quiescent, no load	2.4	2.5	2.6	V
PG Amp Bias Voltage	V_{16}	Quiescent, no load	2.4	2.5	2.6	V
	V_{21}	Quiescent, no load	2.4	2.5	2.6	V
Reference Voltage	V_{20}	Quiescent, no load	2.4	2.5	2.6	V

Continued on next page.

Package Dimensions 3067
(unit : mm)

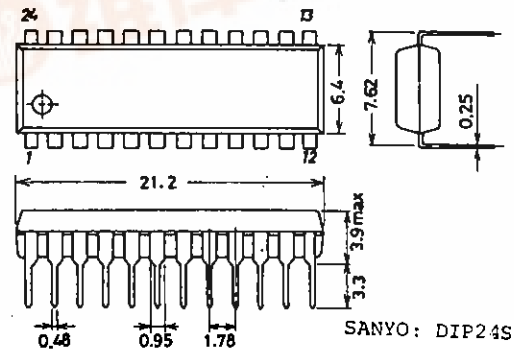

SANYO: DIP24S

找PDF 维库一下 pdf.dzsc.com

Continued from preceding page.

			min	typ	max	unit
CTL Output Voltage	V_{OHCTL}	$I_1 = +0.5mA$	4.0			V
	V_{OLCTL}	$I_1 = -0.5mA$			1.0	V
PG Output Voltage	V_{OHPG}	$I_{14} = +0.5mA$	4.0			V
	V_{OLPG}	$I_{14} = -0.5mA$			1.0	V
FG Output Voltage	V_{OHFG1}	$I_{18} = +0.5mA$	4.0			V
	V_{OLFG1}	$I_{18} = -0.5mA$			1.0	V
	V_{OHFG2}	$I_{23} = +0.5mA$	4.0			V
	V_{OLFG2}	$I_{23} = -0.5mA$			1.0	V
CTL Amp Gain	G_{CTL}	SG1:500Hz,1Vp-p,V_3=1Vp-p	48	50	52	dB
CTL Amp Frequency Characteristic	ΔG_{CTL}	SG1:10Hz,1Vp-p,V_3=1Vp-p	−6	−2		dB
FG Amp Gain	G_{FG1}	SG3:500Hz,1Vp-p,V_{17}=1Vp-p	46	48	50	dB
	G_{FG2}	SG4:500Hz,1Vp-p,V_{22}=1Vp-p	46	48	50	dB
FG Amp Frequency Characteristic	ΔG_{FG1}	SG3:20kHz,1Vp-p, V_{17}=1Vp-p	−10	−6		dB
	ΔG_{FG2}	SG4:20kHz,1Vp-p, V_{22}=1Vp-p	−10	−6		dB
PG Schmitt Width	V_{HPG}	SG2:500Hz	48	60	72	mVp-p
FG Schmitt Width	V_{HFG1}	SG3:500Hz	185	230	275	mVp-p
	V_{HFG2}	SG4:500Hz	185	230	275	mVp-p
CTL Schmitt Width	V_{HCTL1}	SG1:500Hz,S1=a	160	200	240	mVp-p
CTL Schmitt Width (Search)	V_{HCTL2}	SG1:500Hz,S1=b	320	400	480	mVp-p
CTL Schmitt Width (Slow)	V_{HCTL3}	SG1:500Hz,S1=c	+72	+92	+112	mV
CTL Schmitt Width (Slow)	V_{HCTL4}	SG1:500Hz,S1=c	+34	+54	+70	mV
CTL Schmitt Width Switching Level	V_{24H}	S1=d	3.0	3.5	4.0	V
	V_{24L}	S1=d	1.0	1.5	2.0	V
[OP Amp Characteristics] at V_{CC}=5 to 12V						
Circuit Current	$I_{CC}2$		0.3	0.8	1.2	mA
Input Offset Voltage	$V_{IO}1$			±2	±7	mV
	$V_{IO}2$			±2	±7	mV
Input Offset Current	$I_{IO}1$			±5	±50	nA
	$I_{IO}2$			±5	±50	nA
Input Bias Current	I_B1			45	250	nA
	I_B2			45	250	nA
Output Current (Souce)	$I_{OSOC}1$		10			mA
	$I_{OSOC}2$		10			mA
Output Current (Sink)	$I_{OSNK}1$		10			mA
	$I_{OSNK}2$		10			mA
Common-Mode Input Voltage Range	V_{1CM}		0	V_{CC} to 1.5		V
Output Voltage Range	V_{OUT}		0	V_{CC} to 1.5		V

Equivalent Circuit Block Diagram

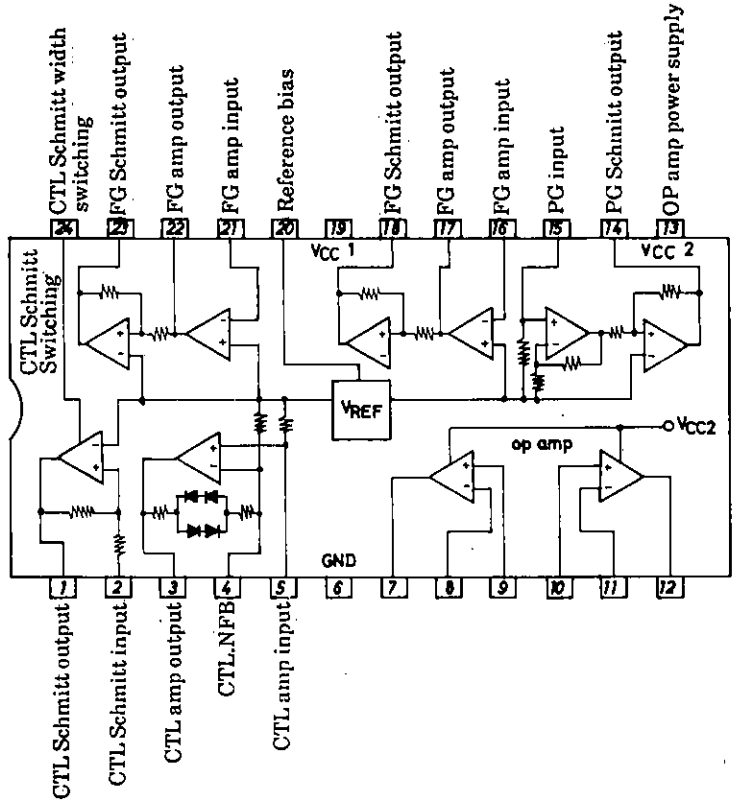

Sample Application Circuit

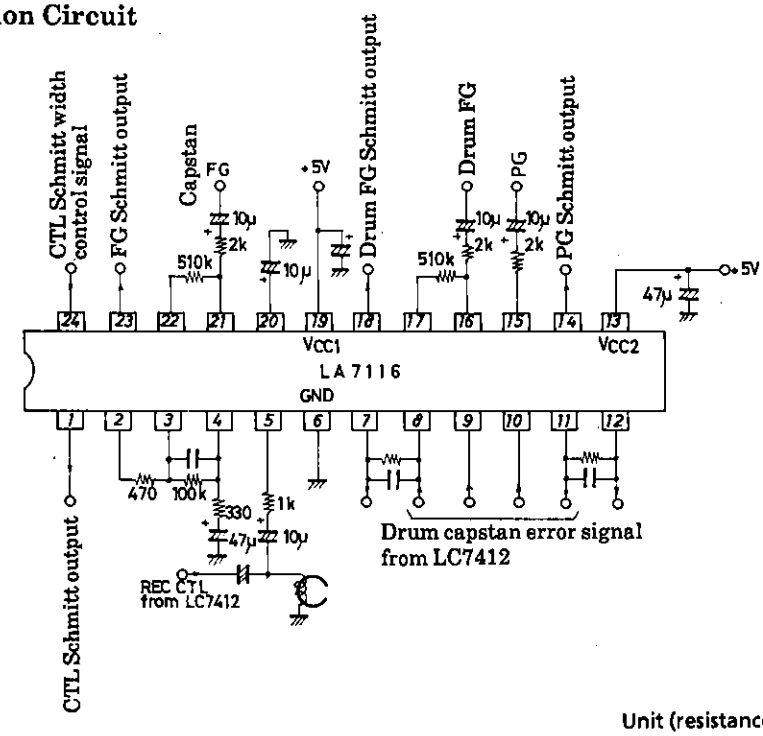

Unit (resistance : Ω , capacitance : F)

■ No products described or contained herein are intended for use in surgical implants, life-support systems, aerospace equipment, nuclear power control systems, vehicles, disaster/crime-prevention equipment and the like, the failure of which may directly or indirectly cause injury, death or property loss.

■ Anyone purchasing any products described or contained herein for an above-mentioned use shall:
① Accept full responsibility and indemnify and defend SANYO ELECTRIC CO., LTD., its affiliates, subsidiaries and distributors and all their officers and employees, jointly and severally, against any and all claims and litigation and all damages, cost and expenses associated with such use:
② Not impose any responsibility for any fault or negligence which may be cited in any such claim or litigation on SANYO ELECTRIC CO., LTD., its affiliates, subsidiaries and distributors or any of their officers and employees jointly or severally.

■ Information (including circuit diagrams and circuit parameters) herein is for example only; it is not guaranteed for volume production. SANYO believes information herein is accurate and reliable, but no guarantees are made or implied regarding its use or any infringements of intellectual property rights or other rights of third parties.

This catalog provides information as of **December, 1996**. Specifications and information herein are subject to change without notice.