查询LA7629供应商 捷多邦，专业PCB打样工厂，24小时加急出货

SANYO

No.2837A

LA7629

Monolithic Linear IC

Color TV/Video, Chroma, Deflection Circuit

DISCONTINUED PRODUCT

The LA7629 is a small-sized multifunctional IC containing the "video, chroma, deflection" circuit of NTSC color TV in a DIP30S (equivalent to the DIP22 package heretofore in use) of shrink type. Besides being small-sized, it has such features as greatly reduced number of parts and fewer adjustments required. The LA7629 can be used in conjunction with the LA7520N,7555 for "VIF·SIF" use or the LA7830,7831, 7835,7836 for "vertical output" use to perform all color TV signal processing functions.
The polarity of the quadratic differentiation circuit input of the LA7629 is inverted to facilitate easy connection of a Tr,L,C,R-used circuit for higher picture quality to the quadratic differentiation circuit input of the video circuit. The LA7629 containing a wide-band video circuit (10MHz) is suited for use in AV sets or large-sized sets.

Features

- Wide-band video circuit (10MHz)
- Small-sized package
- Minimum number of parts required
- Fewer adjustments required (non-adjusting of functions shown below)
  - Chroma VCO (APC)
  - Horizontal OSC H-Hold
  - Vertical OSC H-Hold
- Multifunction

Maximum Ratings at Ta = 25°C

				unit
Maximum Supply Voltage	V_{16} max		14.0	V
Maximum Supply Current	I_{22} max		15.0	mA
Allowable Power Dissipation	Pd max	Ta ≤ 65°C	1100	mW
Operating Temperature	Topg		−20 to +85	°C
Storage Temperature	Tstg		−55 to +125	°C

Operating Conditions at Ta = 25°C

			unit
Recommended Supply Voltage	V_{16}	12.0	V
Recommended Supply Current	I_{22}	10.0	mA
Operating Voltage Range	V_{16}op	9.0 to 14.0	V
Operating Current Range	I_{22} op	8.5 to 15.0	mA

The application circuit diagrams and circuit constants herein are included as an example and provide no guarantee for designing equipment to be mass-produced.
The information herein is believed to be accurate and reliable. However, no responsibility is assumed by SANYO for its use, nor for any infringements of patents or other rights of third parties which may result from its use.

Case Outline 3061-D30SIC
(unit : mm)

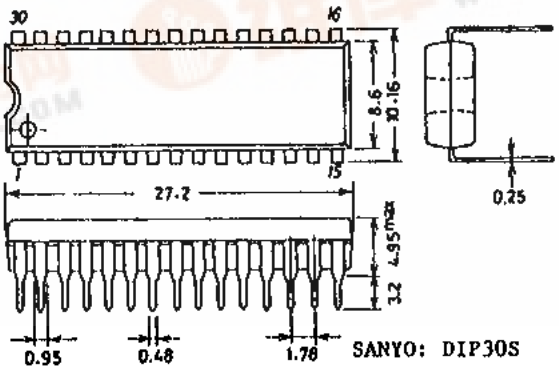

SANYO: DIP30S

Specifications and information herein are subject to change without notice.

SANYO Electric Co.,Ltd. Semiconductor Overseas Marketing Div.
Natsume Bldg., 18-6, 2-chome, Yushima, Bunkyo-ku, TOKYO 113 JAPAN

找PDF 鲸 pdf.dzsc.com

Operating Characteristics at Ta = 25°C, $V_{CC} = V_{16} = 12V$, $I_{CC} = I_{22} = 10mA$

			min	typ	max	unit
Circuit Current	I_{16}	Quiescent	40	53	75	mA
[Deflection Block]						
Horizontal Supply Voltage	V_{Z22}		8.2	8.7	9.2	V
Sync Separation Input DC Level	$V_{S.S}$		9.0	9.3	9.6	V
Vertical Free-Running Frequency1	f_{V1}			fH/296.5		Hz
Vertical Free-Running Frequency2	f_{V2}			fH/224.5		Hz
Vertical Blanking Pulse Width	PW V.blk			19.25/fH		sec
Vertical Output Pulse Width	PW V.out			10.25/fH		sec
Vertical Drive Stage Voltage Gain	G_V		13	16.2	19	dB
Vertical Output Pulse Start Voltage	Vcds				4.0	V
Vertical Pull-in Start Voltage	V_{vps}				4.0	V
Vertical Blanking Pulse Peak Value	VV.blk			10		V
Horizontal Free-Running Frequency	fH	Diff. bet. 15.734kHz and hor. output freq.	−70	30	130	Hz
Horizontal OSC Frequency Change with Line Regulation	ΔfH(V)	fH(8V) − fH(7V)	−10	0	10	Hz
Horizontal OSC Frequency Change with Ambient Temperature	ΔfH/ΔT	Ta = −10 to 60°C	−1.5		1.5	Hz/°C
Horizontal Output Pulse Width	PW H.out		23.5	24.5	25.5	μs
Horizontal Sync Pull-in Range	fH pull	Deviation from 15.734kHz	±400			Hz
Horizontal Output Pulse Start Voltage	V_H pos				5.5	V
Horizontal Free-Running Frequency Secular Drift	Δf_{HT}	5sec to 30min after power ON	−50	−10	30	Hz
Horizontal Blanking Threshold Level	V_H blk		11			V
Horizontal Output Drive Current	$I_{H.O}$		2.0		4.5	mA
Horizontal OSC Control Sensitivity	BfH	Reference value		236		Hz/μs
Hold-down Start Input Voltage	V_{HD}		0.55	0.65	0.75	V
[Video Block]						
Video Tone Voltage Gain	G tone	f = 2MHz, video tone VR:12V	7	9.6	12	dB
Video Voltage Gain	AV	f = 100kHz, video tone VR:12V	12	15	18	dB
Contrast Control Center	eo	f = 100kHz, input:100mVp-p	0.2	0.3	0.4	Vp-p
Contrast Variable Range	Δeo	f = 100kHz	16	18	20	dB
Bright Control Characteristic 1	BR1	Quiescent, bright VR:3V	8			V
Bright Control Characteristic 2	BR2	Quiescent, bright VR:6V	5.8	6.3	6.8	V
Bright Control Characteristic 3	BR3	Quiescent, bright VR:9V			4.5	V
Frequency Characteristic	f			10		MHz
DC Transmission	R_{DC}	Stair step signal		100		%

Continued on next page.

DISCONTINUED PRODUCT

Continued from preceding page.

			min	typ	max	unit
[Chroma Block]						
ACC Amplitude Characteristic 1	ACC1	Input: +6dB	−3	0	+3	dB
ACC Amplitude Characteristic 2	ACC2	Input: −20dB	−7		+2	dB
ACC Phase Characteristic 1	ACCø1	Input: +6dB	−3		+3	deg
ACC Phase Characteristic 2	ACCø2	Input: −20dB	−7		+2	deg
Killer Operation Point	EK			−40		dB
Color Control Center	B-Y cen	Output B-Y: color VR 6V	2.9	4.3	5.5	Vp-p
Maximum Demodulation Output	B-Y max	Output B-Y: color VR 12V	5.5	6.5		Vp-p
Color Contrast Variable Range	ΔG cont	Output B-Y	15.7	17.0	18.5	dB
Tint Center	T cen	Output B-Y: tint VR	−17	−5	+7	deg
Tint Variable Range	ΔT	Output B-Y	+45 −35			deg
APC Pull-in Range	ΔfAPC		±300			Hz
Demoduration Output Ratio 1	R-Y/B-Y		0.81	0.90	0.98	
Demoduration Output Ratio 2	G-Y/B-Y		0.24	0.30	0.38	
Demodulation Angle 1	∠R-Y/B-Y Tint VR 6V		96	104	112	deg
Demodulation Angle 2	∠G-Y/B-Y Tint VR 6V		−132	−122	−112	deg
Color Difference Output DC Voltage	V9, 10, 11		6.7	7.2	7.7	V
Color Difference Output DC Difference Voltage	ΔV9, 10, 11		−200		+200	mV

Equivalent Circuit Block Diagram and Sample Peripheral Circuit

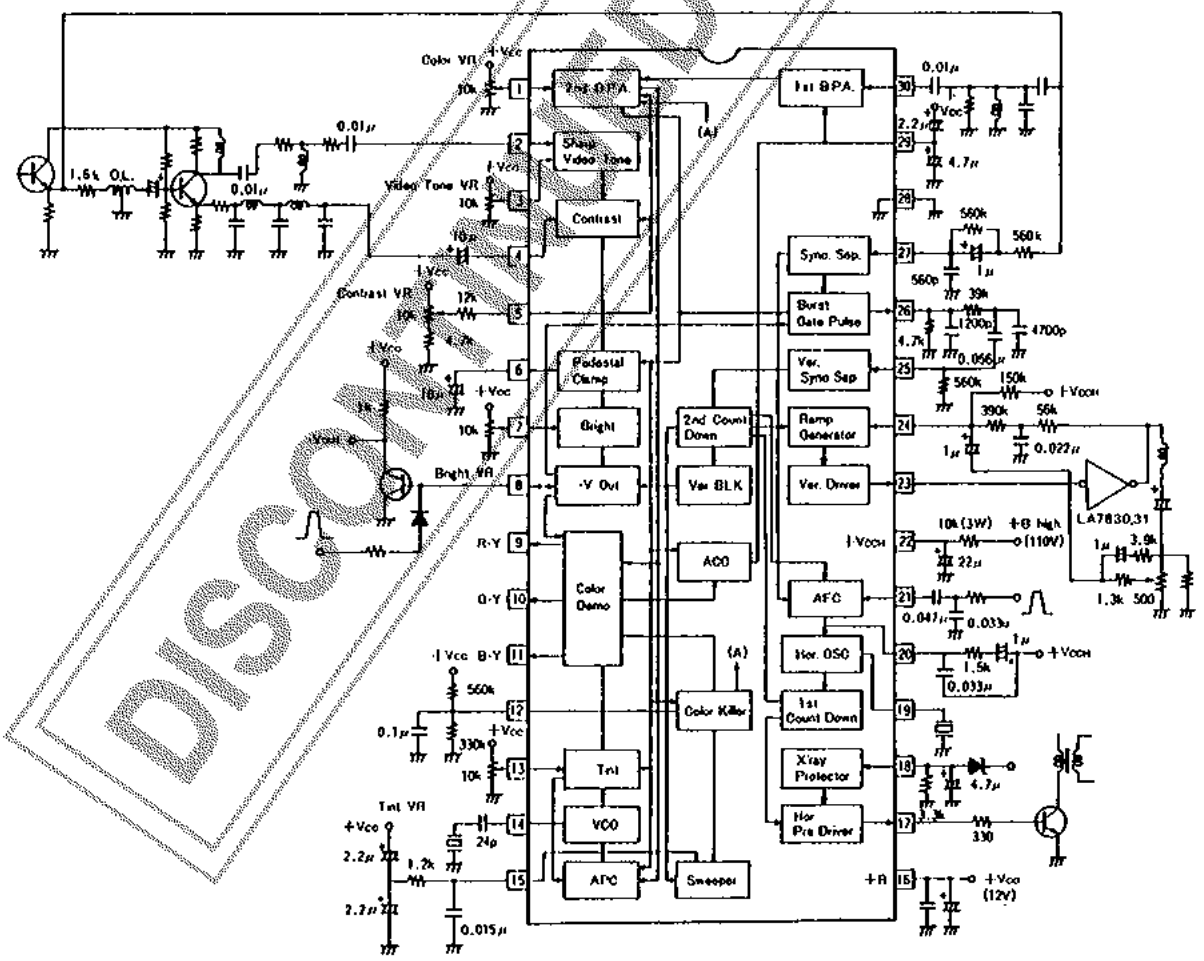

DISCONTINUED PRODUCT

Sample Application
where the LA7629 is used in conjunction with a vertical output IC (LA7830, 7831)

With vertical stabilization circuit

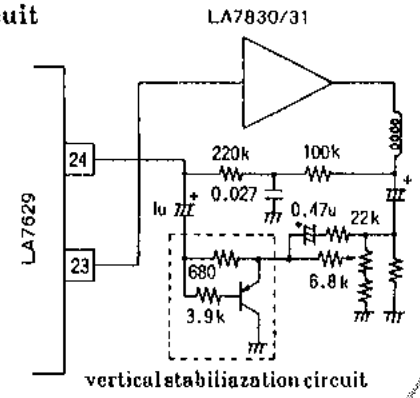

Sample Application
where the LA7629 is used in conjunction with a vertical output IC (LA7835, 7836)

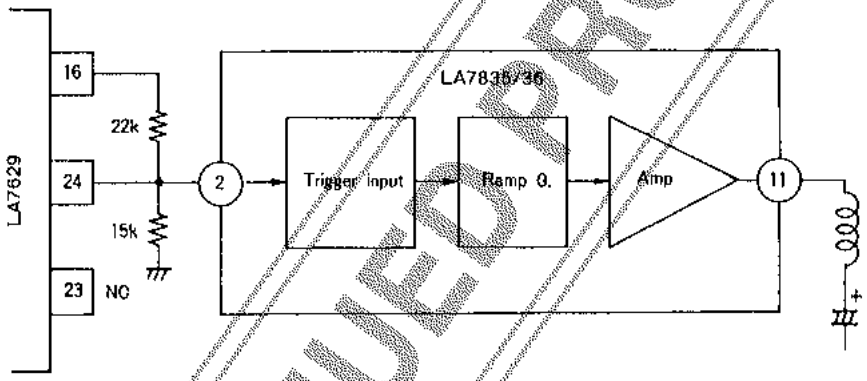

For "Y.Chroma.Def." ICs for CTV NTSC use, the following types are available.
Select the IC most suited for your intended CTV set.

Type No.	Peak clip	DC restoration	Quadratic differentiation circuit input polarity	Video tone		Remarks
				Soft	Sharp	
LA7620	○	70%	Positive	○	○	
LA7621	×	70%	Positive	○	○	
LA7625	○	100%	Positive	○	○	
LA7626	×	100%	Positive	○	○	
LA7629	×	100%	*Negative	×	○	Video band 10MHz

* Inverting amp required

DISCONTINUED PRODUCT