查询LA76828N供应商 捷多邦，专业PCB打样工厂，24小时加急出货

Ordering number : ENN*8048

Preliminary

SANYO Semiconductors
DATA SHEET

LA76828N — Monolithic Linear IC
I^2C Bus Control IC

Overview

The LA76828N is I^2C bus controller ICs that support the different TV broadcast formats used worldwide and aim for rationalization of color TV set design, improved manufacturability, and lower total costs

Features

- Single crystal multiformat system that supports the different TV broadcast formats used worldwide
  Multiformat system : LA76828N (YCbCr and E/W support)
- Adjustment-free VIF/SIF, audio trap/audio bandpass filters
- Adjustment-free horizontal resonator system
- Simplified SG
- Supply voltage : V_{CC} = 5V/9V
- VIF/SIF
  Adjustment-free VCO, 4-mode audio trap/audio bandpass filter, buzz canceller
  RF AGC/video level
  SIF system automatic discrimination (The LA7973 is used as the automatic discrimination IC.)
- Single crystal color system : PAL, NTSC, SECAM (The LA7642N is used as the SECAM decoder.)
- Black stretch, sharpness control with coring on/off control, built-in variable Y system filters
  (Y-DL and chrominance trap)
- Chrominance bandpass filter, demodulation ratio and angle control
- E/W support

■ Any and all SANYO products described or contained herein do not have specifications that can handle applications that require extremely high levels of reliability, such as life-support systems, aircraft's control systems, or other applications whose failure can be reasonably expected to result in serious physical and/or material damage. Consult with your SANYO representative nearest you before using any SANYO products described or contained herein in such applications.

■ SANYO assumes no responsibility for equipment failures that result from using products at values that exceed, even momentarily, rated values (such as maximum ratings, operating condition ranges, or other parameters) listed in products specifications of any and all SANYO products described or contained herein.

找PDF 维库一下 pdf.dzsc.com

SANYO Electric Co.,Ltd. Semiconductor Company
TOKYO OFFICE Tokyo Bldg., 1-10, 1 Chome, Ueno, Taito-ku, TOKYO, 110-8534 JAPAN

Package Dimensions

unit : mm

3273

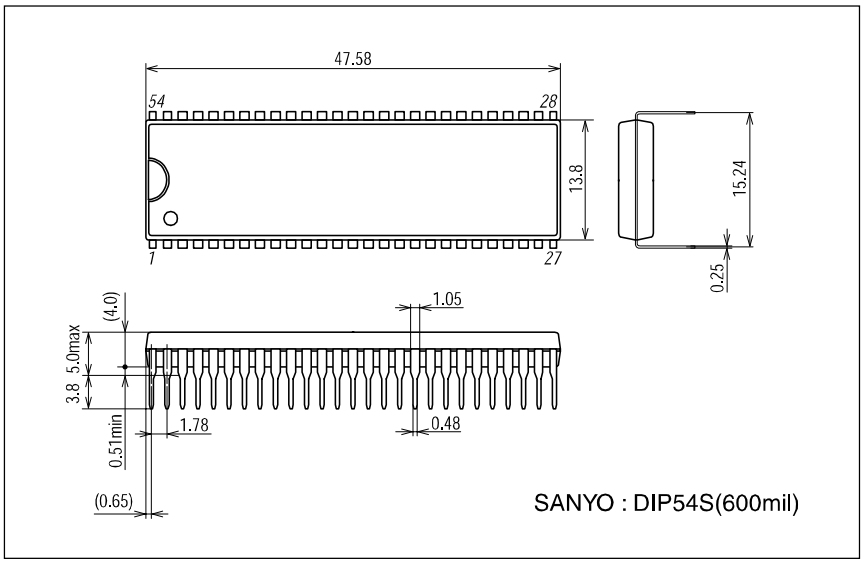

Block Diagram

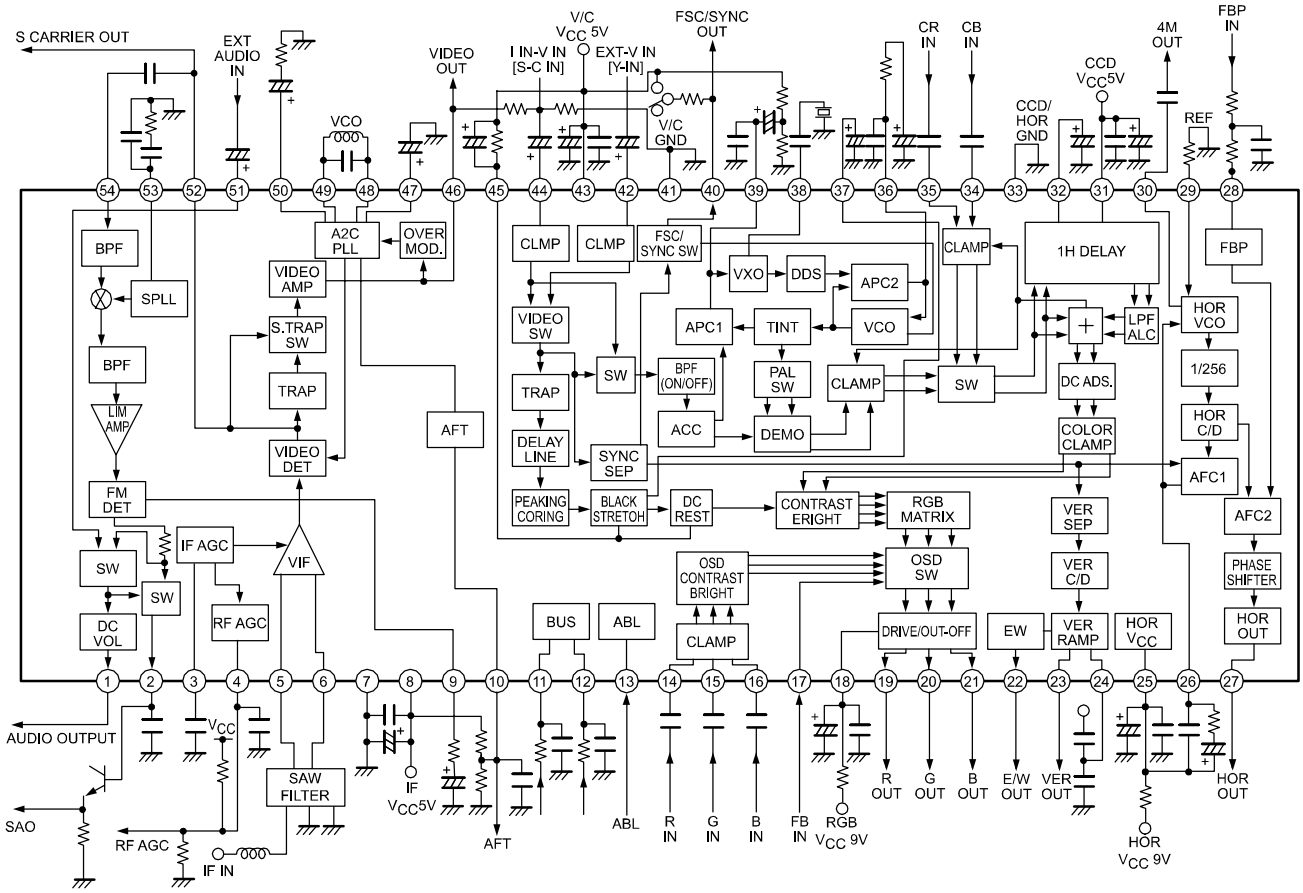

■ Specifications of any and all SANYO products described or contained herein stipulate the performance, characteristics, and functions of the described products in the independent state, and are not guarantees of the performance, characteristics, and functions of the described products as mounted in the customer's products or equipment. To verify symptoms and states that cannot be evaluated in an independent device, the customer should always evaluate and test devices mounted in the customer's products or equipment.

■ SANYO Electric Co., Ltd. strives to supply high-quality high-reliability products. However, any and all semiconductor products fail with some probability. It is possible that these probabilistic failures could give rise to accidents or events that could endanger human lives, that could give rise to smoke or fire, or that could cause damage to other property. When designing equipment, adopt safety measures so that these kinds of accidents or events cannot occur. Such measures include but are not limited to protective circuits and error prevention circuits for safe design, redundant design, and structural design.

■ In the event that any or all SANYO products(including technical data,services) described or contained herein are controlled under any of applicable local export control laws and regulations, such products must not be exported without obtaining the export license from the authorities concerned in accordance with the above law.

■ No part of this publication may be reproduced or transmitted in any form or by any means, electronic or mechanical, including photocopying and recording, or any information storage or retrieval system, or otherwise, without the prior written permission of SANYO Electric Co., Ltd.

■ Any and all information described or contained herein are subject to change without notice due to product/technology improvement, etc. When designing equipment, refer to the "Delivery Specification" for the SANYO product that you intend to use.

■ Information (including circuit diagrams and circuit parameters) herein is for example only ; it is not guaranteed for volume production. SANYO believes information herein is accurate and reliable, but no guarantees are made or implied regarding its use or any infringements of intellectual property rights or other rights of third parties.

This catalog provides information as of August, 2004. Specifications and information herein are subject to change without notice.