Ordering number : EN 1487B

Monolithic Linear IC

SANYO

No. 1487B

# LA7808

## B/W TV Synchronization, Deflection Circuit

The LA7808 contains a sync separator.

**Maximum Ratings** at Ta=25°C

| | | | | unit |
|---|---|---|---|---|
| Maximum Supply Voltage | V1 | | 14.0 | V |
| | V7 | | 14.0 | V |
| Allowable Power Dissipation | Pdmax | Ta≦60°C | 300 | mW |
| Operating Temperature | Topr | | -20 to +85 | °C |
| Storage Temperature | Tstg | | -55 to +125 | °C |

**Recommended Operating Condition** at Ta=25°C

| | | | unit |
|---|---|---|---|
| Recommended Supply Voltage | V1 | 12.0 | V |
| | V7 | 12.0 | V |

**Operating Characteristics** at Ta=25°C, V1=V7=12V

| | | | min | typ | max | unit |
|---|---|---|---|---|---|---|
| $V_{CC1}$ Current Dissipation | $I_{CC1}$ | | 6.0 | | 11.0 | mA |
| $V_{CC2}$ Current Dissipation | $I_{CC7}$ | | 3.8 | | 7.1 | mA |
| Sync Separation Input DC Level | | | 9.0 | | 9.6 | V |
| Sync Signal Peak Value | | | 11.0 | | | V |
| Horizontal DC Loop Gain | | + sign at $V_2$=5V, - sign at $V_2$=1V | ±240 | | ±400 | μA |
| Horizontal Free-Running Frequency | $f_H$ | $f_H$ center=15.750kHz | -750 | | 750 | Hz |
| Horizontal Oscillation Start Voltage | | | | | 4.0 | V |
| Increased/Reduced Voltage Characteristic of Horizontal Frequency | | V1=12±1V (15.750kHz at 12V) | -50 | | 50 | Hz/V |
| Temperature Characteristic of Horizontal Frequency | | Ta=-10 to +60°C | -2.20 | | 1.22 | Hz/°C |
| Horizontal Frequency Warm-up Drift | | 5s to 30min. after switch ON | -90 | | 50 | Hz |
| Horizontal Output Pulse Width | | Positive pulse period | 21.5 | | 26.5 | μs |
| Horizontal Output Drive Current | | | 4.2 | | 7.8 | mA |

**Package Dimensions**
(unit : mm)
3017C

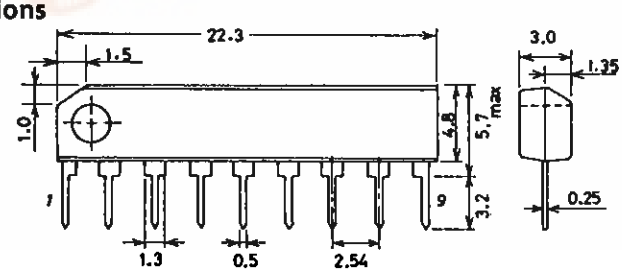


SANYO : SIP9

**Sample Application Circuit :** Sync, Deflection Circuit

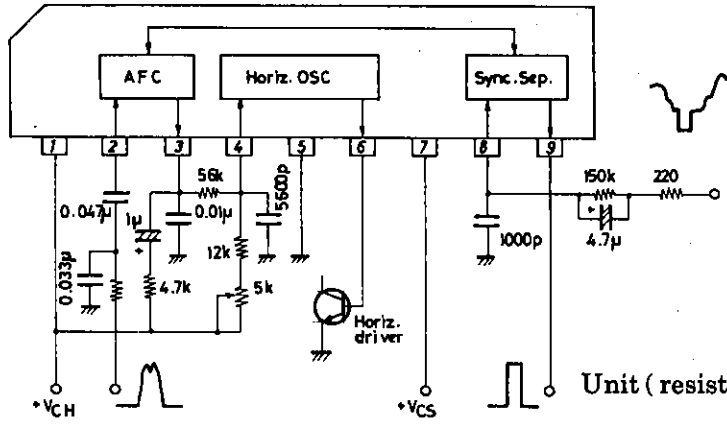


Unit ( resistance:Ω, capacitance:F )