LB1609

T-52-13-25

3006B

Monolithic Digital IC

Compact DC Motor Driver

ED2999A

Use

- Control of rotational speed of tachometer generator-provided compact DC motor used in cassette tape recorder, tape recorder, FDD, etc.

Features

- Applicable to various motors from small motors to large motors by selecting an external PNP transistor
- The motor control pin can be used to turn OFF an external PNP transistor (stop mode).
- Also applicable to hall motors

Absolute Maximum Ratings at Ta=25°C

			unit
Maximum Supply Voltage	V_{CC} max	-0.3 to +17	V
Maximum Output Current	I_{OUT}	-30	mA
Allowable Power Dissipation	Pd max	600	mW
Operating Temperature	Topg	-10 to +60	°C
Storage Temperature	Tstg	-30 to +125	°C

Allowable Operating Conditions at Ta=25°C

			unit
Supply Voltage	V_{CC}	8 to 16	V
FG Input Voltage	V_{iFG}	3	Vp-p

Electrical Characteristics at Ta=25°C, V_{CC}=12V

			min	typ	max	unit
Current Dissipation	I_{CC}			8.5	15	mA
Vref Output Voltage	Vref	Iref=0	4.5	5.0	5.5	V
Vref Output Voltage Load Regulation	ΔVref	Iref=0 to 12mA	-0.2	-0.05		V
Preamp Input Pin Bias Current	I_B	Pin 16 GND	-0.05	-0.02		uA
Preamp Offset Voltage	V_{OFF}	Measured in closed-loop mode		±2		mV
Schmitt Input Voltage Hysteresis Width	Vhy			100	200	mV

Continued on next page.

Case Outline 3006B-D16IC
(unit:mm)

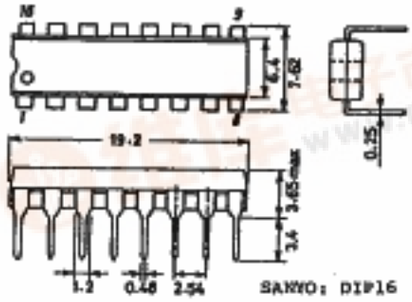

Continued from preceding page.

			min	typ	max	unit
Comparator Output H Level Voltage	Vcom(H)	Pin 7=2.4V	6.5	7.7		V
Comparator Output L Level Voltage	Vcom(L)	Pin 7=1.5V		0.2	0.35	V
Predriver Input ON-State Voltage	$V_{IN(ON)}$	I_{IN}=10uA		1.5		V
Predriver Output Saturation Voltage	$V_{OUT(sat)}$	I_{OUT}=-20mA, V_{IN}=0V		0.9	2.0	V
Predriver Output Leakage Current	$I_{OUT(OL)}$	V_{OUT}=17V, V_{IN}=2.2V			2.0	uA
Predriver DC Current Gain	h_{FE}	I_{OUT}=-20mA		15000		-
STOP Pin Input Threshold Voltage	$V_{STOP(th)}$			1.5		V

Equivalent Circuit Block Diagram

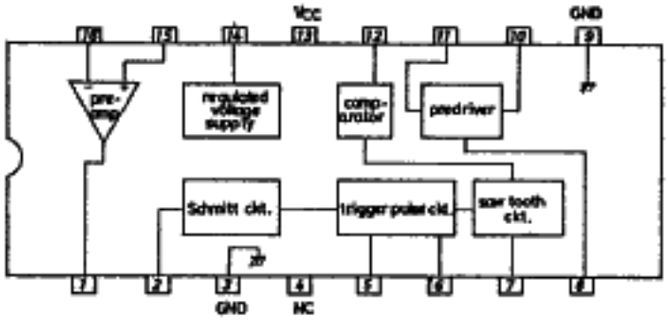

Sample Application Circuit I

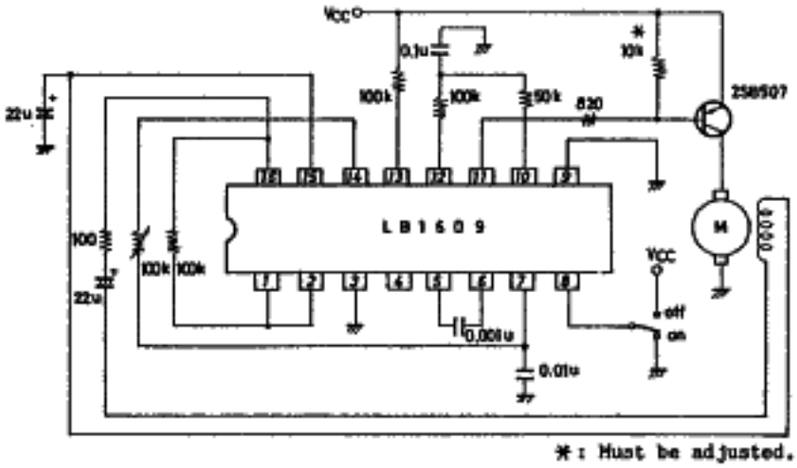

*: Must be adjusted.

 T-52-13-25

Sample Application Circuit II (Forward/reverse control)

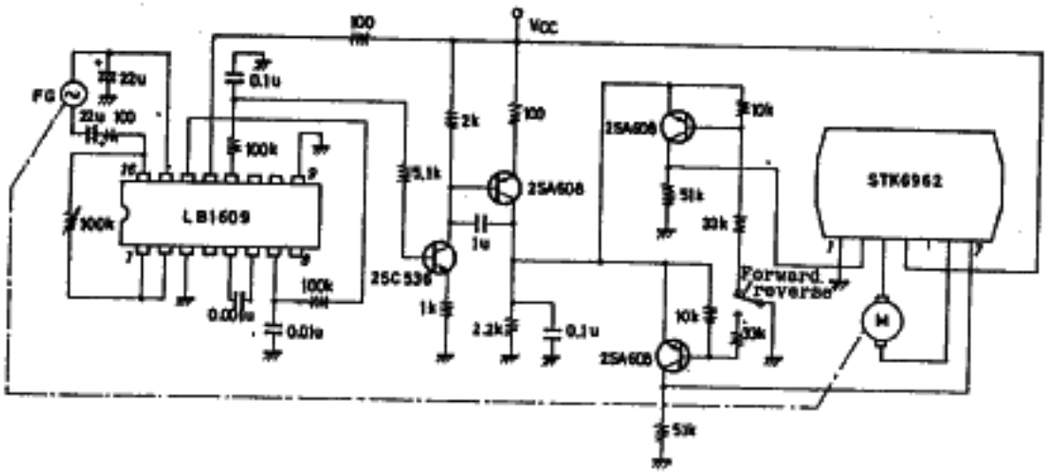

It is necessary for forward←→reverse switchover to take 15usec. or more.
The circuit constants may be changed depending on a motor to be used.

Application Characteristics