查询LB1730供应商 捷多邦，专业PCB打样工厂，24小时加急出货

Monolithic Digital IC

SANYO

No.3298

LB1730

High-Voltage, High-Current, Darlington Driver

Functions and Features

- Four independent high-voltage (85V), high-current (1.5A) Darlington driver
- On-chip spark killer diode
- Capable of being operated direct by 5V TTL
- NPN input high-active type

Absolute Maximum Ratings at Ta = 25°C

				unit
Maximum Supply Voltage	V_{CC} max		85	V
Applied Output Voltage	V_{OUT}		85	V
Applied Input Voltage	V_{IN}		15	V
Output Current	I_{OUT}		1.5	A
Spark Killer Diode Forward Current	I_{FS}		1.5	A
Allowable Power Dissipation	Pd max	(With recommended circuit board pattern : 2.6W)	1.9	W
Operating Temperature	Topr		−20 to +75	°C
Storage Temperature	Tstg		−55 to +150	°C

Allowable Operating Conditions at Ta = 25°C

				unit
Applied Output Voltage	V_{OUT}		85	V
Input ON-Level Voltage	V_{IN} on	I_{OUT} = 1.0A	2.0 to 15	V
Input OFF-Level Voltage	V_{IN} off	$I_{OUT} \leq 30\mu A$	−0.3 to +0.3	V

Electrical Characteristics at Ta = 25°C

			min	typ	max	unit
Output Saturation Voltage	V_o sat1	V_{IN} = 5.0V, I_{OUT} = 0.5A			1.2	V
	V_o sat2	V_{IN} = 5.0V, I_{OUT} = 1.0A			1.5	V
	V_o sat3	V_{IN} = 5.0V, I_{OUT} = 1.5A			2.0	V
Output Sustain Voltage	V_o sus	I_{OUT} = 100mA	85			V
Input Current	I_{IN}	V_{IN} = 5.0V		11	15	mA
Spark Killer Diode Forward Voltage	V_{FS}	I_{FS} = 1.5A			3.0	V
Spark Killer Diode Reverse Current	I_{RS}	V_{CC} = 85V, V_{OUT} = 0V			30	μA

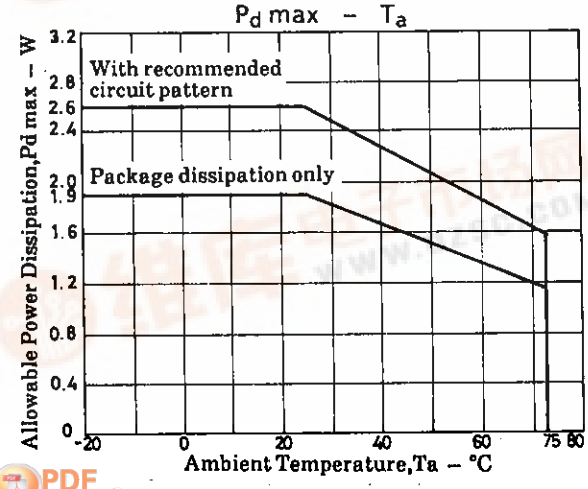

Package Dimensions 3054A-D16FIC
(unit : mm)

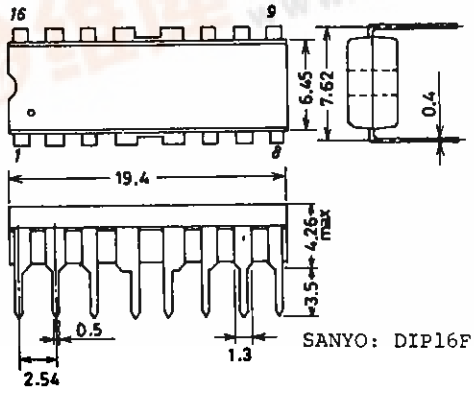

找PDF 维库一下 pdf.dzsc.com

Pin Assingnment

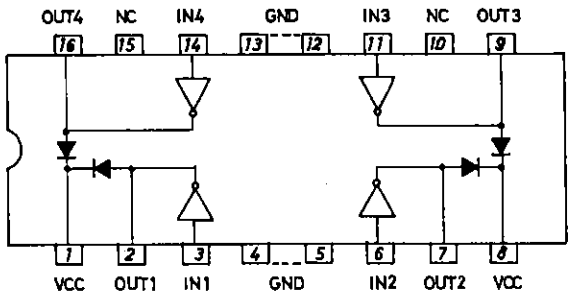

Note) · V_{CC} (pins 1 and 8) are shorted internally
· Do not use NC pin.

Equivalent Circuit

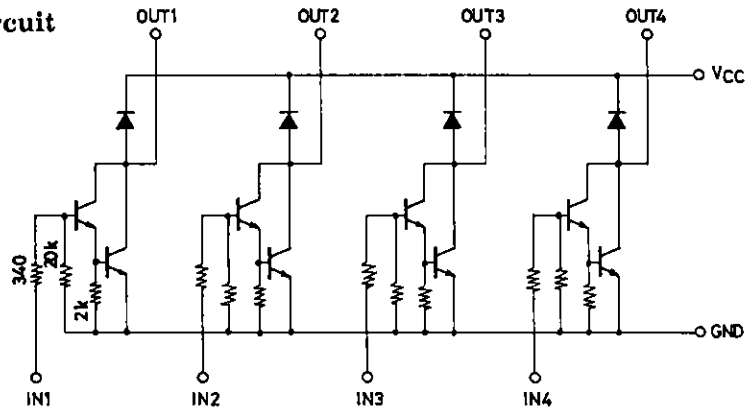

Sample Printed Pattern Circuit

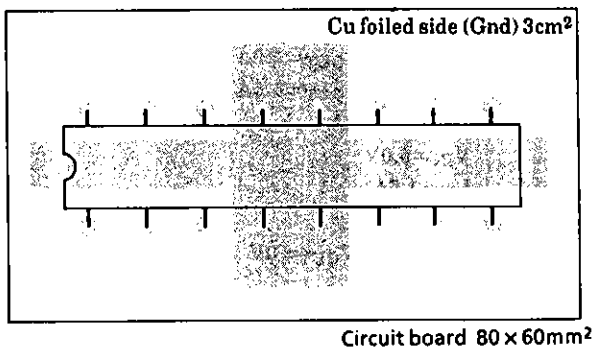

■ No products described or contained herein are intended for use in surgical implants, life-support systems, aerospace equipment, nuclear power control systems, vehicles, disaster/crime-prevention equipment and the like, the failure of which may directly or indirectly cause injury, death or property loss.

■ Anyone purchasing any products described or contained herein for an above-mentioned use shall:
① Accept full responsibility and indemnify and defend SANYO ELECTRIC CO., LTD., its affiliates, subsidiaries and distributors and all their officers and employees, jointly and severally, against any and all claims and litigation and all damages, cost and expenses associated with such use:
② Not impose any responsibility for any fault or negligence which may be cited in any such claim or litigation on SANYO ELECTRIC CO., LTD., its affiliates, subsidiaries and distributors or any of their officers and employees jointly or severally.

■ Information (including circuit diagrams and circuit parameters) herein is for example only; it is not guaranteed for volume production. SANYO believes information herein is accurate and reliable, but no guarantees are made or implied regarding its use or any infringements of intellectual property rights or other rights of third parties.