查询LB1830M供应商 捷多邦，专业PCB打样工厂，24小时加急出货

Ordering number: EN3518A

Monolithic Digital IC

LB1830M

Low-Saturation Bidirectional Motor Driver for Low-Voltage Applications

Overview

The LB1830M is a low-saturation bidirectional motor driver IC with brake function for use in low-voltage applications. As both of forward and reverse outputs are regulated, it is especially suited for use in portable equipment such as VCR, camera.

Features

- Wide operating voltage range: 3.0 to 9.0 V
- Low saturation voltage: 0.2 V at I_O = 40 mA (typ)
- Low current drain at standby mode (0.1 µA or less)
- Brake function
- Regulated voltage value (forward/reverse) setting available by one variable resistor
- Regulated output/saturation output switching available
- Built-in spark killer diodes
- MFP-10S package

Package Dimensions

unit: mm

3086A-MFP10S

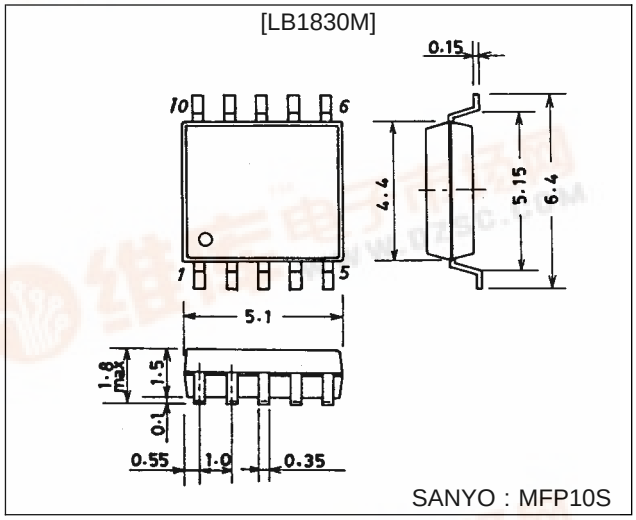

Specifications

Absolute Maximum Ratings at Ta = 25 °C

Parameter	Symbol	Conditions	Ratings	Unit
Maximum supply voltage	V_{CC} max		10.5	V
Output current	Im max		200	mA
Input supply voltage	V_{IN}		–0.3 to +10	V
Allowable power dissipation	Pd max	Independent IC	0.4	W
		With specified board (30 × 30 × 1.5 mm^3)	0.55	W
Operating temperature	Topr		–20 to +80	°C
Storage temperature	Tstg		–40 to +125	°C

Allowable Operating Ranges at Ta = 25 °C

Parameter	Symbol	Conditions	Ratings	Unit
Supply voltage	V_{CC}		3.0 to 9.0	V
Input high level voltage	V_{IH}		2.0 to 9.0	V
Input low level voltage	V_{IL}		–0.3 to +0.3	V
Control voltage	V_C		1.0 to 6.0	V

找PDF 维库一下 pdf.dzsc.com

Electrical Characteristics at Ta = 25 °C, V_{CC} = 6 V

Parameter	Symbol	Conditions	min	typ	max	Unit
Current drain	$I_{CC}0$	IN1 = IN2 = Vm = 0 V, V_C = Vref at standby mode		0.1	10	µA
	$I_{CC}1$	Forward/reverse, control, load OPEN		2	3	mA
	$I_{CC}2$	Forward/reverse, saturation, load OPEN		3	5	mA
	$I_{CC}3$	Braking, load OPEN		5	8	mA
Output saturation voltage	V_{sat1}	I_O = 40 mA (upper + lower)		0.2	0.3	V
	V_{sat2}	I_O = 80 mA (upper + lower)		0.4	0.6	V
Reference voltage	V_{ref}	I_{Vref} = 1 mA	1.85	2.0	2.15	V
Voltage characteristics of output voltage	$\frac{\Delta V_O}{\Delta V_{CC}}$	V_O = 5 V, V_{CC} = 5.5 to 9 V, I_O = 40 mA			80	mV
Current characteristics of output voltage	$\frac{\Delta V_O}{\Delta I_{CC}}$	V_O = 5 V, V_{CC} = 6 V, I_O = 10 to 80 mA			50	mV
Input current	I_{IN}	V_{IN} = 5 V		90	150	µA
Output voltage	V_O	V_C = 2 V	2.3 × V_C		2.5 × V_C	V

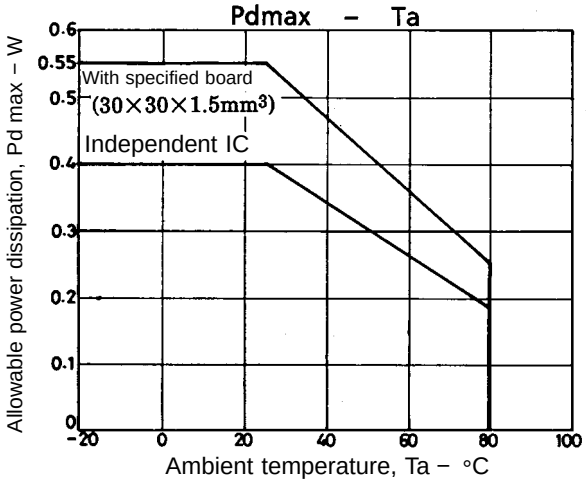

Equivalent Circuit Block Diagram

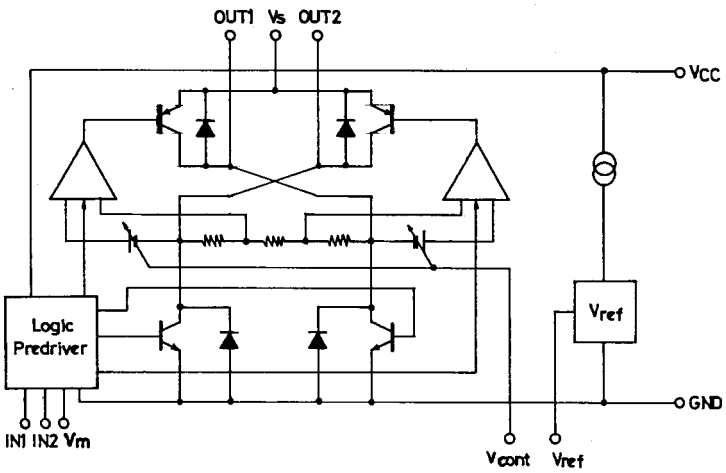

Pin Assignment

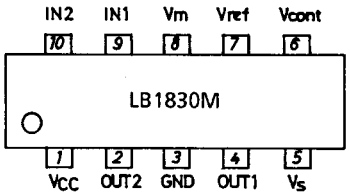

Top view

Sample Application Circuit

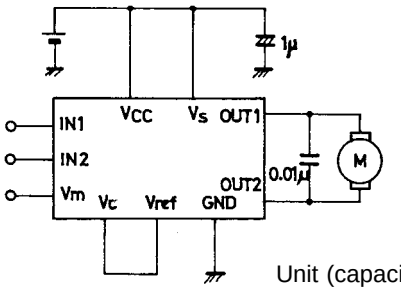

Unit (capacitance: F)

Truth Table

Input			Output		Mode
IN1	IN2	Vm	OUT1	OUT2	
L	L	L	off	off	Standby
H	L	L	H	L	Forward (Regulated)
H	L	H	H	L	Forward (Saturation)
L	H	L	L	H	Reverse (Regulated)
L	H	H	L	H	Reverse (Saturation)
H	H	*	L	L	Brake

*: When in saturation mode, $V_C = V_S$ available

■ No products described or contained herein are intended for use in surgical implants, life-support systems, aerospace equipment, nuclear power control systems, vehicles, disaster/crime-prevention equipment and the like, the failure of which may directly or indirectly cause injury, death or property loss.

■ Anyone purchasing any products described or contained herein for an above-mentioned use shall:
① Accept full responsibility and indemnify and defend SANYO ELECTRIC CO., LTD., its affiliates, subsidiaries and distributors and all their officers and employees, jointly and severally, against any and all claims and litigation and all damages, cost and expenses associated with such use:
② Not impose any responsibility for any fault or negligence which may be cited in any such claim or litigation on SANYO ELECTRIC CO., LTD., its affiliates, subsidiaries and distributors or any of their officers and employees jointly or severally.

■ Information (including circuit diagrams and circuit parameters) herein is for example only; it is not guaranteed for volume production. SANYO believes information herein is accurate and reliable, but no guarantees are made or implied regarding its use or any infringements of intellectual property rights or other rights of third parties.

This catalog provides information as of January, 1997. Specifications and information herein are subject to change without notice.