Ordering number: EN2889
查询LC7365供应商 捷多邦，专业PCB打样工厂，24小时加急出货

CMOS LSI

SANYO No.2889

LC7365N, 7366N

DTMF Tone Generator for Pushbutton Telephone

The LC7365N, 7366N are DTMF tone generator LSIs for use in pushbutton telephones.
The LC7365N contains a keyboard scan circuit and the LC7366N can direct accept the output from a microcomputer.

Features

- Low voltage CMOS process for direct operation from telephone line
- The LC7365N can interface directly to a single contact or standard 2-of-7, 2-of-8 key pad.
- The LC7366N has an input configuration that facilitates interface to a microcomputer. (Positive logic input)
- Uses TV crystal standard (fosc = 3.58MHz) to derive all frequencies.
- On-chip feedback resistor and capacitors to form the OSC circuit
- Wide operating voltage range : 2.5 to 10.0V
- On-chip generation of a reference voltage to assure amplitude stability of the dual tones over the operating voltage and temperature range
- Low output tone distortion (7% max) over the whole supply voltage range (V_{DD} = 2.5 to 10.0V)
- On-chip MUTE output and XMIT output
- Current dissipation at operating mode : I_{DD} = 3mA max/V_{DD} = 2.5V, 16mA max/V_{DD} = 10V
- Current dissipation at standby mode : I_{DD} = 0.3μA typ/V_{DD} = 2.5V, 1μA typ/V_{DD} = 10V

Pin Assignment and Pin Connection

Pin No.	Pin Name	Input/Output		Pin No.	Pin Name	Input/Output	
		LC7365N	LC7366N			LC7365N	LC7366N
1	V_{DD}	–	–	9	C4	I/O	I
2	XMIT	O	O	10	MUTE	O	O
3	C1	I/O	I	11	R4	I/O	I
4	C2	I/O	I	12	R3	I/O	I
5	C3	I/O	I	13	R2	I/O	I
6	V_{SS}	–	–	14	R1	I/O	I
7	OSCI	I	I	15	CD	I	I
8	OSCO	O	O	16	TONE OUT	O	O

Package Dimensions 3006B-D16IC
(unit: mm)

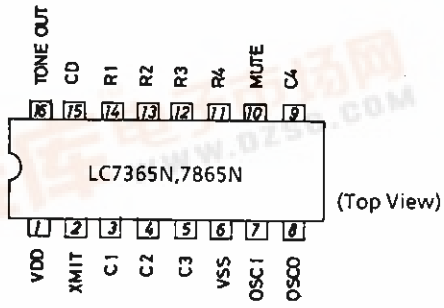

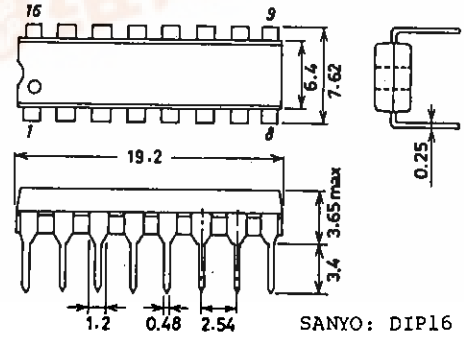

SANYO: DIP16

找PDF pdf.dzsc.com

Equivalent Circuit Block Diagram

LC7365N

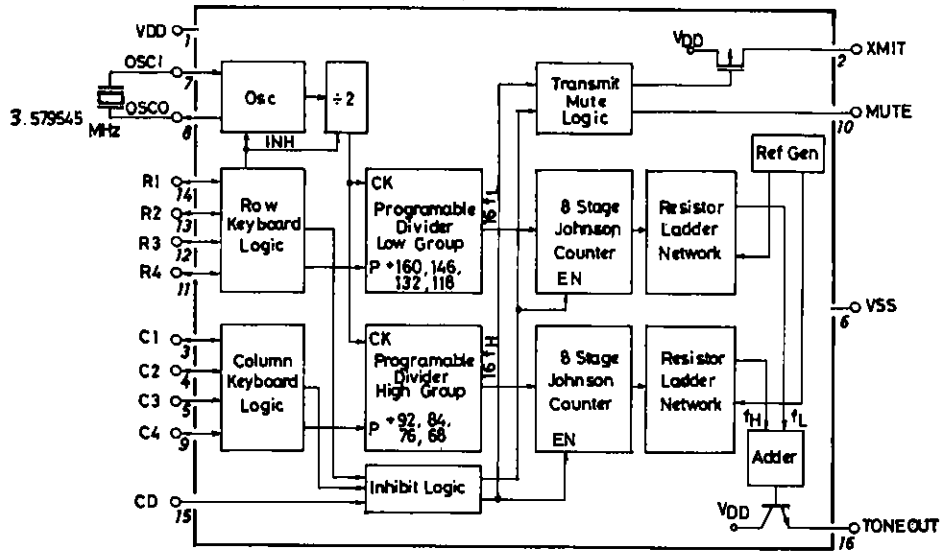

LC7366N

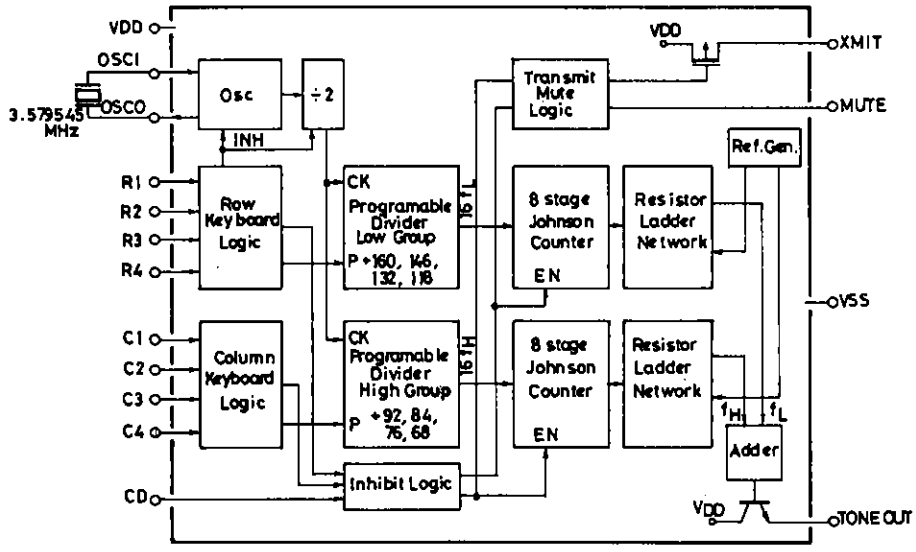

Pin Description

↓ Applicable to both Type Nos. when no Type No. is indicated.

Pin Name	Pin No.	Input/Output Configuration	Function
V_{DD}	1		Power supply pin
V_{SS}	6		V_{DD}=2.5 to 10.0V
OSCO	8	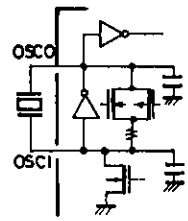	Reference frequency generation pin Uses a crystal resonator of 3.579545MHz. With the feedback resistor and capacitors contained to form the OSC circuit, a crystal resonator is simply connected across the pins.
OSCI	7		
LC7365N R1 to R4 C1 to C4	14 to 11 3 to 5 9	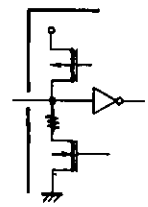	Row and column input pin High-active input Contains a P-channel transistor for keyboard scan and an N-channel transistor for pull-down.
LC7366N R1 to R4 C1 to C4	14 to 11 3 to 5 9	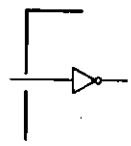	Row and column input pin High-active input
MUTE	10	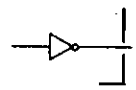	'L' level with no key input 'H' level with key input CMOS complementary output
XMIT	2	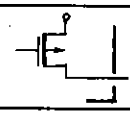	'H' level with no key input High impedance with key input P-channel open drain output
CD	15	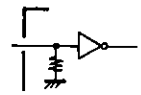	Chip disable pin When set to 'H' level, the row input/column input are brought to high impedance state, OSC stops, tone output becomes 'V_{SS}' level, MUTE output becomes 'L' level, and XMIT output becomes 'H' level.
TONE	16	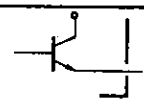	DTMF signal output pin npn transistor-used emitter-follower output

Absolute Maximum Ratings at Ta=25°C

			unit
Maximum Supply Voltage	V_{DD} max	−0.3 to +10.5	V
Maximum Input Voltage	V_I max	$V_{SS}-0.3 \leqq V_{IN} \leqq V_{DD}+0.3$	V
XMIT Pin Output Current	I_{OH}	up to 60	mA
MUTE Pin Output Current	I_{OL}	up to 10	mA
	I_{OH}	up to 3	mA
Tone Pin Maximum Load Resistance	R_T	240 min.	Ω
Allowable Power Dissipation	Pd max	up to 450	mW
Operating Temperature	Topr	−30 to +70	°C
Storage Temperature	Tstg	−40 to +125	°C

Allowable Operating Conditions at Ta = −30 to +70°C

				unit
Supply Voltage	V_{DD}	Tone output mode	2.5 to 10.0	V
		Non-tone output mode	1.6 to 10.0	V
Input 'H'-Level Voltage	V_{IH}	R1 to R4,CD,C1 to C4	$0.7V_{DD}$ to V_{DD}	V
Input 'L'-Level Voltage	V_{IL}	R1 to R4,CD,C1 to C4	V_{SS} to $0.3V_{SS}$	V
Key Contact Resistance			1	kΩ
Crystal Resonator Spec.	f		3.579545MHz ± 0.02%	
	Rs		up to 100	Ω

Electrical Characteristics at Ta = 25°C

			; Applicable pin	V_{CC}	min	typ	max	unit
Supply Voltage	V_{DD}	Tone output mode			2.5		10	V
		Non-tone output mode			1.6		10	V
Current Dissipation	I_{DD}	Non-tone output mode; V_{DD}		2.5		0.3	30	μA
		Non-tone output mode; V_{DD}		10		1.0	100	μA
		Tone output mode; V_{DD}		2.5		1.5	3	mA
		Tone output mode; V_{DD}		10		8	16	mA
Single Tone Output Voltage	V_{OR}	Row tone,R_L = 390Ω; TONE OUT		2.5	160	200	250	mVrms
		Row tone,R_L = 390Ω; TONE OUT		5	170	220	280	mVrms
		Row tone,R_L = 240Ω; TONE OUT		10	170	220	280	mVrms
Ratio of Column to Row Tone	dB_{CR}			2.5 to 10	1	2	3	dB
Total Harmonic Distortion	THD	f_{out} = 0.5 to 3.5kHz,R_L = 10kΩ		2.5 to 10			7	%
XMIT Output Voltage	V_{OH1}	I_{OH} = 5mA; XMIT		2.5	1.5	1.8		V
		I_{OH} = 50mA; XMIT		10	8.5	8.8		V
XMIT Leakage Current	I_{OF}		; XMIT	10			100	μA
MUTE Output Voltage	V_{OL}	Output open; MUTE		2.5		0	0.5	V
		Output open; MUTE		10		0	0.5	V
	V_{OH2}	Output open; MUTE		2.5	2.25	2.5		V
		Output open; MUTE		10	9.5	10.0		V
MUTE Output Current	I_{OL1}	V_{OL} = 0.5V; MUTE		2.5	0.4			mA
		V_{OL} = 0.5V; MUTE		10	2.0			mA
	I_{OH2}	V_{OH} = 2.0V; MUTE		2.5	0.17			mA
		V_{OH} = 9.5V; MUTE		10	0.57			mA
OSC Output Current	I_{OL2}	V_{OL} = 0.5V; OSCO		2.5	0.18			mA
		V_{OL} = 0.5V; OSCO		10	0.8			mA
	I_{OH3}	V_{OH} = 2.0V; OSCO		2.5	0.13			mA
		V_{OH} = 9.5V; OSCO		10	0.42			mA
OSC Start Voltage	t_{st}			2.5			5	ms
				10			4	ms
Input/Output Capacitance	$c_{I/O}$		; OSCI, OSCO	2.5			16	pF
			; OSCI, OSCO	10			14	pF
Column/Row Input Current	I_{IHOF}	V_{IH} = 2.5V; [R1 to R4,		2.5			1	μA
		V_{IH} = 10V; C1 to C4,		10			2	μA
	I_{ILOF}	V_{OH} = 2V; LC7366N alone]		2.5			1	μA
		V_{OH} = 9.5V;		10			2	μA
Key Pin Current	I_{IH1}	V_{IH} = 2.5V; [R1 to R4,		2.5	4			μA
		V_{IH} = 10V; C1 to C4,		10	9.2			μA
	I_{OH4}	V_{OH} = 2V; LC7365N alone]		2.5	70			μA
		V_{OH} = 9.5V;		10	280			μA
CD Pin Input Current	I_{IH2}	V_{IH} = 2.5V; CD		2.5	2.5			μA
		V_{IH} = 10V; CD		10	55			μA
OSC Frequency	f_{osc}		; OSCI,OSCO	2.5 to 10	3.579545MHz ± 0.26%			

Comparison betweeen Tone Output Frequency and DTMF Signal Spec.

Input Pin	Output Frequency [Hz]		Error [%]
	Spec.	LC7365N,7366N Output	
R1	697	699.1	+0.30
R2	770	766.2	−0.49
R3	852	847.4	−0.54
R4	941	948.0	+0.74
C1	1209	1215.9	+0.57
C2	1336	1331.7	−0.32
C3	1477	1471.9	−0.35
C4	1633	1645.0	+0.73

(Note) OSC drift : 0

Relation between Input and DTMF Signal

Desired DTMF Signal	Input							
	R1	R2	R3	R4	C1	C2	C3	C4
1	1	0	0	0	1	0	0	0
2	1	0	0	0	0	1	0	0
3	1	0	0	0	0	0	1	0
4	0	1	0	0	1	0	0	0
5	0	1	0	0	0	1	0	0
6	0	1	0	0	0	0	1	0
7	0	0	1	0	1	0	0	0
8	0	0	1	0	0	1	0	0
9	0	0	1	0	0	0	1	0
0	0	0	0	1	0	1	0	0
*	0	0	0	1	1	0	0	0
#	0	0	0	1	0	0	1	0
A	1	0	0	0	0	0	0	1
B	0	1	0	0	0	0	0	1
C	0	0	1	0	0	0	0	1
D	0	0	0	1	0	0	0	1

How to Output a Single Tone

Select a row (or column) input according to your desired tone output frequency (set to '1' level) and two or more column (or row) inputs in that row (or column).

When two or more row (or column) inputs are selected, output of that row (or column) tone is inhibited.

It should be noted that when all of four inputs in any row are set to '1' level a signal 16 times the corresponding column tone is output at the MUTE pin.

Sample Connections to Key Board, Microcomputer

(1) Connection of LC7365N to standard 2-of-7 key board

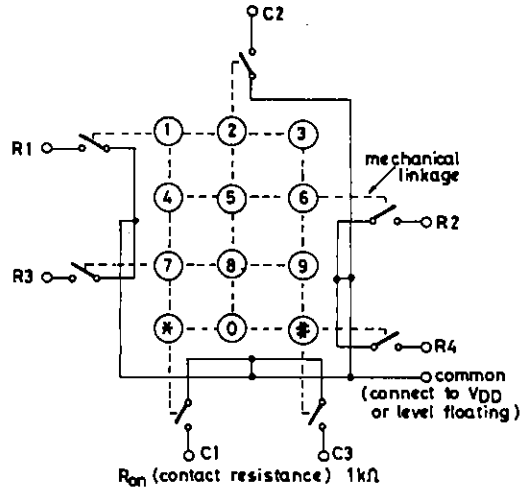

(2) Connection of LC7365N to single contact key

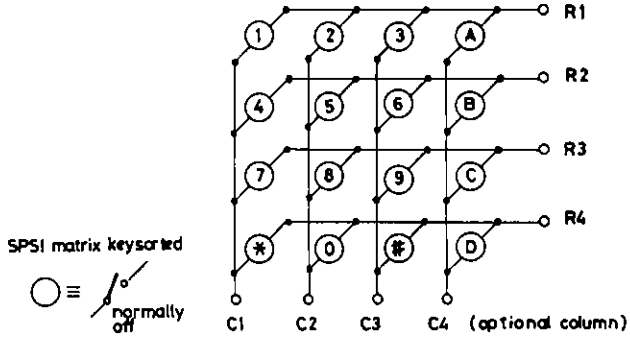

(3) Connection of LC7366N to microcomputer

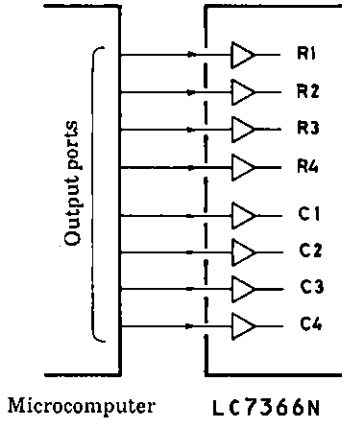

LC7365N Timing Chart

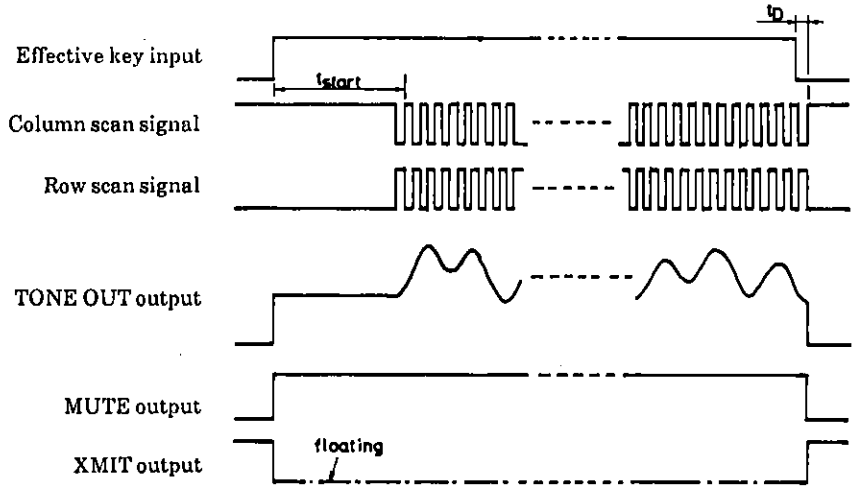

Scan period × 1/4 < t_D < Scan period × 3/4

LC7366N Timing Chart

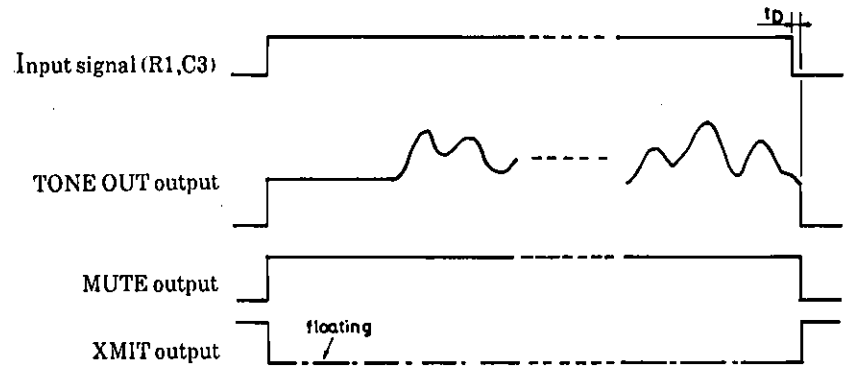

Row tone period × 1/32 < t_D < Row tone period × 3/32

LC7366N t_{start} Timing Chart

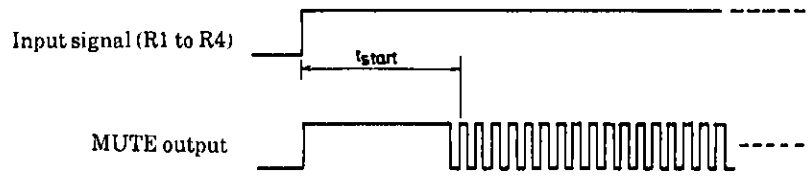

Sample Application Circuit of LC7365N

Unit (resistance: Ω, capacitance: F)

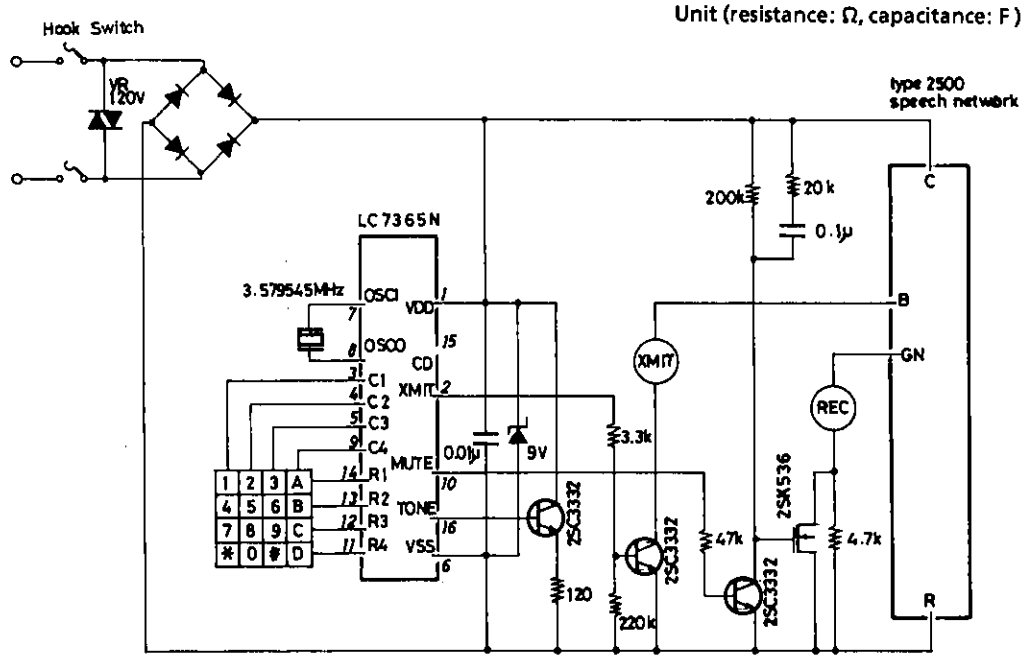

■ No products described or contained herein are intended for use in surgical implants, life-support systems, aerospace equipment, nuclear power control systems, vehicles, disaster/crime-prevention equipment and the like, the failure of which may directly or indirectly cause injury, death or property loss.

■ Anyone purchasing any products described or contained herein for an above-mentioned use shall:
① Accept full responsibility and indemnify and defend SANYO ELECTRIC CO., LTD., its affiliates, subsidiaries and distributors and all their officers and employees, jointly and severally, against any and all claims and litigation and all damages, cost and expenses associated with such use:
② Not impose any responsibility for any fault or negligence which may be cited in any such claim or litigation on SANYO ELECTRIC CO., LTD., its affiliates, subsidiaries and distributors or any of their officers and employees jointly or severally.

■ Information (including circuit diagrams and circuit parameters) herein is for example only; it is not guaranteed for volume production. SANYO believes information herein is accurate and reliable, but no guarantees are made or implied regarding its use or any infringements of intellectual property rights or other rights of third parties.