CMOS LSI

SANYO

No. ※3588

LC7464M

Infrared Remote Control Transmitter IC

Preliminary

OVERVIEW

The LC7464M is a 64-key infrared remote control transmitter IC that incorporates all key-scanning, oscillator and timing functions on-chip, resulting in a very low external component count.

The LC7464M generates 71 function codes using the 64 function keys. The output data format comprises the mask-programmed custom code, the parity field, the mask-programmed system code, the product code, the function code and the data check code.

The LC7464M operates from a 2.0 to 3.6 V supply and is available in 24-pin MFPs.

FEATURES

- Low external component count
- 64 function keys
- 71 function codes
- Mask-programmable custom and system codes
- 64 product codes
- Output conforms to Japan's Association for Electric Home Appliances recommended standards for infrared remote controls.
- On-chip input pull-down resistors
- 2.0 to 3.6 V supply
- 24-pin MFP

PINOUT

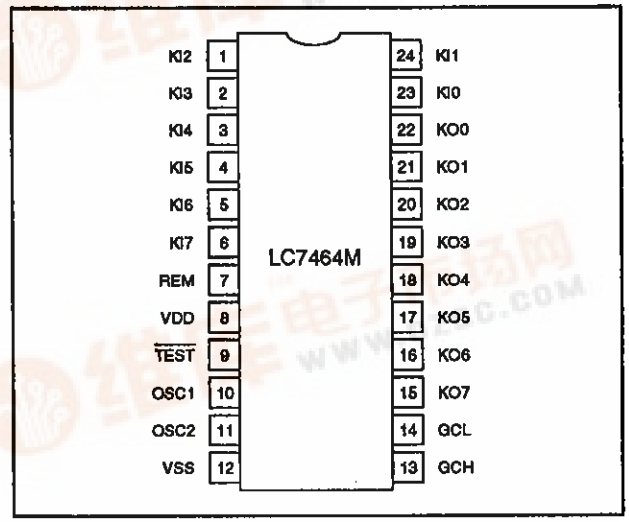

PACKAGE DIMENSIONS

Unit: mm

3045B-MFP24

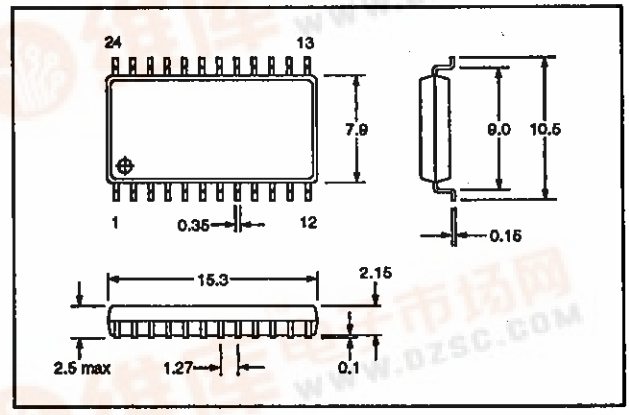

BLOCK DIAGRAM

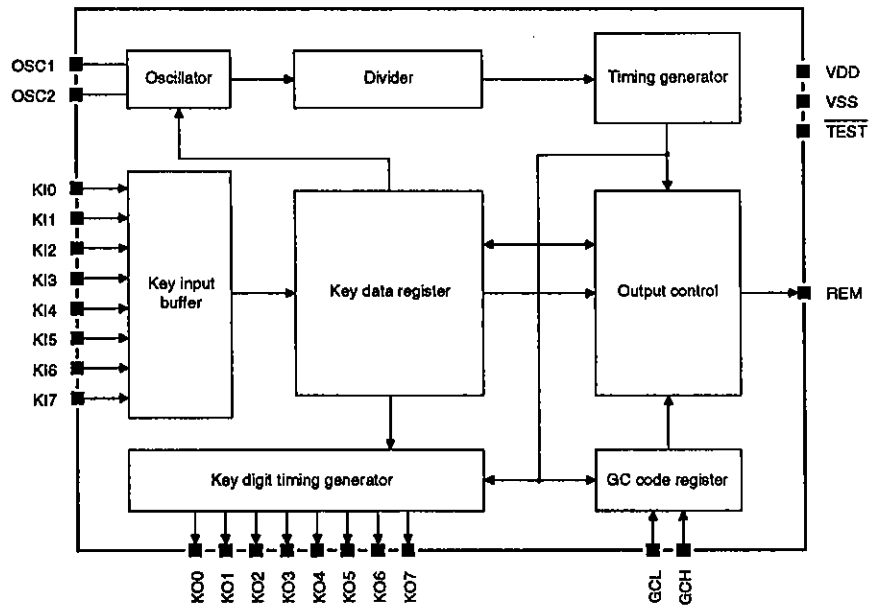

PIN DESCRIPTION

Number	Name	Equivalent circuit	Description
1 to 6, 23, 24	KI0 to KI7		Keyswitch scanning inputs
7	REM		LED driver output
8	VDD		Supply voltage
9	$\overline{\text{TEST}}$		Test input. $\overline{\text{TEST}}$ should be tied HIGH or left open for normal operation.
10	OSC1		Ceramic oscillator input connection
11	OSC2		Ceramic oscillator output connection
12	VSS		Ground
13, 14	GCL, GCH		Product code select inputs
15 to 22	KO0 to KO7		Keyswitch scanning outputs

SPECIFICATIONS

Absolute Maximum Ratings

Parameter	Symbol	Rating	Unit
Supply voltage range	V_{DD}	V_{SS} − 0.3 to 5.5	V
Input voltage range	V_I	V_{SS} − 0.3 to V_{DD} + 0.3	V
Output voltage range	V_O	V_{SS} − 0.3 to V_{DD} + 0.3	V
Output current	I_O	−35	mA
Power dissipation	P_D	150	mW
Operating temperature range	Topr	−40 to 85	°C
Storage temperature range	T_{stg}	−50 to 125	°C

Recommended Operating Conditions

T_a = 25 °C

Parameter	Symbol	Rating	Unit
Supply voltage	V_{DD}	3	V
Supply voltage range	V_{DD}	2.0 to 3.6	V

Electrical Characteristics

V_{DD} = 2.0 to 3.6 V, T_a = −40 to 85 °C unless otherwise noted

Parameter	Symbol	Condition	Rating			Unit
			min	typ	max	
Operating supply current	I_{DD}	Key pressed, no load	–	–	1	mA
Standby supply current	I_{DS}	No key pressed, oscillator stopped	–	–	1	µA
KI0 to KI7, GCL and GCH LOW-level input voltage	V_{IL}		V_{SS}	–	$0.3V_{DD}$	V
KI0 to KI7, GCL and GCH HIGH-level input voltage	V_{IH}		$0.7V_{DD}$	–	V_{DD}	V
KO0 to KO7 and REM LOW-level output voltage	V_{OL}	I_{OL} = 0.1 mA	–	–	0.3	V
KO0 to KO7 HIGH-level output voltage	V_{OH}	I_{OH} = −0.1 mA	V_{DD} − 0.3	–	–	V
GCL and GCH LOW-level input current	I_{IL}	$V_I = V_{SS}$	−1	–	–	µA
GCL and GCH HIGH-level input current	I_{IH}	$V_I = V_{DD}$	–	–	1	µA
REM HIGH-level output current	I_{OH}	V_{DD} = 2 V, $V_{OH} = V_{DD}$ − 1 V	–	−2.5	–	mA
		V_{DD} = 3 V, $V_{OH} = V_{DD}$ − 1 V	–	−11	–	
KI0 to KI7 input floating voltage	V_{IF}		–	–	$0.1V_{DD}$	V
KI0 to KI7 input pull-down resistance	R_{IN}		75	100	125	kΩ
Oscillator frequency	f_{osc}		433	455	477	kHz

FUNCTIONAL DESCRIPTION

Key Inputs

An eight-by-eight matrix is formed with the keyswitch scanning outputs KO0 to KO7 and the keyswitch scanning inputs KI0 to KI7 as shown in the following figure.

	KI0	KI1	KI2	KI3	KI4	KI5	KI6	KI7
KO0	1	9	17	25	33	41	49	57
KO1	2	10	18	26	34	42	50	58
KO2	3	11	19	27	35	43	51	59
KO3	4	12	20	28	36	44	52	60
KO4	5	13	21	29	37	45	53	61
KO5	6	14	22	30	38	46	54	62
KO6	7	15	23	31	39	47	55	63
KO7	8	16	24	32	40	48	56	64

When a key is held down, either the normal or abbreviated continuation code is output continuously, depending on the mask option selected.

Normally, only one key can be pressed at a time. If more than one key is pressed, all keys are ignored and no output is generated. However, when the appropriate mask option is selected, up to three extra codes can be generated by holding down key 8 and either key 16, 24, 32, 40, 48, 56 or 64 as shown in table 1.

Table 1. Function code generation

Key combination	Function code							
	FC0	FC1	FC2	FC3	FC4	FC5	FC6	FC7
8, 16	1	1	1	0	1	0	0	1
8, 24	1	1	1	0	0	1	0	1
8, 32	1	1	1	0	1	1	0	1
8, 40	1	1	1	0	0	0	1	1
8, 48	1	1	1	0	1	0	1	1
8, 56	1	1	1	0	0	1	1	1
8, 64	1	1	1	0	1	1	1	1

Output Data Configuration

The 48-bit output data configuration is shown in the following figure. Note that the data is sent least-significant bit first.

C0 to C15	P0 to P3	SC0 to SC3	GC0 to GC7	FC0 to FC7	DC0 to DC7
16-bit custom code	4-bit parity	4-bit system code	8-bit product code	8-bit function code	8-bit data check code

Custom code

The 16-bit mask-programmable custom code (C0 to C15) is a unique code registered with the Association for Electric Home Appliances.

Parity bits

The four parity bits (P0 to P3) are used for error detection. Their value is given by the following equation.

$$Pn = Cn \oplus C(n + 4) \oplus C(n + 8) \oplus (n + 12)$$

where $n = 0$ to 3.

System code

The four-bit system code (SC0 to SC3) is mask-programmed into the LC7464M during fabrication.

Product code

The eight-bit product code (GC0 to GC7) consists of two mask-programmable bits and six bits that are set by connecting each of GCL and GCH to one of KO0 to KO7. The block diagram of the product code generator is shown in the following figure. GC1 and GC3 are the mask-programmable bits, shown set to zero.

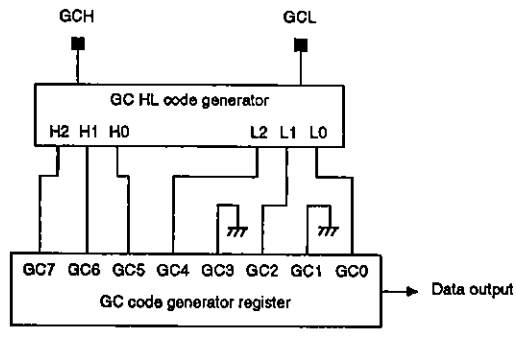

Tables 2 and 3 show the relationships between GCL and L0 to L2, and between GCH and H0 to H2, respectively.

Table 2. GCL product codes

PIn	Code generated		
	L0	L1	L2
KO0	0	0	0
KO1	1	0	0
KO2	0	1	0
KO3	1	1	0
KO4	0	0	1
KO5	1	0	1
KO6	0	1	1
KO7	1	1	1

Table 3. GCH product codes

PIn	Code generated		
	H0	H1	H2
KO0	0	0	0
KO1	1	0	0
KO2	0	1	0
KO3	1	1	0
KO4	0	0	1
KO5	1	0	1
KO6	0	1	1
KO7	1	1	1

Function code

The eight-bit function code (FC0 to FC7) is determined by the number of the key pressed as shown in the following figure. Note that when the appropriate mask option is selected, function codes 97H, A7H, B7H, C7H, D7H, E7H and F7H can be generated by holding down key 8 and one of keys 16, 24, 32, 40, 48, 56 and 64.

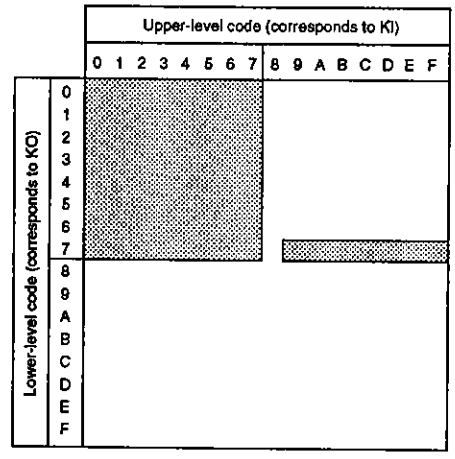

Data check code

The eight-bit data check code (DC0 to DC7) is generated by adding the carry bits from the system code to the product and function code bits. This code is used for error detection. The data check code is calculated using the following equation.

DC = SC + GC0 to GC3 + GC4 to GC7 + FC0 to FC3 + FC4 to FC7

For example, when

SC = 0H, GC = 0B1H, FC = 35H

DC = 0H + 1H + 0BH + 5H + 3H = 14H

Data Transmission Waveforms

Abbreviated transmission mode

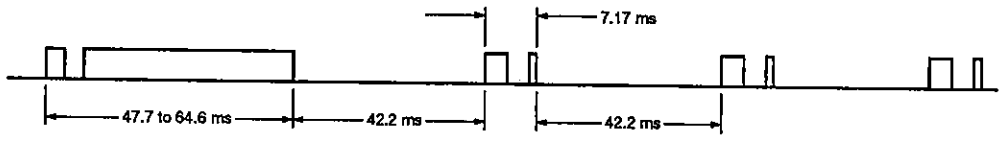

Abbreviated mode detail

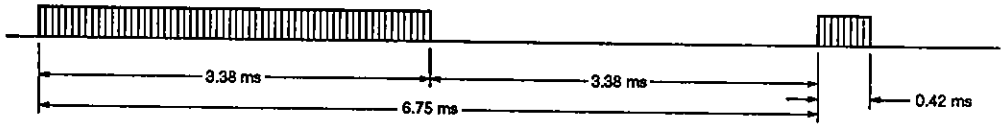

Normal transmission mode

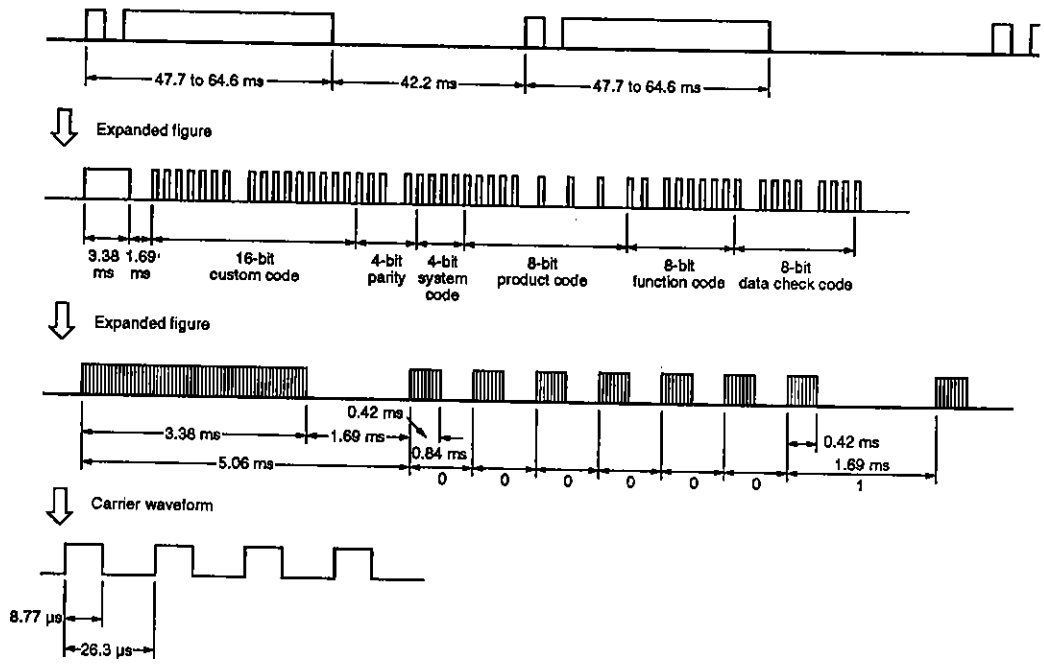

Oscillator

The LC7464M contains a self-biasing CMOS inverter that is used as an oscillator when connected to a ceramic resonator as shown in the following figure. To reduce power, the oscillator operates only when a key is pressed.

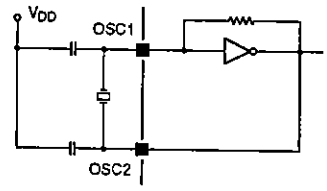

TYPICAL APPLICATION