查询LHI944供应商 捷多邦，专业PCB打样工厂，24小时加急出货



Pyroelectric Infrared Detectors

# Dual Element Detectors LHi 944

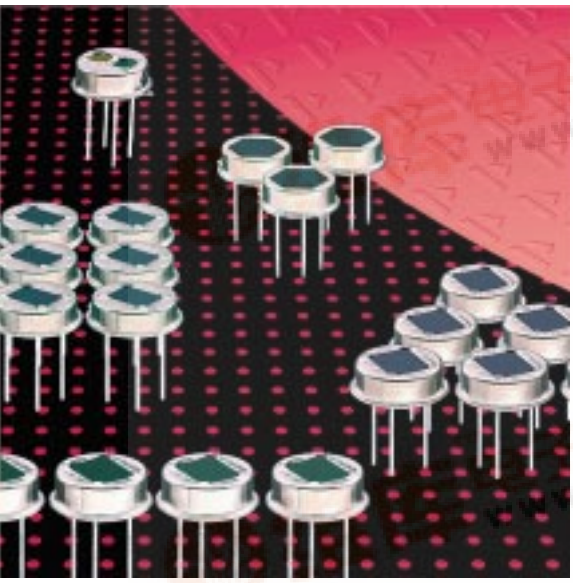

## TO-39 housing

## Wide field of view

## Designed for motion control

## RF Protection

The **LHi 944** pyroelectric infrared-detector series represents a special dual element design recommended for motion control with extended Field of view. They include a dual element pyroelectric ceramic with FET in source follower connection, and RF protection by additional capacitor.

The **LHi 944** is available as **TO-39** housing with standard infrared filter. It offers high responsivity with excellent common mode performance (match) and low noise at steady state and temperature changes.

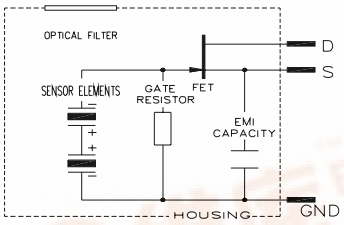


| Parameters | LHi 944 | | | | |
|---|---|---|---|---|---|
| | min | typical | max | units | condition |
| Element size | | 2x1 | | mm² | (2 elements) |
| Responsivity | 3 300 | 4000 | | V/W | 100°C, 1 Hz |
| Match | | 1 | 10 | % | |
| Noise | | 20 | 50 | µVpp | 25°C, 0,3...10Hz |
| Offset Voltage | 0,2 | | 1,55 | V | $R_S$ =47kΩ, 25°C |
| NEP | | $7{,}5 \times 10^{-10}$ | $28 \times 10^{-10}$ | W √Hz | 1Hz Bw, 100°C, 1 Hz |
| D* | $5 \times 10^{7}$ | $19 \times 10^{7}$ | | cm √Hz/W | 1Hz Bw,100°C, 1 Hz |
| Output Impedance | | 5 | 10 | kΩ | $R_S$ =47kΩ, 25°C |
| Operating Voltage | 2 | | 15 | V | $R_S$ =47kΩ, 25°C |
| Field of View, vertical | | 95 | | ° | unobstructed |
| horizontal | | 90 | | ° | unobstructed |
| Operating Temperature | -40 | | 85 | °C | non permanent |
| Storage Temperature | -40 | | 85 | °C | non permanent |

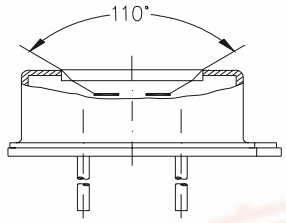


Field of View

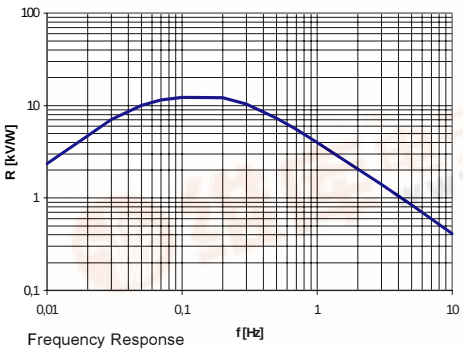


Frequency Response

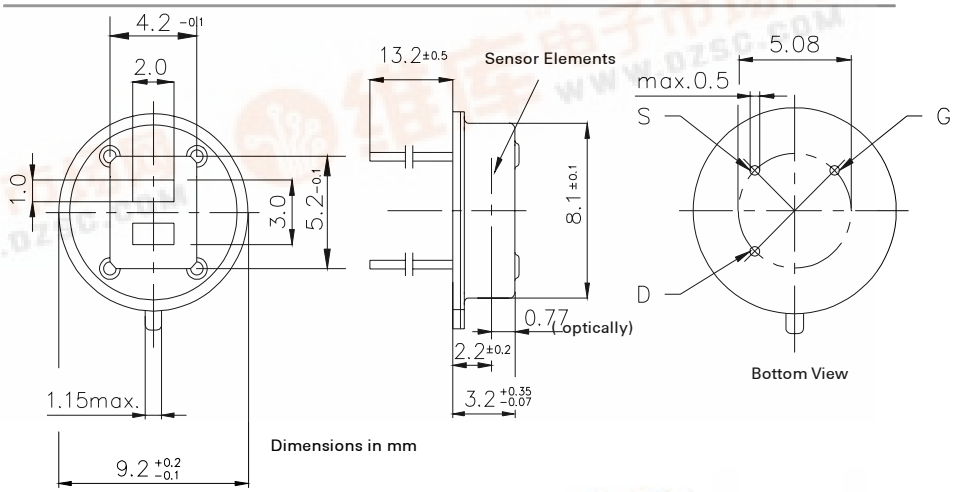


Dimensions in mm

Right for modification reserved / WS /, 29.6.2001

Europe:
PerkinElmer Optoelectronics GmbH
Wenzel Jaksch Str 31
Wiesbaden / Germany
Phone +49(0)611 492 0

USA:
PerkinElmer Optoelectronics
2175 Mission Colledge Blvd
Santa Clara, CA 95054
Phone +408 565 0830

Asia:
PerkinElmer Optoelectronics
47, Ayer Rajah Crescent #06-12
Singapore 139947
Phone +65 775 2022

DATASHEET