National Semiconductor

February 1995

LM566C Voltage Controlled Oscillator

General Description

The LM566CN is a general purpose voltage controlled oscillator which may be used to generate square and triangular waves, the frequency of which is a very linear function of a control voltage. The frequency is also a function of an external resistor and capacitor.

The LM566CN is specified for operation over the 0°C to +70°C temperature range.

Features

- Wide supply voltage range: 10V to 24V
- Very linear modulation characteristics
- High temperature stability
- Excellent supply voltage rejection
- 10 to 1 frequency range with fixed capacitor
- Frequency programmable by means of current, voltage, resistor or capacitor

Applications

- FM modulation
- Signal generation
- Function generation
- Frequency shift keying
- Tone generation

Connection Diagram

Dual-In-Line Package

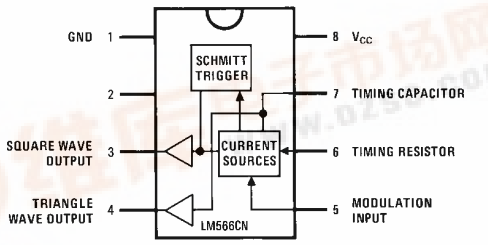

TL/H/7854–2

Order Number LM566CN
See NS Package Number N08E

Typical Application

1 kHz and 10 kHz TTL Compatible Voltage Controlled Oscillator

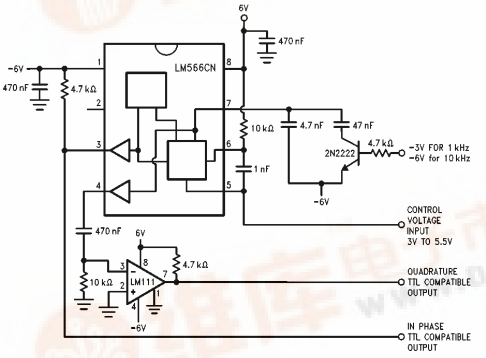

TL/H/7854–3

RRD-B30M115/Printed in U. S. A.

Absolute Maximum Ratings

If Military/Aerospace specified devices are required, please contact the National Semiconductor Sales Office/Distributors for availability and specifications.

Power Supply Voltage	26V
Power Dissipation (Note 1)	1000 mW
Operating Temperature Range, LM566CN	0°C to +70°C
Lead Temperature (Soldering, 10 sec.)	+260°C

Electrical Characteristics $V_{CC} = 12V$, $T_A = 25°C$, AC Test Circuit

Parameter	Conditions	LM566C			Units
		Min	Typ	Max	
Maximum Operating Frequency	R0 = 2k C0 = 2.7 pF	0.5	1		MHz
VCO Free-Running Frequency	$C_O = 1.5$ nF $R_O = 20k$ $f_O = 10$ kHz	−30	0	+30	%
Input Voltage Range Pin 5		¾ V_{CC}		V_{CC}	
Average Temperature Coefficient of Operating Frequency			200		ppm/°C
Supply Voltage Rejection	10–20V		0.1	2	%/V
Input Impedance Pin 5		0.5	1		MΩ
VCO Sensitivity	For Pin 5, From 8–10V, $f_O = 10$ kHz	6.0	6.6	7.2	kHz/V
FM Distortion	±10% Deviation		0.2	1.5	%
Maximum Sweep Rate			1		MHz
Sweep Range			10:1		
Output Impedance Pin 3			50		Ω
Pin 4			50		Ω
Square Wave Output Level	$R_{L1} = 10k$	5.0	5.4		Vp-p
Triangle Wave Output Level	$R_{L2} = 10k$	2.0	2.4		Vp-p
Square Wave Duty Cycle		40	50	60	%
Square Wave Rise Time			20		ns
Square Wave Fall Time			50		ns
Triangle Wave Linearity	+1V Segment at ½ V_{CC}		0.5		%

Note 1: The maximum junction temperature of the LM566CN is 150°C. For operation at elevated junction temperatures, maximum power dissipation must be derated based on a thermal resistance of 115°C/W, junction to ambient.

Applications Information

The LM566CN may be operated from either a single supply as shown in this test circuit, or from a split (±) power supply. When operating from a split supply, the square wave output (pin 3) is TTL compatible (2 mA current sink) with the addition of a 4.7 kΩ resistor from pin 3 to ground.

A 0.001 μF capacitor is connected between pins 5 and 6 to prevent parasitic oscillations that may occur during VCO switching.

$$f_O = \frac{2.4(V^+ - V_5)}{R_O C_O V^+}$$

where

$2K < R_O < 20K$

and V_5 is voltage between pin 5 and pin 1.

Schematic Diagram

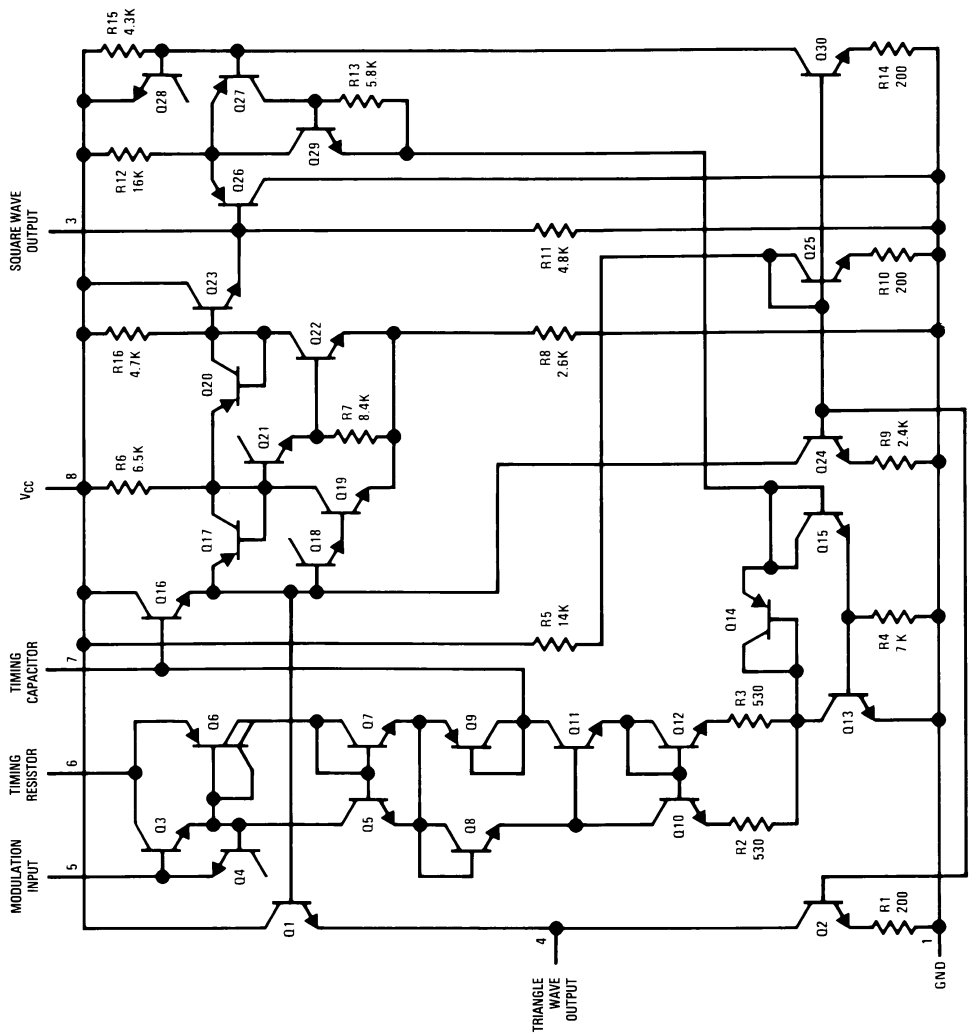

TL/H/7854–1

Typical Performance Characteristics

Operating Frequency as a Function of Timing Resistor

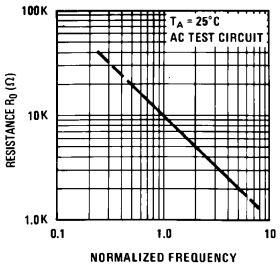

Operating Frequency as a Function of Timing Capacitor

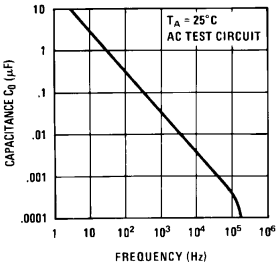

Normalized Frequency as a Function of Control Voltage

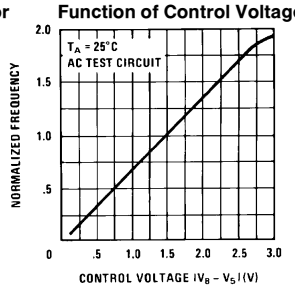

Power Supply Current

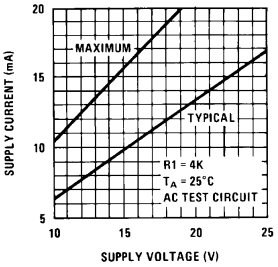

Temperature Stability

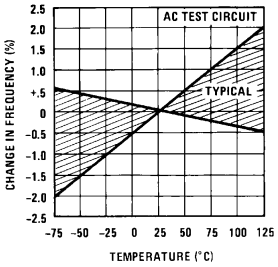

VCO Waveforms

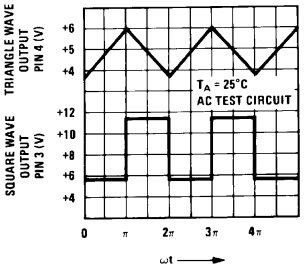

Frequency Stability vs Load Resistance (Square Wave Output)

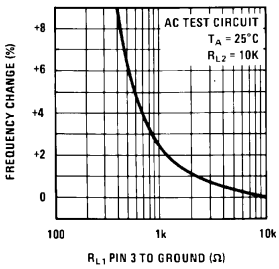

Frequency Stability vs Load Impedance (Triangle Output)

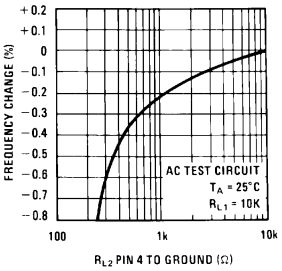

Square Wave Output Characteristics

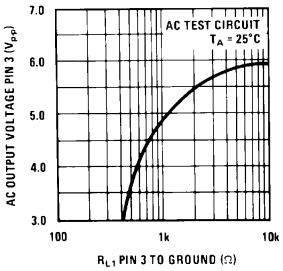

TL/H/7854–4

Triangle Wave Output Characteristics

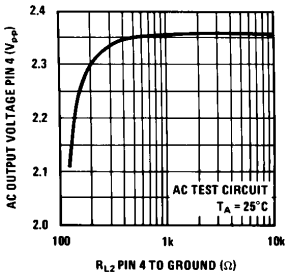

TL/H/7854–5

AC Test Circuit

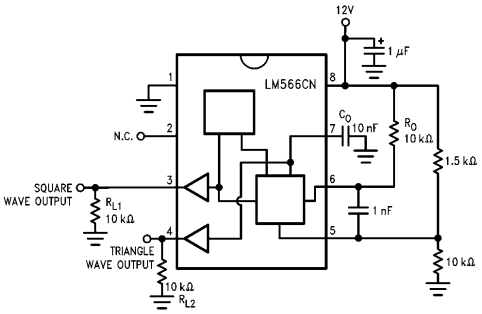

TL/H/7854–6

Physical Dimensions inches (millimeters)

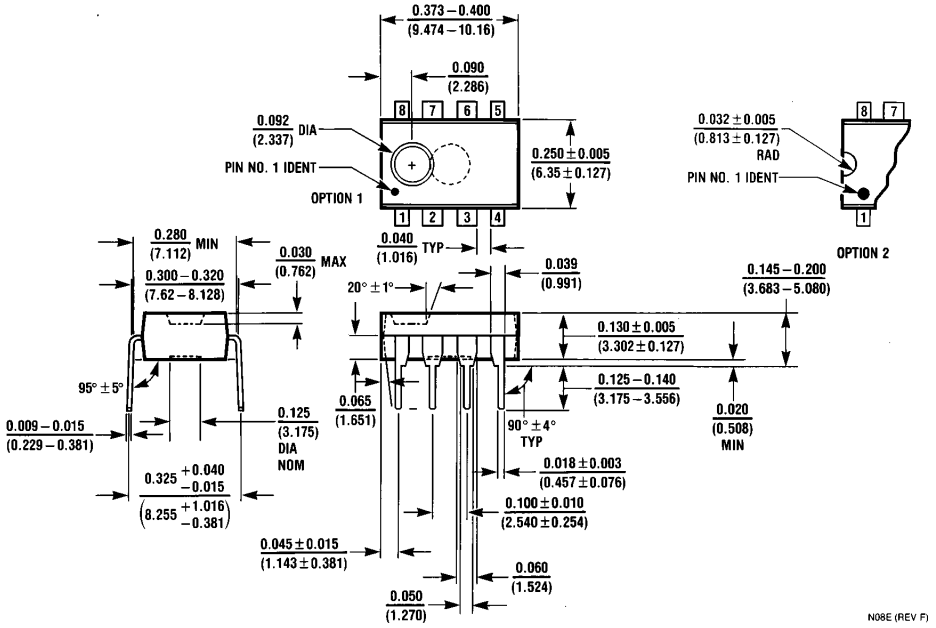

Molded Dual-In-Line Package (N)
Order Number LM566CN
NS Package Number N08E

LIFE SUPPORT POLICY

NATIONAL'S PRODUCTS ARE NOT AUTHORIZED FOR USE AS CRITICAL COMPONENTS IN LIFE SUPPORT DEVICES OR SYSTEMS WITHOUT THE EXPRESS WRITTEN APPROVAL OF THE PRESIDENT OF NATIONAL SEMICONDUCTOR CORPORATION. As used herein:

1. Life support devices or systems are devices or systems which, (a) are intended for surgical implant into the body, or (b) support or sustain life, and whose failure to perform, when properly used in accordance with instructions for use provided in the labeling, can be reasonably expected to result in a significant injury to the user.
2. A critical component is any component of a life support device or system whose failure to perform can be reasonably expected to cause the failure of the life support device or system, or to affect its safety or effectiveness.

National Semiconductor Corporation
1111 West Bardin Road
Arlington, TX 76017
Tel: 1(800) 272-9959
Fax: 1(800) 737-7018

National Semiconductor Europe
Fax: (+49) 0-180-530 85 86
Email: cnjwge@tevm2.nsc.com
Deutsch Tel: (+49) 0-180-530 85 85
English Tel: (+49) 0-180-532 78 32
Français Tel: (+49) 0-180-532 93 58
Italiano Tel: (+49) 0-180-534 16 80

National Semiconductor Hong Kong Ltd.
13th Floor, Straight Block,
Ocean Centre, 5 Canton Rd.
Tsimshatsui, Kowloon
Hong Kong
Tel: (852) 2737-1600
Fax: (852) 2736-9960

National Semiconductor Japan Ltd.
Tel: 81-043-299-2309
Fax: 81-043-299-2408