LINEAR SYSTEMS

Linear Integrated Systems

LS840 LS841 LS842

LOW NOISE LOW DRIFT
LOW CAPACITANCE
MONOLITHIC DUAL N-CHANNEL JFET

FEATURES	
LOW NOISE	e_n = 8nV/√Hz TYP.
LOW LEAKAGE	I_G = 10pA TYP.
LOW DRIFT	$\lvert\Delta V_{GS1-2}/\Delta T\rvert$ = 5µV/°C max.
LOW OFFSET VOLTAGE	$\lvert V_{GS1-2}\rvert$ = 2mV TYP.

ABSOLUTE MAXIMUM RATINGS NOTE 1 @ 25°C (unless otherwise noted)		
Maximum Temperatures		
Storage Temperature		-65° to +150°C
Operating Junction Temperature		+150°C
Maximum Voltage and Current for Each Transistor NOTE 1		
$-V_{GSS}$	Gate Voltage to Drain or Source	60V
$-V_{DSO}$	Drain to Source Voltage	60V
$-I_{G(f)}$	Gate Forward Current	50mA
Maximum Power Dissipation		
Device Dissipation @ Free Air - Total		400mW @ +125°C

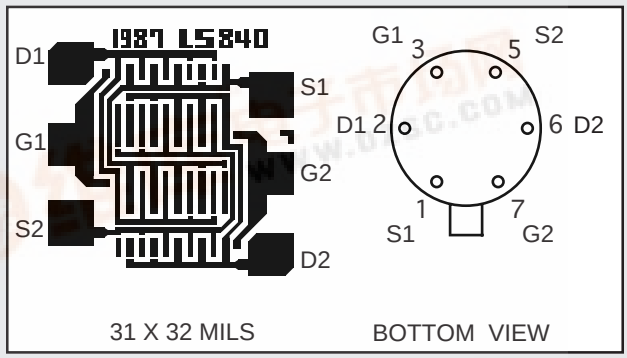

ELECTRICAL CHARACTERISTICS @ 25°C (unless otherwise noted)

SYMBOL	CHARACTERISTICS	LS840	LS841	LS842	UNITS	CONDITIONS	
$\lvert\Delta V_{GS1-2}/\Delta T\rvert$ max.	Drift vs. Temperature	5	10	40	µV/°C	V_{DG}= 20V T_A= -55°C to +125°C	I_D= 200µA
$\lvert V_{GS1-2}\rvert$ max.	Offset Voltage	5	10	25	mV	V_{DG}= 20V	I_D= 200µA

SYMBOL	CHARACTERISTICS	MIN.	TYP.	MAX.	UNITS	CONDITIONS		
BV_{GSS}	Breakdown Voltage	60	--	--	V	V_{DS}= 0	I_D= 1nA	
BV_{GGO}	Gate-to-Gate Breakdown	60	--	--	V	I_G= 1nA	I_D= 0	I_S= 0
	TRANSCONDUCTANCE							
Y_{fss}	Full Conduction	1000		4000	µmho	V_{DG}= 20V	V_{GS}= 0	f= 1kHz
Y_{fs}	Typical Conduction	500		1000	µmho	V_{DG}= 20V	I_D= 200µA	
$\lvert Y_{fs1-2}/Y_{fs}\rvert$	Mismatch	--	0.6	3	%			
	DRAIN CURRENT							
I_{DSS}	Full Conduction	0.5	2	5	mA	V_{DG}= 20V	V_{GS}= 0	
$\lvert I_{DSS1-2}/I_{DSS}\rvert$	Mismatch at Full Conduction	--	1	5	%			
	GATE VOLTAGE							
V_{GS}(off) or V_P	Pinchoff Voltage	1	2	4.5	V	V_{DS}= 20V	I_D= 1nA	
V_{GS}	Operating Range	0.5	--	4	V	V_{DS}= 20V	I_D= 200µA	
	GATE CURRENT							
$-I_G$	Operating	--	10	50	pA	V_{DG}= 20V	I_D= 200µA	
$-I_G$	High Temperature	--	--	50	nA	V_{DG}= 20V	I_D= 200µA	T_A= +125°C
$-I_G$	Reduced VDG	--	5	--	pA	V_{DG}= 10V	I_D= 200µA	
I_{GSS}	At Full Conduction	--	--	100	pA	V_{DG}= 20V	V_{DS}= 0	

SYMBOL	CHARACTERISTICS	MIN.	TYP.	MAX.	UNITS	CONDITIONS	
	OUTPUT CONDUCTANCE						
Y_{OSS}	Full Conduction	--	--	10	µmho	V_{DG}= 20V	V_{GS}= 0
Y_{OS}	Operating	--	0.1	1	µmho	V_{DG}= 20V	I_D= 200µA
$\|Y_{OS1-2}\|$	Differential	--	0.01	0.1	µmho		
	COMMON MODE REJECTION						
CMR	-20 log $\|\Delta V_{GS1-2}/\Delta V_{DS}\|$	--	100	--	dB	ΔV_{DS}= 10 to 20V	I_D= 200µA
CMR		--	75	--	dB	ΔV_{DS}= 5 to 10V	I_D= 200µA
	NOISE						
NF	Figure	--	--	0.5	dB	V_{DS}= 20V f= 100Hz	V_{GS}= 0 R_G= 10MΩ NBW= 6Hz
e_n	Voltage	--	--	10	nV/√Hz	V_{DS}= 20V NBW= 1Hz	I_D= 200µA f= 1KHz
e_n	Voltage	--	--	15	nV/√Hz	V_{DS}= 20V NBW= 1Hz	I_D= 200µA f= 10Hz
	CAPACITANCE						
C_{ISS}	Input	--	4	10	pF	V_{DS}= 20V	I_D= 200µA
C_{RSS}	Reverse Transfer	--	1.2	5	pF		
C_{DD}	Drain-to-Drain	--	0.1	--	pF	V_{DG}= 20V	I_D= 200µA

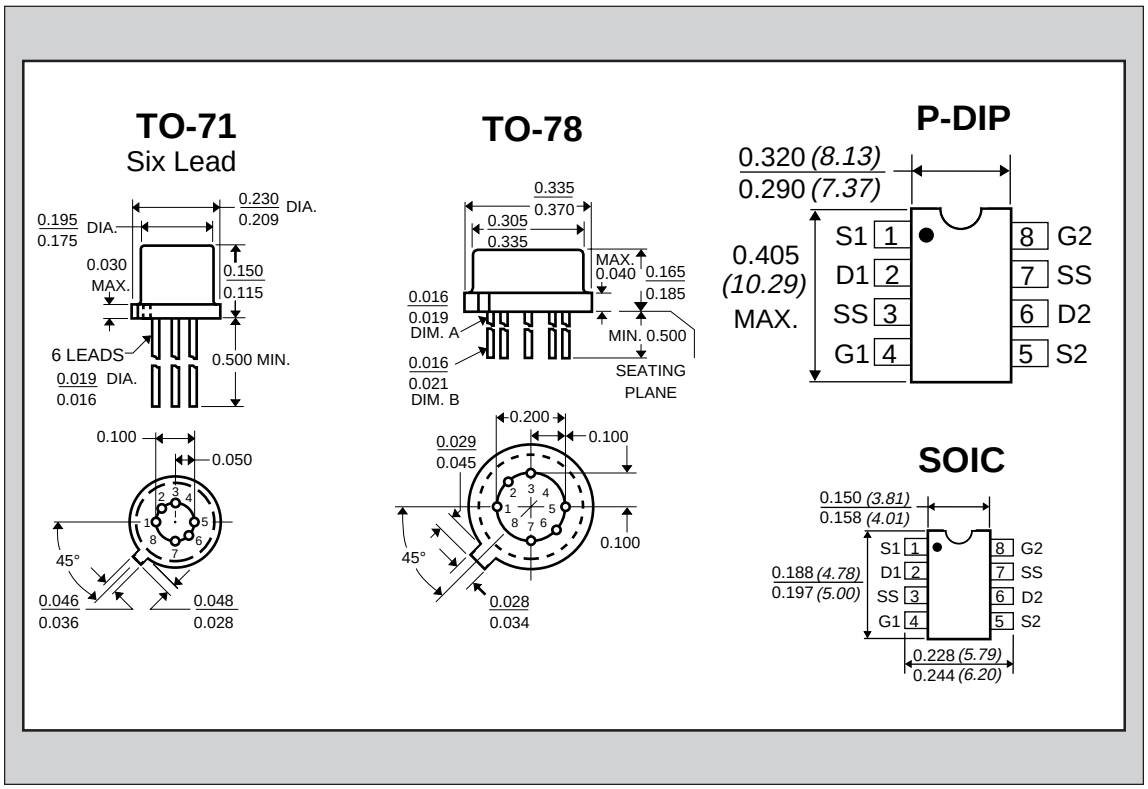

NOTES:

1. These ratings are limiting values above which the serviceability of any semiconductor may be impaired.