查询LT5504供应商
捷多邦，专业PCB打样工厂，24小时加急出货

INITIAL RELEASE
Final Electrical Specifications
LT5504

800MHz to 2.7GHz RF Measuring Receiver

January 2002

FEATURES

- **RF Frequency Range: 800MHz to 2.7GHz**
- **Ultra Wide Dynamic Range: 80dB Over Full Frequency Range and Over Temperature**
- **Wide Power Supply Range: 2.7V to 5.25V**
- Low Supply Current: 14.7mA at 3V
- Shutdown Current: 0.2µA
- 8-Lead MSOP Package

APPLICATIONS

- RSSI Measurements
- Receive AGC
- Transmit Power Control
- ASK and Envelope Demodulation
- GSM/TDMA/CDMA/WCDMA

DESCRIPTION

The LT®5504 is an 800MHz to 2700MHz monolithic integrated measuring receiver, capable of detecting a wide dynamic range RF signal from –75dBm to +5dBm. The logarithm of the RF signal is precisely converted into a linear DC voltage. The LT5504 consists of RF/IF limiters, an LO buffer amplifier, a limiting mixer, a 3rd-order 450MHz integrated low pass filter, RF/IF detectors and an output interface. The ultrawide dynamic range is achieved by simultaneously measuring the RF signal and a down-converted IF signal obtained using the on-chip mixer and an external local oscillator. The RF- and IF-detected signals are summed to generate an accurate linear DC voltage proportional to the input RF voltage (or power) in dB. The output is buffered with a low output impedance driver.

LT, LTC and LT are registered trademarks of Linear Technology Corporation.

TYPICAL APPLICATION

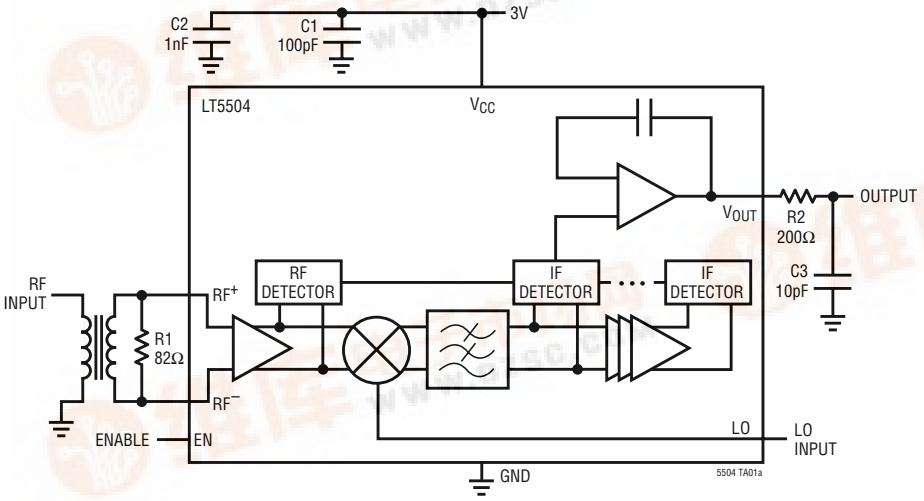

Output Voltage and Slope Variation vs RF Input Power

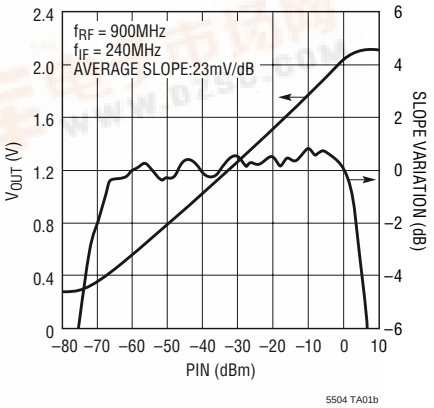

找PDF 维库一下 pdf.dzsc.com

ABSOLUTE MAXIMUM RATINGS

(Note 1)

Power Supply Voltage 5.5V
V_{OUT}, EN ..... 0,V_{CC}
LO Input Power 6dBm
RF Input Power Differential (50Ω, 5.5V) 24dBm
RF Input Power Single-Ended (50Ω, 5.5V) 18dBm
Operating Ambient Temperature .....–40°C to 85°C
Storage Temperature Range .....–65°C to 150°C
Lead Temperature (Soldering, 10 sec) ..... 300°C

PACKAGE/ORDER INFORMATION

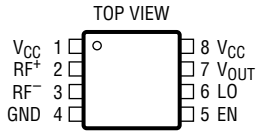

MS8 PACKAGE
8-LEAD PLASTIC MSOP

T_{JMAX} = 150°C, θ_{JA} = 160°C/W

ORDER PART NUMBER
LT5504EMS8
MS8 PART MARKING
LTGP

Consult LTC Marketing for parts specified with wider operating temperature ranges.

ELECTRICAL CHARACTERISTICS

T_A = 25°C. V_{CC} = 3V, P_{LO} = –10dBm, unless otherwise noted. (Notes 2, 3)

SYMBOL	PARAMETER	CONDITIONS	MIN	TYP	MAX	UNITS
RF Input						
f_{RF}	Frequency Range			800 to 2700		MHz
	Input Impedance	Note 6				
	DC Voltage	Internally Biased		1.7		V
LO Input						
f_{LO}	Frequency Range			850 to 3100		MHz
	Input Return Loss	Internally Matched		14		dB
	DC Voltage	Internally Biased		0.82		V
P_{LO}	LO Power			–16 to –8		dBm
	LO to RF Leakage	900MHz 1.9GHz 2.5GHz		–50 –45 –40		dBc dBc dBc
IF Frequency						
f_{IF}	Frequency			50 to 450		MHz
Output Voltage at f_{RF} = 900MHz, f_{LO} = 1140MHz						
	Linear Dynamic Range (Note 4)		66	75		dB
	Output Voltage	Input = –70dBm Input = –20dBm Input = 0dBm		0.4 1.6 2.1		V V V
	Average Slope	Input from –50dBm to –20dBm	16	23		mV/dB
Output Voltage at f_{RF} = 1900MHz, f_{LO} = 2140MHz						
	Linear Dynamic Range (Note 4)		60	72		dB
	Output Voltage	Input = –70dBm Input = –20dBm Input = 0dBm		0.35 1.52 1.9		V V V
	Average Slope	Input from –50dBm to –20dBm	16	23		mV/dB

ELECTRICAL CHARACTERISTICS

T_A = 25°C. V_{CC} = 3V, P_{LO} = –10dBm, unless otherwise noted. (Notes 2, 3)

SYMBOL	PARAMETER	CONDITIONS	MIN	TYP	MAX	UNITS
Output Voltage at f_{RF} = 2500MHz, f_{LO} = 2260MHz						
	Linear Dynamic Range (Note 4)		58	70		dB
	Output Voltage	Input = –70dBm Input = –20dBm Input = 0dBm		0.3 1.45 1.8		V V V
	Average Slope	Input from –50dBm to –20dBm	16	23		mV/dB
Output Interface						
	Current Drive Capability			400		µA
	Output Noise Spectral Density	At 100KHz At 10MHz		3.9 0.32		µV/√Hz µV/√Hz
	Output Response Time (Note 5)	RF Input Pin from No Signal to 0dBm		200		ns
Power Up/Down						
t_{ON}	Turn ON Time (Note 5)			400		ns
	Turn OFF Time (Note 5)			4		µs
	Input Resistance			30		kΩ
	Enable Turn ON Voltage (Note 7)			0.6 • V_{CC}		V
	Disable Turn OFF Voltage (Note 7)			0.4 • V_{CC}		V
Power Supply						
V_{CC}	Supply Voltage		2.7		5.25	V
I_{CC}	Supply Current			14.7	22	mA
	Shutdown Current			0.2	30	µA

Note 1: Absolute Maximum Ratings are those values beyond which the life of a device may be impaired.

Note 2: Tests are performed as shown in the configuration of Figure 5.

Note 3: Specifications over the –40°C to 85°C temperature range are guaranteed by design, characterization and correlation with statistical process controls.

Note 4: The Linear Dynamic Range is defined as the range over which the output slope is at least 50% of the average slope from –50dBm to –20dBm.

Note 5: The output voltage is settled to the full specification within 1dB.

Note 6: Refer to Figure 1 and Applications Information.

Note 7: Refer to Pin Functions description.

TYPICAL PERFORMANCE CHARACTERISTICS

Output Voltage vs RF Input Power and Frequency

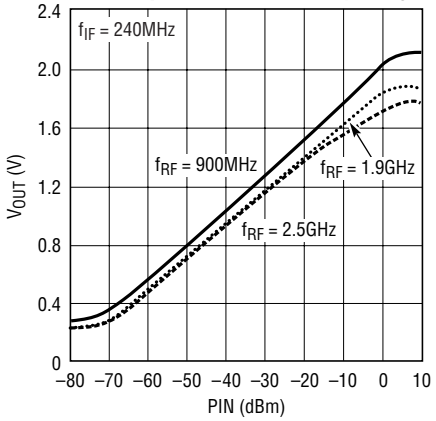

Supply Current vs Supply Voltage and Temperature

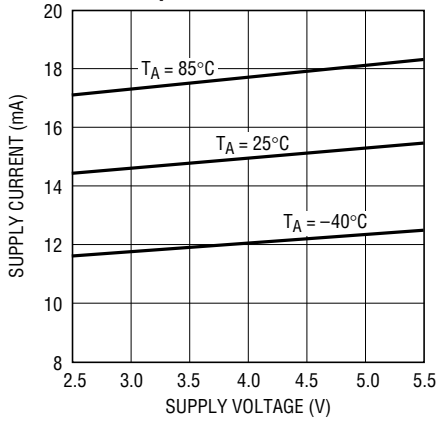

Power Up Response Time

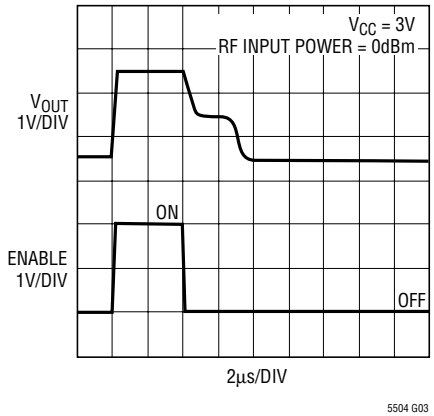

Output Slope Variation vs RF Input Power and Frequency

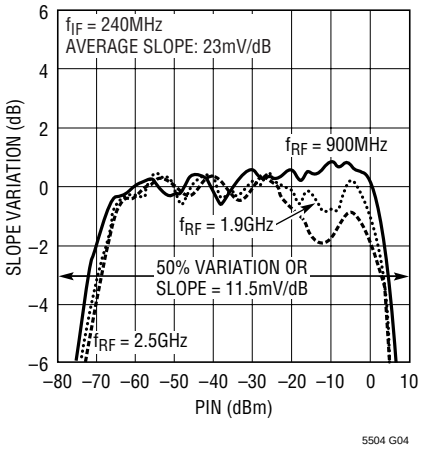

Output Voltage and Slope Variation vs RF Input Power and Temperature

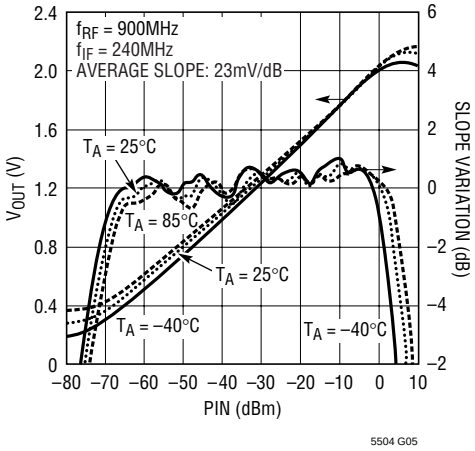

Output Voltage and Slope Variation vs RF Input Power and Temperature

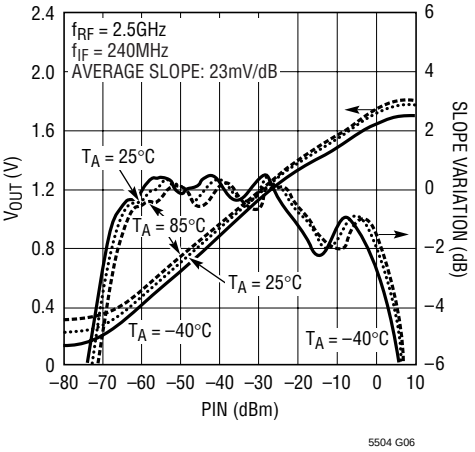

Output Voltage and Slope Variation vs RF Input Power and Temperature

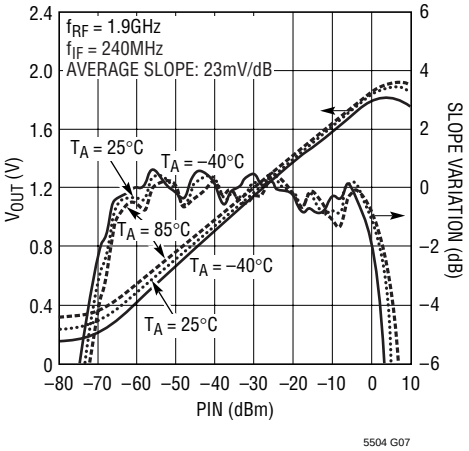

Output Voltage and Slope Variation vs RF Input Power and IF Frequency

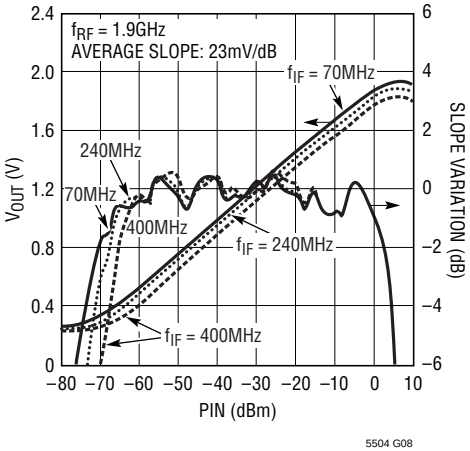

Output Voltage and Slope Variation vs RF Input Power and Supply Voltage

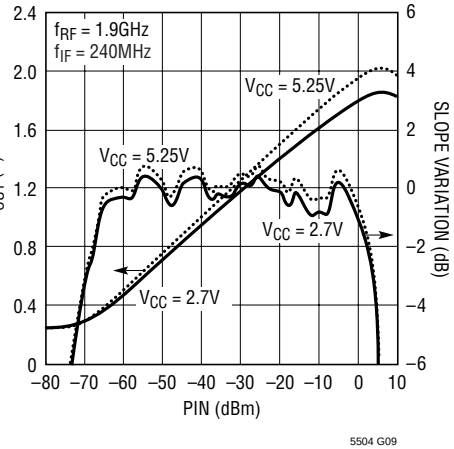

TYPICAL PERFORMANCE CHARACTERISTICS

Output Voltage and Slope Variation vs RF Input Power and Temperature

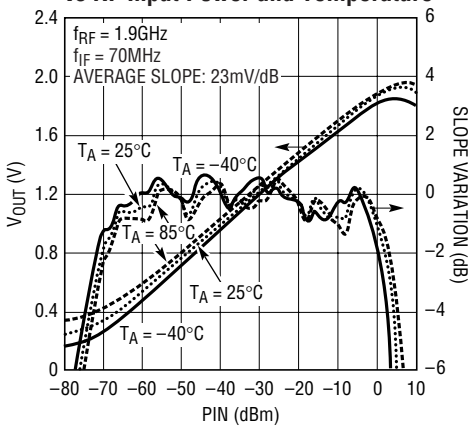

Output Voltage and Slope Variation vs RF Input Power and Temperature

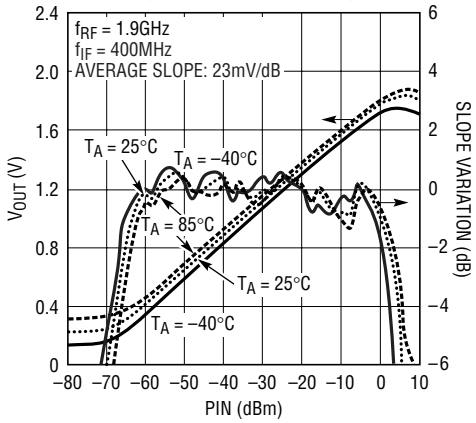

Output Response Time

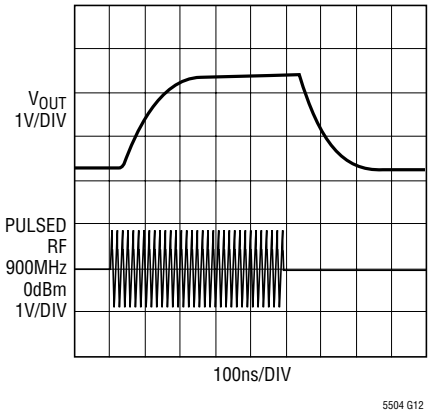

PIN FUNCTIONS

V_{CC} (Pins 1, 8): Power Supply Pins. These pins must be tied together at the part as close as possible, and should be decoupled using 1000pF capacitors.

RF^+ (Pin 2): Positive RF Input Pin.

RF^- (Pin 3): Negative RF Input Pin.

GND (Pin 4): Ground Pin.

EN (Pin 5): Enable Pin. The on/off threshold voltage is about $V_{CC}/2$. When the input voltage is higher than $0.6 \bullet V_{CC}$, the circuit is completely turned on. When the input voltage is less than $0.4 \bullet V_{CC}$, the circuit is turned off.

LO (Pin 6): Local Oscillator Input Pin.

V_{OUT} (Pin 7): Output Pin.

BLOCK DIAGRAM

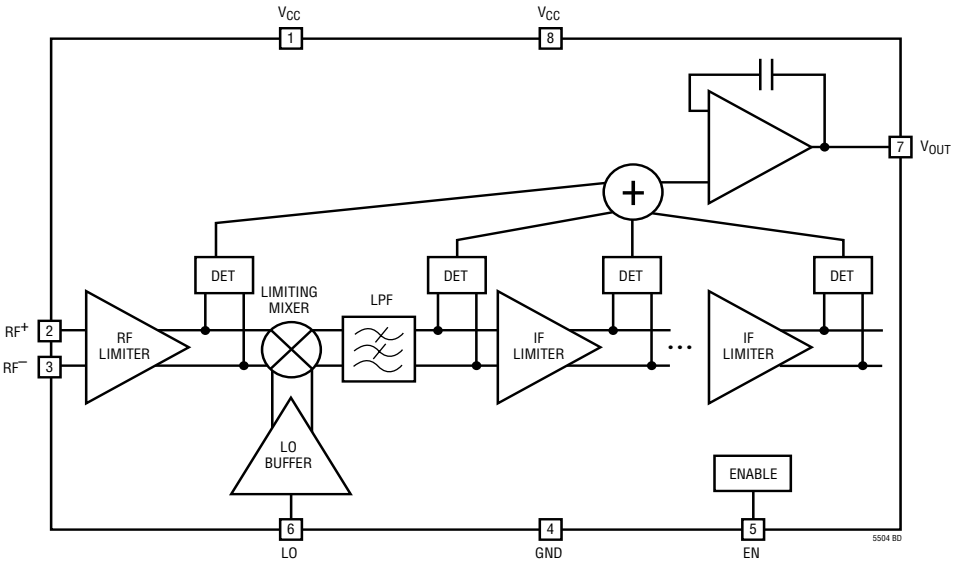

APPLICATIONS INFORMATION

The LT5504 consists of the following sections: RF/IF limiters, limiting mixer, RF/IF detectors, LO buffer amplifier, 3rd-order integrated low pass filter (LPF), output interface and bias circuitry.

An RF signal ranging from 800MHz to 2.7GHz is detected by the RF and IF detectors using a proprietary technique. The down-converted IF signal is band limited by the on-chip LPF, reducing broadband noise, and thus an ultrawide dynamic range signal can be measured. The RF measuring receiver is essentially a logarithmic voltage detector. The measured output voltage is directly proportional to the RF signal voltage. An internal temperature compensation circuit results in a highly temperature-stable output voltage.

RF Limiter

The differential input impedance of the RF limiter is shown in Figure 1. A 1:1 input transformer can be used to achieve 50Ω broadband matching with an 82Ω shunt resistor (R1) at the inputs as shown in Figure 5.

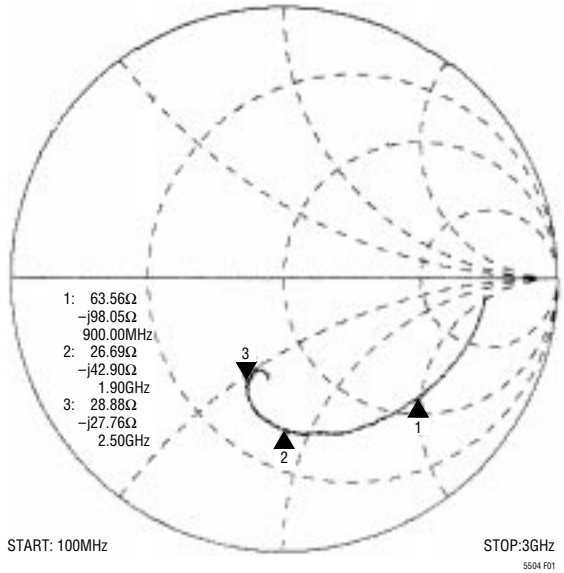

Figure 1. Differential RF Input Impedance

The 1:1 RF input transformer can also be replaced with a narrow band single-ended-to-differential conversion circuit using three discrete elements as shown in Figure 2. Their nominal values are listed in Table 1. Due to the parasitics of the PCB, these values may require adjustment.

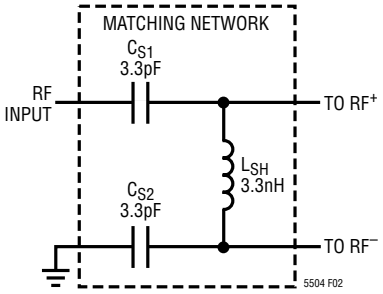

Figure 2. RF Input Matching Network at 1900MHz

Figure 3 shows the output voltage vs RF input power response for these two input terminations. The voltage gain of the single-ended-to-differential conversion circuit is:

$$GAIN = 20 \bullet LOG\sqrt{\frac{R_{IN}}{50}} = 3dB,$$

where R_{IN} = 100Ω is the narrow band input impedance.

Thus, the output voltage curve in this case is shifted to the left by about 3dB.

Table 1. The Component Values of Matching Network L_{SH}, C_{S1} and C_{S2}

f_{IF} (MHz)	L_{SH}(nH)	C_{S1}/C_{S2}(pF)
900	12.0	3.9
1900	3.3	3.3
2500	2.7	2.2
2700	2.4	1.5

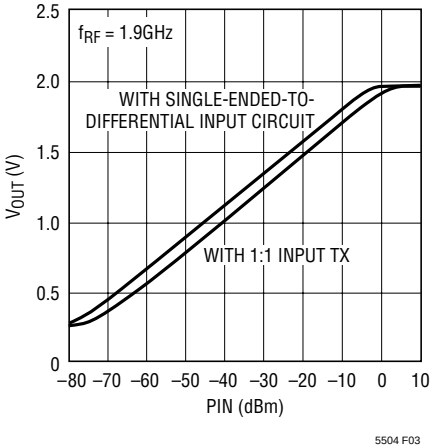

Figure 3. The Output Voltage vs RF Input Power

APPLICATIONS INFORMATION

Limiting Mixer and LPF

The amplified RF signal is down-converted using the limiting mixer and LO signal. The resulting signal is filtered by the 3rd-order, 450MHz, integrated low pass filter (LPF). Only the desired IF signal is passed to the IF limiters for further detection. Any other mixing products, including LO feedthrough, are much reduced to maximize sensitivity. The receiver's sensitivity is thus defined by the LPF bandwidth.

IF Limiter

The IF signal is then amplified through the multiple limiter stages for further signal detection. All DC offsets, including LO signal self-mixing, are eliminated by an internal DC offset cancellation circuit. Nevertheless, care should be taken in component placement and in PCB layout to minimize LO coupling to the RF port.

Output Interface

The output interface of the LT55O4 is shown in Figure 4. The output currents from the RF and IF detectors are summed and converted into an output voltage, V_{OUT}. The maximum charging current available to the output load is about 400µA. An internal compensation capacitor C_C is used to guarantee stable operation for a large capacitive output load. The slew rate is 80V/µs and the small signal output bandwidth is approximately 5MHz when the output is resistively terminated. When the output is loaded with a large capacitor C_L, the slew rate is limited to 400µA/C_L. For example, the slew rate is reduced to 4V/µs when C_L = 100pF.

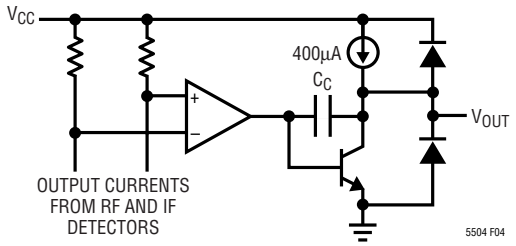

Figure 4. Simplified Circuit Schematic of the Output Interface

Applications

The LT5504 can be used as a self-standing signal strength-measuring receiver (RSSI) for a wide range of input signals from –75dBm to +5dBm, for frequencies from 800MHz to 2.7GHz.

The LT5504 can be used as a demodulator for AM and ASK modulated signals with data rates up to 5MHz. Depending on specific application needs, the RSSI output can be split into two branches, providing AC coupled data output, and DC coupled, RSSI output for signal strength measurements and AGC. Refer to Figure 5.

The LT5504 can also be used as a wide range RF power detector for transmit power control.

TYPICAL APPLICATIONS

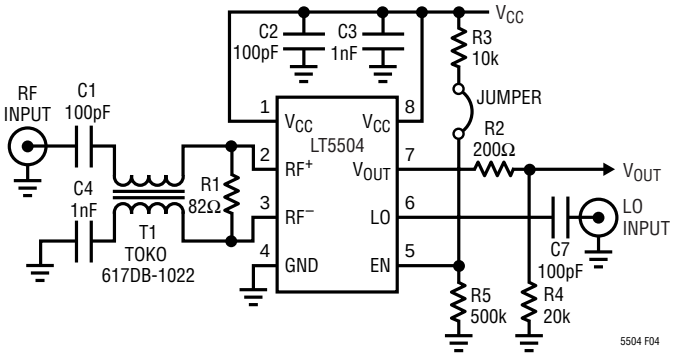

Figure 5. LT5504 Evaluation Board Circuit Schematic

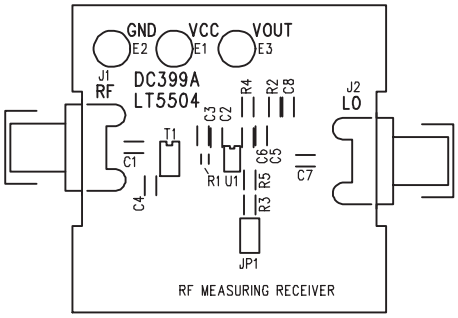

Figure 6.Component Side Silkscreen of Evaluation Board

TYPICAL APPLICATION

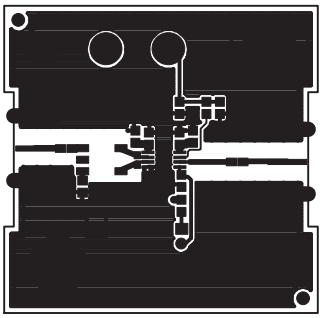

Figure 7. Component Side Layout of Evaluation Board

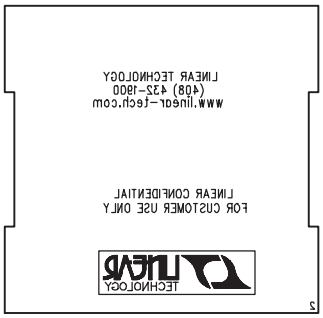

Figure 8.Bottom Side Silkscreen of Evaluation Board

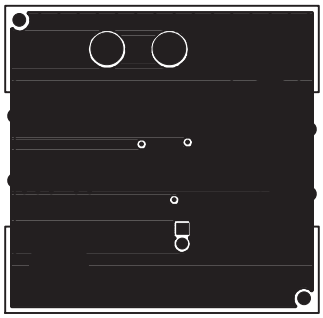

Figure 9. Bottom Side Layout of Evaluation Board

PACKAGE DESCRIPTION

MS8 Package
8-Lead Plastic MSOP
(Reference LTC DWG # 05-08-1660)

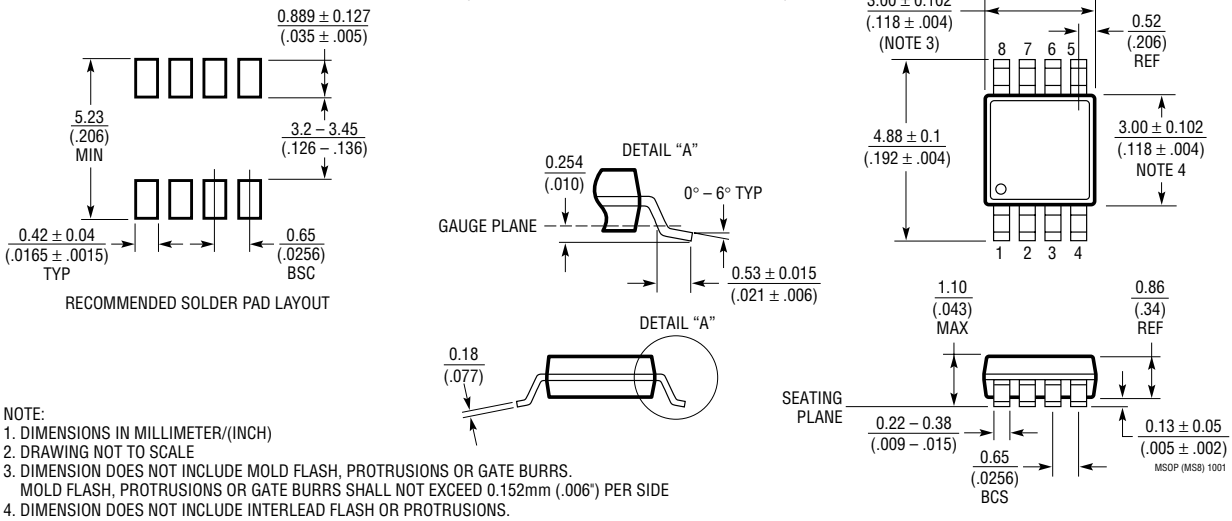

NOTE:
1. DIMENSIONS IN MILLIMETER/(INCH)
2. DRAWING NOT TO SCALE
3. DIMENSION DOES NOT INCLUDE MOLD FLASH, PROTRUSIONS OR GATE BURRS.
   MOLD FLASH, PROTRUSIONS OR GATE BURRS SHALL NOT EXCEED 0.152mm (.006") PER SIDE
4. DIMENSION DOES NOT INCLUDE INTERLEAD FLASH OR PROTRUSIONS.
   INTERLEAD FLASH OR PROTRUSIONS SHALL NOT EXCEED 0.152mm (.006") PER SIDE
5. LEAD COPLANARITY (BOTTOM OF LEADS AFTER FORMING) SHALL BE 0.102mm (.004") MAX

RELATED PARTS

PART NUMBER	DESCRIPTION	COMMENTS
LT5500	1.8GHz to 2.7GHz Receiver Front End	LNA with Dual Gain Setting, Double Balanced Mixer, Internal LO Buffer, 1.8V to 5.25V
LT5502	400MHz Quadrature IF Demodulator with RSSI	IF Frequency Range, 70MHz to 400MHz, 84dB Limiting IF Gain 90db Linear RSSI Range, 1.8V to 5.25V Supply
LT5503	1.2GHz to 2.7GHz Direct IQ Modulator and Mixer	1.8V to 5.25V Supply Range, 28mA Supply Current, 4-Step Output Power Control
LTC5505	RF Power Detector in SOT-23	Internal Schottky Diode with Buffer, >40dB Dyamic Range, Low 0.5mA Supply Current, 2.7V ≤ V_{CC} ≤ 6V, 300MHz to 3GHz

LT/TP 0102 1.5K • PRINTED IN USA

This datasheet has been download from:

www.datasheetcatalog.com

Datasheets for electronics components.