查询LX1995供应商 捷多邦，专业PCB打样工厂，24小时加急出货

MINIATURE LED DRIVER
LX1995 EVUALATION KIT

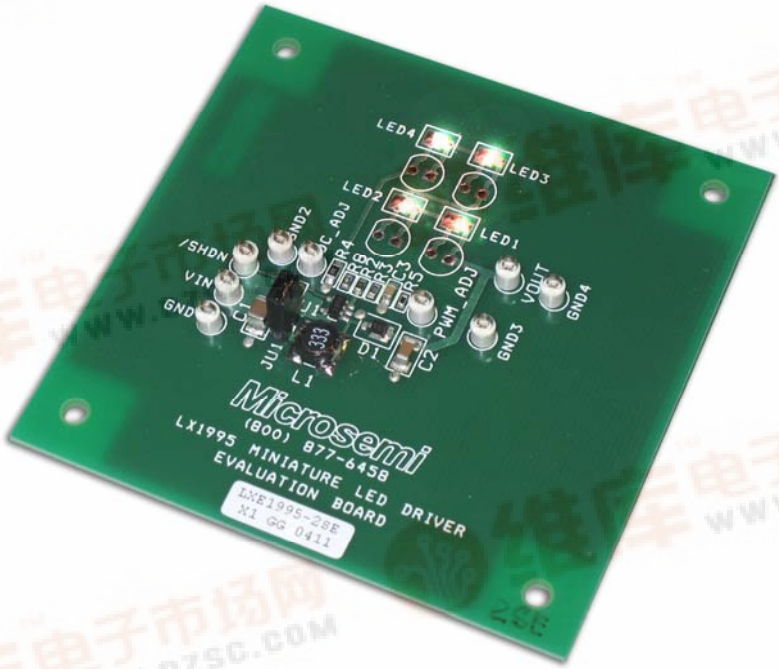

Microsemi
INTEGRATED PRODUCTS

Copyright © 2004

TABLE OF CONTENTS

LX1995 EVAL Introduction 3
Schematic for LX1995 Evaluation Board 4
Hook up 5
Connections 6
Printed Circuit Board 7
Bill of Materials 8

INTRODUCING TO PRODUCT

The LX1995 Evaluation Board (EB) is available from Microsemi for evaluating the performance of the LX1995 LED driver integrated circuit. (See picture 1) The EB contains a small amount of support circuitry that enhances performance in different dimming configurations. (See schematic 1.) In a typical application, some of this circuitry would be eliminated.

KEY FEATURES OF THE LX1995

- < 1µA Shutdown Current
- > 85% Maximum Efficiency
- Efficient at Low Current Levels
- < 70µA Quiescent Supply Current in Operating Mode
- V_{IN} Range 1.6V to 5.5V
- Logic Controlled Shutdown
- Dimming Options: PWM or Varying DC Voltage
- Tiny 5-Pin TSOT Package
- Smallest External Components

APPLICATIONS

- Pagers
- Wireless Phones
- PDAs
- LED Driver
- Digital Camera Displays
- GPS Receivers

PART SPECIFIC INFORMATION

Part Number	Switch Current	Description
LX1995-1CSG	325mA	High Efficiency LED Driver
LX1995-1CSE		
LX1995-2CSG	500mA	
LX1995-2CSE		

Table 1 – Part Information

IC	EVALUATION BOARDS
LX1995-1CSG	LX1995-1SG EVAL
LX1995-1CSE	LX1995-1SE EVAL
LX1995-2CSG	LX1995-2SG EVAL
LX1995-2CSE	LX1995-2SE EVAL

Table 2 – Evaluation Board Information

Copyright © 2004

SCHEMATIC FOR LX1995 EVAL

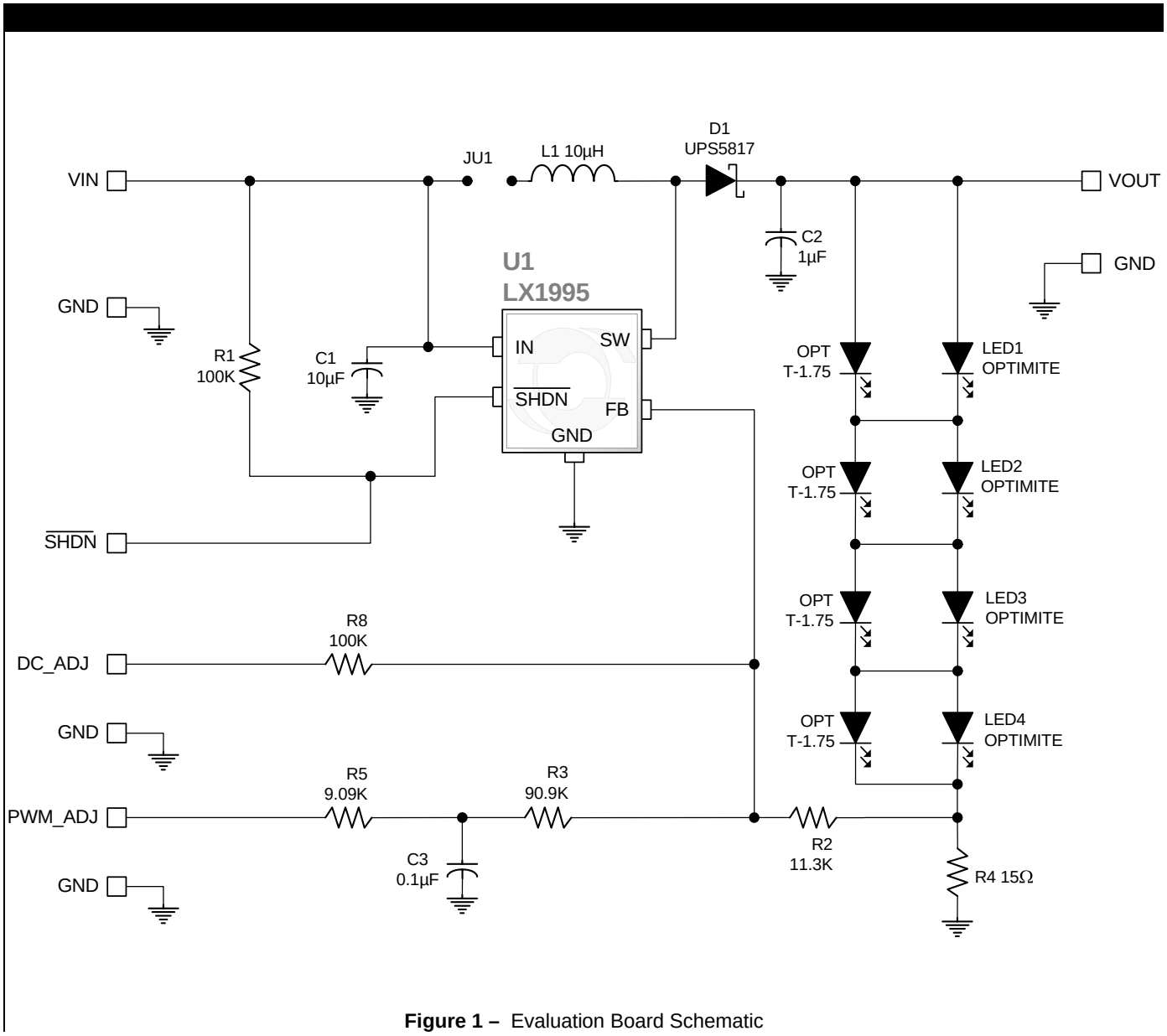

Figure 1 – Evaluation Board Schematic

LX1995 EVALUATION HOOK UP

The following is a demonstration scenario that can be used to evaluate the LX1995:

Directions for hook up (DC dimming mode):

1. Install jumper JU1.
2. Connect a 3.6V typical 1A power source between VIN and GND terminals.
3. Apply a 1.5V DC signal to the DC_ADJ terminal. Signal GND can be referenced to GND2 for convenience.
4. Vary the DC signal from 0V to 3V and observe the LEDs dimming. (Measure LED current from LED4 cathode to GND2 if desired. I = V / 15.

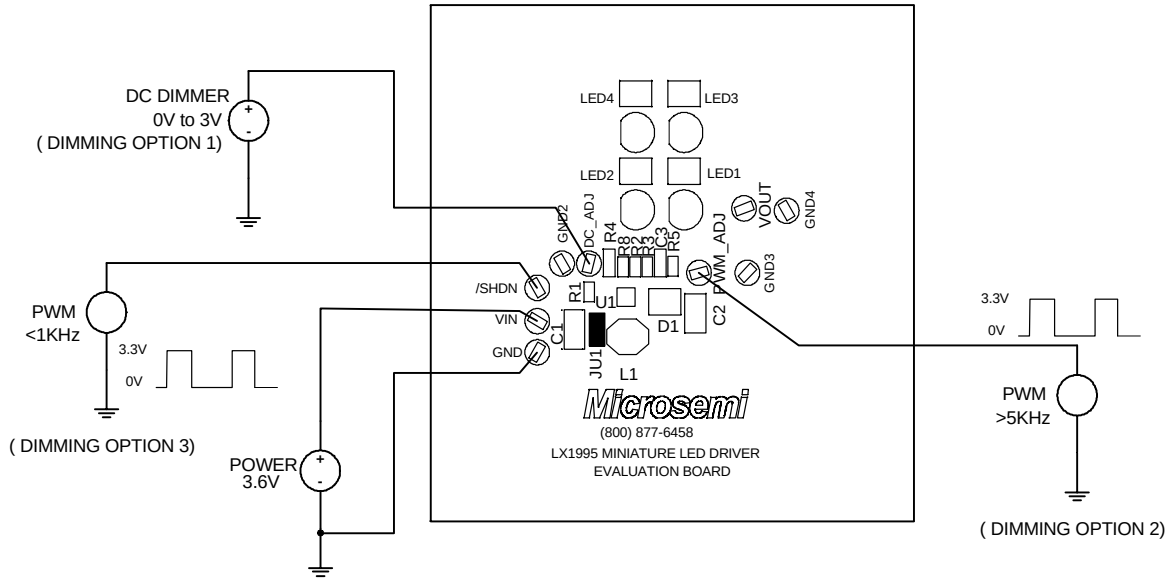

Figure 2 – Typical Hook Up for the LX1995 Eval Board

CONNECTIONS

The LX1995 Evaluation Board has 9 test lead attachment point for applying power and dimming inputs or for monitoring voltages.

Function	Board Label	Connection
Input Power	VIN	Power supply (3.55V+/- 1.95V).
Power Ground	GND	Common power supply ground.
Enable	/SHDN	Connect to GND to disable LX1995. A <1KHz logic PWM signal can also be applied.
DC dimming	DC_ADJ	Apply a 0 to 3V DC dimming input
PWM dimming	PWM_ADJ	Apply a >5KHz 3.3V logic PWM signal.
Output Voltage	VOUT	Test point to monitor voltage across all LEDs.
Signal Ground	GND#	Multiple common grounds for probes. etc

Table 3 – Connection Points

Hints: For best results, use only one of the three possible LED dimming methods at a time. LED current can be monitored by measuring the voltage from LED4 cathode to GND and dividing by 15 (the value of R4).

NOTE: Jumper JU1 must be connected for the LX1995 to function. This jumper can be replaced with a wire loop so the inductor current waveform can be observed using a current probe.

PRINTED CIRCUIT BOARD LAYOUT

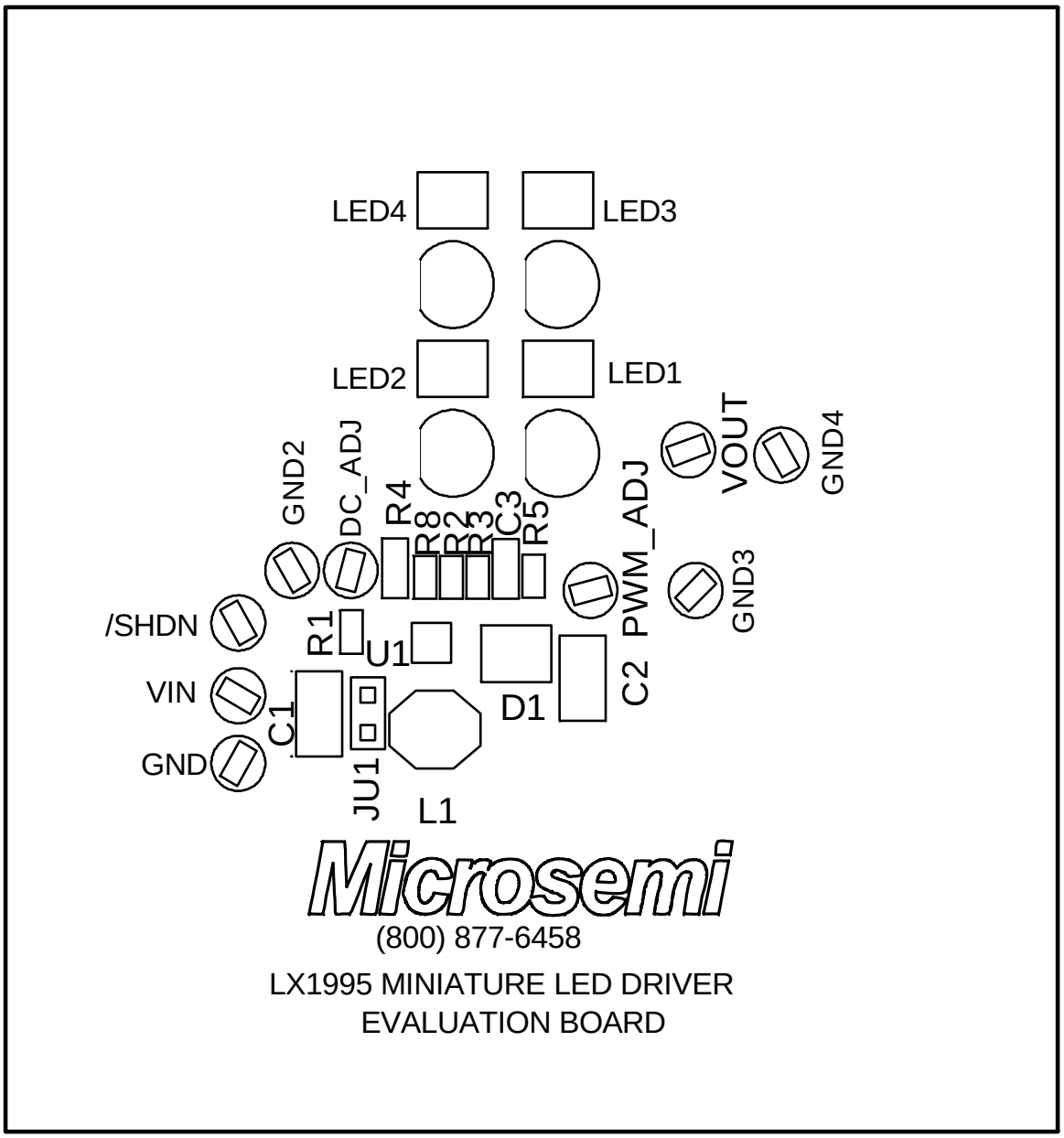

Figure 3 – LX1995 Evaluation Board

BILL OF MATERIALS

MISCELLANEOUS COMPONENTS						
Line Item	**Part Description**	**Manufacturer & Part #**		**Case**	**Reference Designators**	**Qty**
1	Miniature LED Driver	MICROSEMI	LX1995-*x*C*yy*		U1	1
2	LED, White	MICROSEMI	UPWLED	0603	LED#	4
3	Diode, Schottky, 20V, 1A	MICROSEMI	UPS5817	Powermite	D1	1
4	Inductor, 10µH	COILCRAFT	LPO3310-103MX		L1	1
5	Jumper					1
6	3-Pin Header, .100					1
7	Lead Attachment HW					9

x – denotes switch current
yy – denotes Package Type

CAPACITORS						
Line Item	**Part Description**	**Part Description**		**Case**	**Reference Designators**	**Qty**
1	Capacitor, 10µF, 6.3V, X5R	MURATA	GRM319R60J106ME01D	1206	C1	1
2	Capacitor, 1.0µF, 50V, X7R	MURATA	C3216X7R1H105K	1206	C2	1
3	Capacitor, 0.1µF, 50V, X7R	MURATA	GRM21BR71H104KA01L	0805	C3	1

RESISTORS						
Line Item	**Part Description**	**Part Description**		**Case**	**Reference Designators**	**Qty**
1	Resistor, 100K	PANASONIC	ERJ-3EKF1003V	0603	R1, R8	2
2	Resistor, 11.3K	PANASONIC	ERJ-3EKF1132V	0603	R2	1
3	Resistor, 90.9K	PANASONIC	ERJ-3EKF9092V	0603	R3	1
4	Resistor, 15	PANASONIC	ERJ-6ENF15R0V	0805	R4	1
5	Resistor, 9.09K	PANASONIC	ERJ-3EKF9091V	0603	R5	1

Copyright © 2004