查询LXT906供应商 捷多邦，专业PCB打样工厂，24小时加急出货

DATA SHEET

MAY 1997

Revision 2.1

LXT906

Ethernet Twisted-Pair / Coax Adapter

General Description

The LXT906 Twisted-Pair/Coax Adapter is designed to allow a cost effective Ethernet implementation in a mixed media environment. Combined with a coax transceiver such as the DP8392, the LXT906 offers a complete adapter solution.

LXT906 functions include level-shifted data pass-through from one transmission media to another, collision detection and propagation, and automatic correction of polarity reversal on the twisted pair input. It also includes LED drivers for jabber, coax receive and collision, twisted pair receive and collision, reversed polarity detect and link indication functions.

The LXT906 is an advanced CMOS device and requires only a single 5 volt power supply.

Applications

- 10BASE-T to Coax (10BASE5 or 10BASE2) converter

Features

- Direct interface to Coax transceiver and to RJ45 connector
- Collision detection and propagation
- Internal pre-distortion generation
- Internal common mode voltage generation
- Selectable link test
- Twisted-Pair receive polarity reverse detection and correction
- LED drivers for TP and coax receive; TP and coax collision; jabber, link active and reversed polarity indicators
- Single 5 V supply, CMOS technology
- Available in 28-pin PLCC

LXT906 Block Diagram

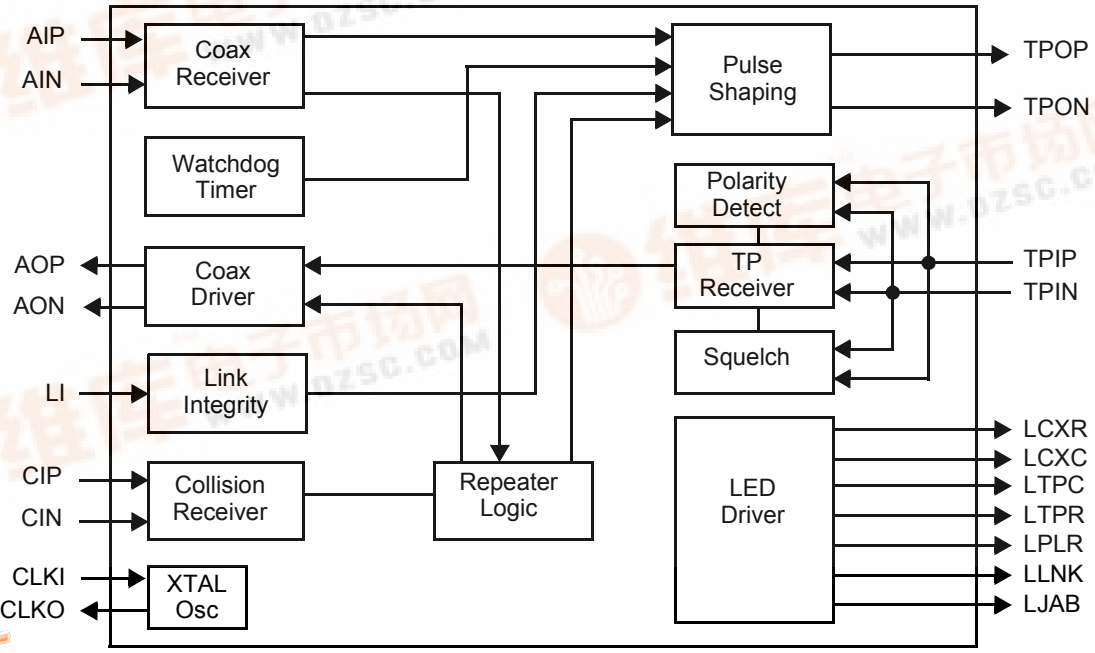

找PDF 维库一下 pdf.dzsc.com

PIN ASSIGNMENTS AND SIGNAL DESCRIPTIONS

Figure 1: LXT906 Pin Assignments

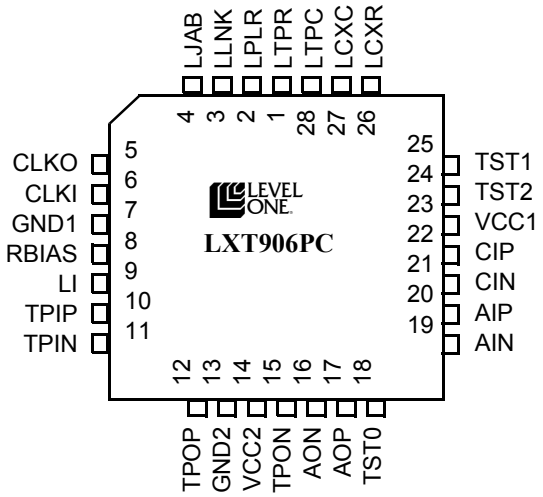

Table 1: LXT906 Signal Descriptions

Pin #	Sym	I/O	Description
1	LTPR	O	**Twisted-Pair Receive LED Driver.** Open drain driver for the TP Receive indicator LED. Output pulls Low whenever TP receiver is active.
2	LPLR	O	**Twisted-Pair Reverse Polarity LED Driver.** Open drain driver for the TP Reversed Polarity indicator LED. Output pulls Low whenever reversed polarity is detected.
3	LLNK	O	**Twisted-Pair Link LED Driver.** Open drain driver for the TP Link indicator LED. Output goes High whenever link is active.
4	LJAB	O	**Jabber LED Driver.** Open drain driver for the Jabber indicator LED. Output pulls Low whenever LXT906 is in a jabber condition.
5 6	CLKO CLKI	O I	**Crystal Oscillator.** The LXT906 requires either a 20 MHz crystal (or ceramic resonator) connected across these pins, or a 20 MHz external clock applied at CLKI with CLKO left unconnected.
7	GND1	–	**Ground 1**. Ground
8	RBIAS	I	**Resistor Bias Control.** Bias control pin for the operating circuit. Bias set from external resistor to ground. External resistor value = 12.4 kΩ (± 1%).
9	LI	I	**Link Integrity.** Enables Link Integrity testing when tied High.
10 11	TPIP TPIN	I I	**Twisted-Pair Receive Inputs.** Differential receive inputs from the twisted-pair input filter.
12 15	TPON TPOP	O O	**Twisted-Pair Transmit Outputs.** Transmit drivers to the twisted-pair output filter. Output data is Manchester encoded and pre-distorted to meet the 10BASE-T template.
13	GND2	–	**Ground 2.** Ground.
14	VCC2	–	**Power Supply 2**. +5 V power supply.

Table 1: LXT906 Signal Descriptions – continued

Pin #	Sym	I/O	Description
16 17	AON AOP	O O	**AUI Out Negative and AUI Out Positive.** Differential driver output pair connected to the Coax AUI.
18	TST0	–	**Test Pin 0.** Test pin for factory use. *This pin must be left unconnected*.
19 20	AIN AIP	I I	**AUI In Negative and AUI In Positive.** Data input pair from the Coax AUI.
21 22	CIN CIP	I I	**Collision Input Negative and Collision Input Positive.** Differential input pair tied to the collision presence pair of the Ethernet Coax transceiver.
23	VCC1	–	**Power Supply 1.** +5 V power supply.
24 25	TST2 TST1	– –	**Test Pin 2 and Test Pin 1.** Test pins reserved for factory use. *These pins must be left unconnected.*
26	LCXR	O	**Coax (AUI) Receive LED Driver.** Open drain driver for the Coax Receive indicator LED. Pulls Low whenever coax receiver is active.
27	LCXC	O	**Coax Collision LED Driver.** Open drain driver for the Coax Collision indicator LED. Pulls Low whenever a collision is detected on the coax circuit.
28	LTPC	O	**TP Collision LED Driver.** Open drain driver for the TP Collision indicator LED. Pulls Low whenever a collision is detected on the TP lines.

FUNCTIONAL DESCRIPTION

The LXT906 interfaces the coaxial transceiver (AUI) to the unshielded twisted-pair cables, allowing data transfer in both directions. The AUI side of the interface is comprised of three circuits: Data Input (AIP and AIN to the coax receiver), Data Output (AOP and AON from the coax driver), and Collision Interface (CIP and CIN to the collision receiver). The twisted-pair (TP) network side of the interface is comprised of two circuits: TP Output (TPOP and TPON from the pulse shaper) and TP Input (TPIP and TPIN to the TP receiver). In addition to these five basic circuits, the LXT906 contains crystal oscillator circuitry, various logic controls and seven LED drivers for status indications.

Coax to TP Function

The LXT906 receives data from the coax transceiver (via AIP and AIN) and re-transmits it to the twisted-pair (TP) network on the TP Output circuit. The TP Output signal (on TPON and TPOP) is pre-distorted to meet the 10BASE-T jitter template. The output waveform (after the transmit filter) is shown in Figure 2. If the differential inputs (AIP and AIN) fall below 75% of the threshold level for 8 bit times (typical), the LXT906 TP transmit function will enter the idle state. During idle periods, the LXT906 transmits link integrity test pulses on TPOP and TPON.

Figure 2: LXT906 TPO Output Waveform.

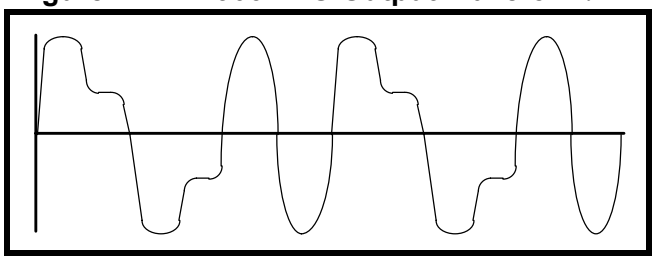

TP to Coax Function

The LXT906 receives data from the twisted-pair (TP) network on the TP Input circuit and re-transmits it to the coax transceiver on the AO circuit. An internal squelch function discriminates noise from link test pulses and valid data streams. Only valid data streams activate the TP receive function. If the differential inputs at the TP Input circuit fall below 75% of the threshold level (unsquelched) for 8 bit times (typical), the LXT906 TP receive function will enter the idle state. The Coax-to-TP data path is disabled when the TP-to-Coax path is active. The Coax-to-TP path is enabled 9 bit times after the end of TP-to-Coax transmission.

Polarity Reverse Function

The LXT906 polarity reverse function uses both link pulses and end-of-frame data to determine the polarity of the received signal. A reversed polarity condition is detected when eight link pulses of the opposite (unexpected) polarity are received without receipt of a link pulse with the expected polarity. Reversed polarity is also detected if four frames are received with a reversed start-of-idle. If the LXT906 enters the link fail state and no data or link pulses are received within 96 to 128 ms, the polarity is reset to the default (non-flipped) condition. Note that if the Link Integrity function is disabled, polarity detection is based only upon received data pulses. The LXT906 automatically corrects for reversed polarity.

Jabber Function

A Jabber condition is detected when the LXT906 has transmitted continuously for longer that 5 ms on TPOP/TPON or AOP/AON. If this occurs, the repeater state machine and output data transmission are disabled, and the Jabber LED signal (LJAB) goes Low. Transmission is re-enabled when no activity has been detected on TPIP/TPIN or AIP/AIN for 6.4 µs.

Link Integrity Test Function

Figure 3 is a state diagram of the LXT906 Link Integrity Test Function. The Link Integrity Test is used to determine the status of the twisted-pair cable. Link integrity testing is enabled when the LI pin is tied High. When enabled, the receiver recognizes link integrity pulses which are transmitted in the absence of receive traffic. If no serial data stream or link integrity pulses are detected within 50 - 150 ms, the chip enters a link-fail state and disables the transmit function and the repeater state machine. The LXT906 ignores any link integrity pulse with an interval of less than 2 - 7 ms. The LXT906 will remain in the link fail state until it detects either a serial data packet or two or more link integrity pulses.

Collision Propagation Function

A TP collision is defined as the simultaneous presence of valid signals on both the TP Input circuit and the TP Output circuit. A Coax collision is detected when a valid collision signal is present at CIP/CIN. If a collision is detected, the appropriate collision LED (TP or coax) is activated and a Jam frame is transmitted as described in Figure 4. The Jam length is always a minimum of 96 bits: 64 bits of alternating 1's and 0's, followed by an all 1's pattern.

Figure 3: LXT906 Link Integrity Test Function

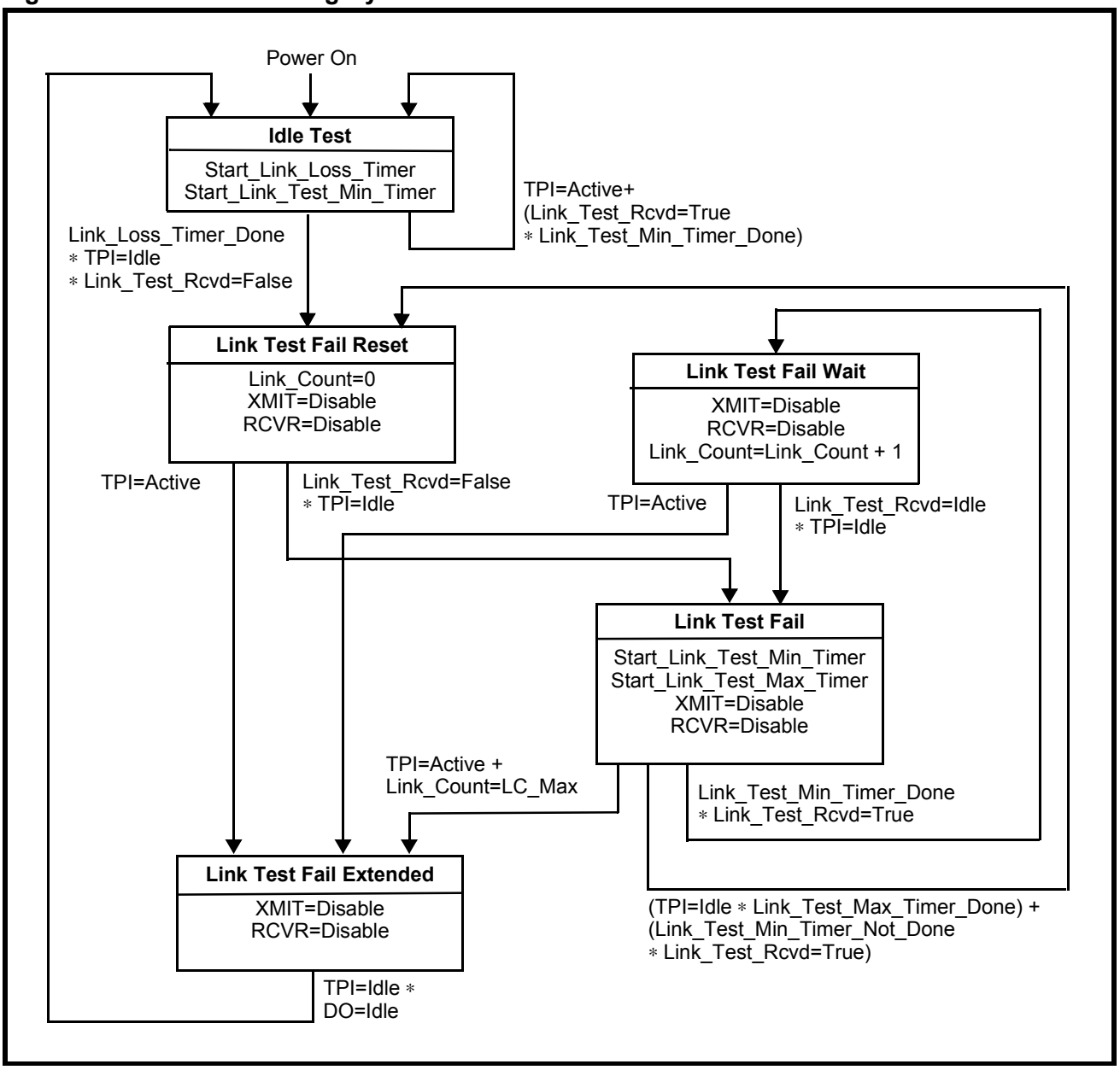

LXT906 State Diagram

The state diagram, shown in Figure 4, describes the operation of the LXT906. It is similar to a repeater state diagram, however the LXT906 does not provide re-timing, preamble regeneration or fragment extension. The LXT906 avoids fragment generation by using a minimum Jam size of 96 bits. Since the TP side does not have receive collision detection, it is not considered in this implementation.

State Diagram Variables

cXcoll = Coax collision active
TPcoll = TP collision active
cXact = Coax data active
TPact = TP data active
Tw1 = 9 bit times
Tw2 = 3 bit times
Jam = Minimum 96 bit times

Figure 4: LXT906 State Diagram

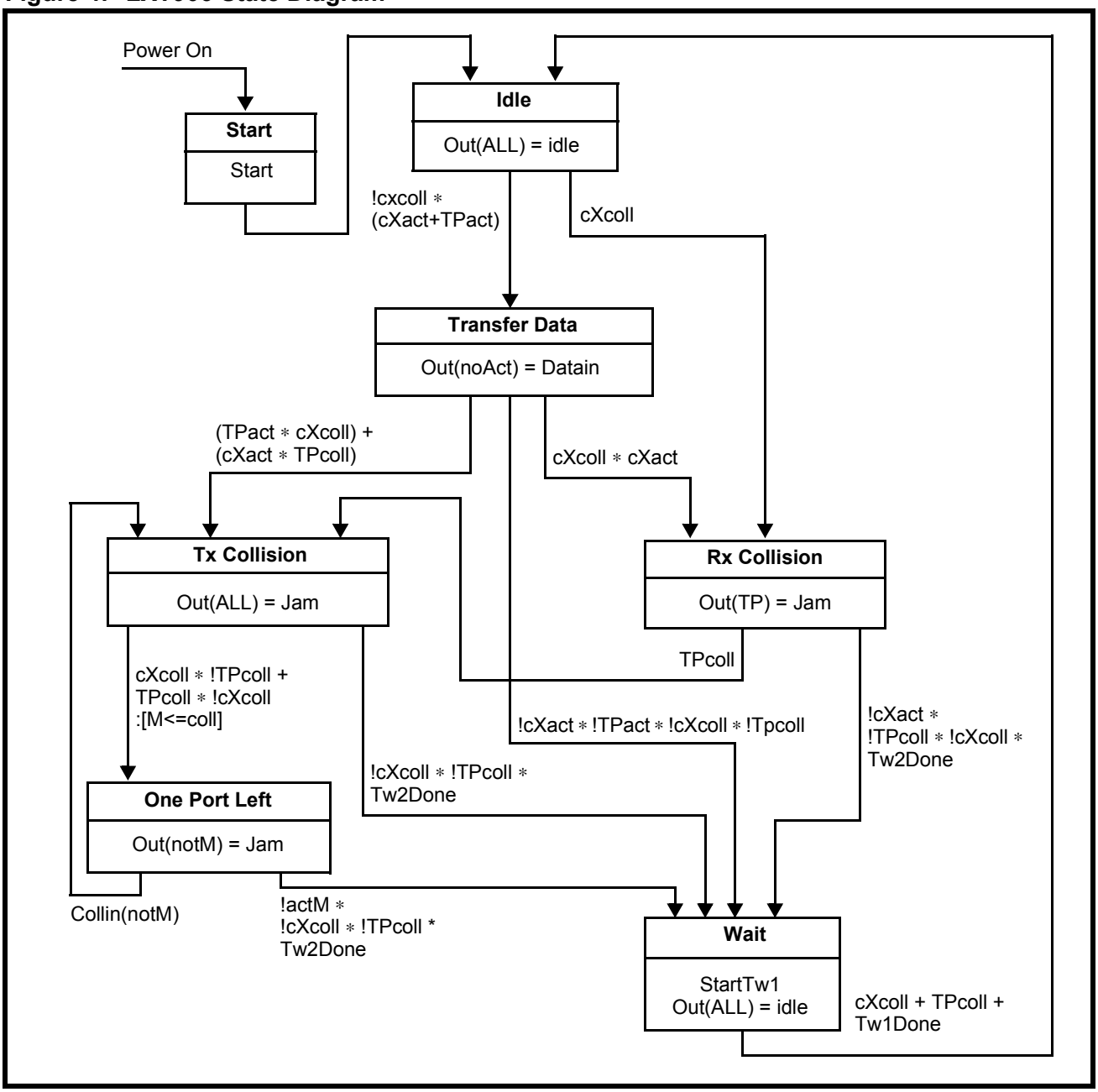

APPLICATION INFORMATION

Figure 5: Typical TP to Coax Adapter Application Circuit

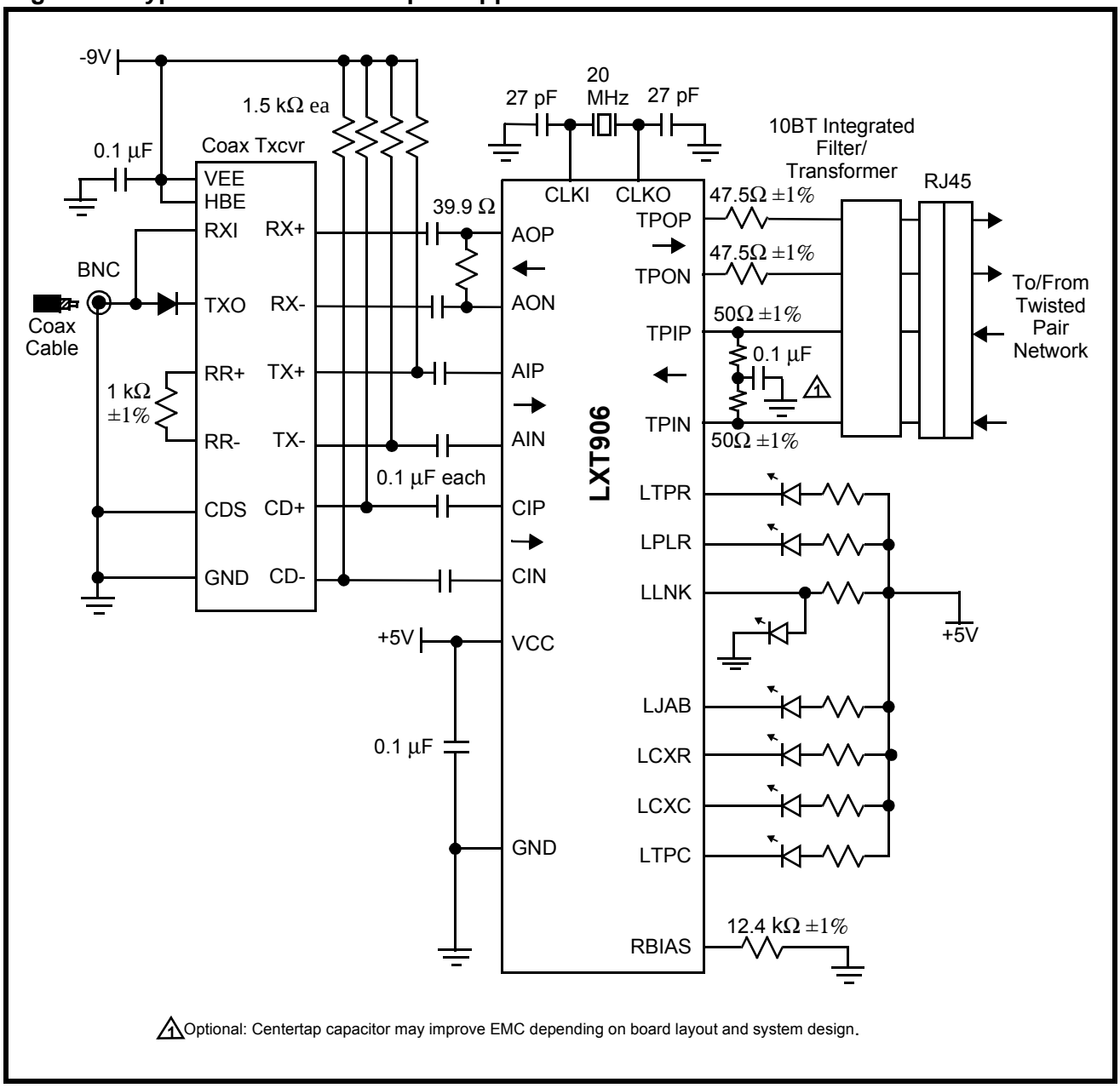

TEST SPECIFICATIONS

NOTE

The minimum and maximum values in Table 2 through 8 represent the performance specifications of the LXT906 and are guaranteed by test except, where noted, by design.

Table 2: Absolute Maximum Values

Parameter	Symbol	Min	Max	Units
Supply voltage	VCC	-0.3	6	V
Ambient operating temperature	TA	0	70	ºC
Storage temperature	TSTG	-65	+150	ºC

CAUTION

Exceeding these values may cause permanent damage. Functional operation under these conditions is not implied. Exposure to maximum rating conditions for extended periods may affect device reliability.

Table 3: Recommended Operating Conditions

Parameter	Symbol	Min	Typ	Max	Units	Test Conditions
Recommended supply voltage	VCC	4.75	5.0	5.25	V	
Recommended operating temperature	TOP	0	–	70	ºC	

Table 4: I/O Electrical Characteristics (Over Recommended Range)

Parameter	Sym	Min	Typ[1]	Max	Units	Test Conditions
Input Low voltage	VIL	–	–	0.8	V	–
Input High voltage	VIH	2.0	–	–	V	–
Output Low voltage (Open drain LED driver)	VOLL	–	–	0.7	V	IOLL = 10 mA
Supply Current (Vcc1=Vcc2=5.25 V)	ICC	–	60	80	mA	Line Idle
		–	125	150	mA	Line Active, transmitting all ones
Input Leakage Current[2]	ILL	–	±1	50	µA	Input between Vcc and GND

1. Typical values are at 25 °C and are for design aid only; not guaranteed and not subject to production testing.
2. Not including TPIN, TPIP, AIP, AIN, CIP, or CIN.

Table 5: AUI Electrical Characteristics (Over Recommended Range)

Parameter	Symbol	Min	Typ[1]	Max	Units	Test Conditions
Input Low current	I_{IL}	–	–	-700	µA	–
Input High current	I_{IH}	–	–	500	µA	–
Differential output voltage	V_{OD}	±550	–	±1200	mV	–
Differential squelch threshold	V_{DS}	–	220	–	mV	–
Receive input impedance	R_Z	–	20	–	kΩ	Between AIP and AIN, and between CIP and CIN.

1. Typical values are at 25 °C and are for design aid only; not guaranteed and not subject to production testing.

Table 6: Switching Characteristics (Over Recommended Range)

Parameter		Min	Typ[1]	Max	Units
Jam Timing	Transmit time	96	–	–	bit
Link Integrity Timing	Time link loss [2]	65	–	66	ms
	Time between Link Integrity Pulses [2]	9	–	11	ms
	Interval for valid receive Link Integrity Pulses [2]	3.9	–	65	ms
Collision Timing	End of collision to end of jam	–	–	1200	ns
Jabber Timing	Maximum transmit time	–	–	5.1	ms
	Unjab time	–	6.4	–	µs
LED Timing	LED on time	100	–	–	ms
General Timing	Transmit recovery time	–	–	12	bit
	Carrier recovery time	–	–	3	bit
	TP receive to AUI transmit	0	–	500	ns
	AUI receive to TP transmit	0	–	200	ns

1. Typical values are at 25 °C and are for design aid only; not guaranteed and not subject to production testing.
2. Switching times reduced by a factor of 1024 during Test mode.

Table 7: Twisted-Pair Transmit Characteristics (Over Recommended Range)

Parameter	Sym	Minimum	Typical[1]	Maximum	Units	Test Conditions
Transmit output impedance	Z_{OUT}	–	5	–	Ω	–
Transmit timing jitter addition[2]	–	–	–	±8	ns	After Tx filter, 0 line length

1. Typical values are at 25° C and are for design aid only; not guaranteed and not subject to production testing.
2. Parameter is guaranteed by design; not subject to production testing.

Table 8: Twisted-Pair Receive Characteristics (Over Recommended Range)

Parameter	Sym	Minimum	Typical[1]	Maximum	Units	Test Conditions
Receive input impedance	Z_{IN}	–	20	–	kΩ	Between TPIP/TPIN
Differential squelch threshold	V_{DS}	–	420	–	mV	–
Receive timing jitter addition[2]	–	–		1.5	ns	–

1. Typical values are at 25° C and are for design aid only; not guaranteed and not subject to production testing.
2. Parameter is guaranteed by design; not subject to production testing.