查询M57788SH供应商 捷多邦，专业PCB打样工厂，24小时加急出货

MITSUBISHI RF POWER MODULE

M57788SH

490-512MHz, 12.5V, 40W, FM MOBILE RADIO

OUTLINE DRAWING

Dimensions in mm

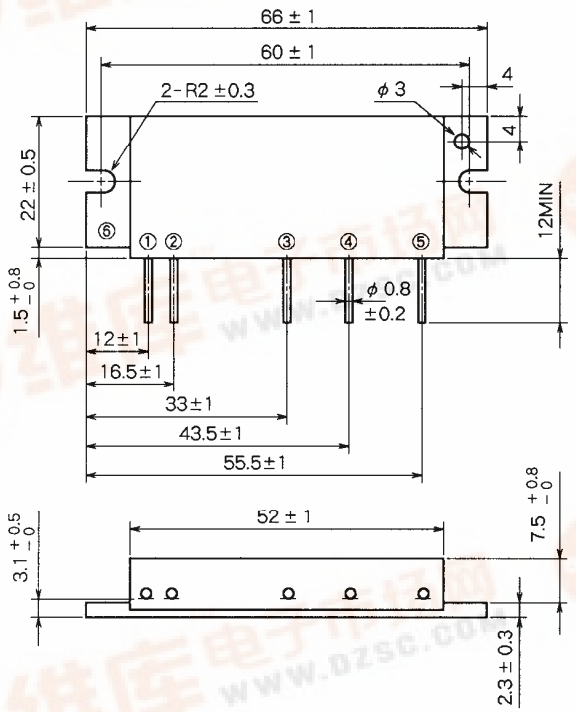

H3

BLOCK DIAGRAM

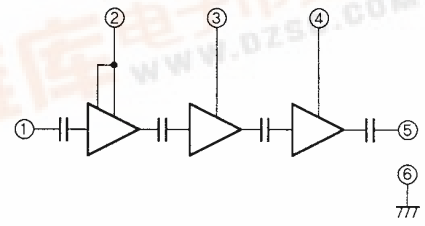

PIN :
① Pin : RF INPUT
② Vcc1 : 1st. DC SUPPLY
③ Vcc2 : 2nd. DC SUPPLY
④ Vcc3 : 3rd. DC SUPPLY
⑤ Po : RF OUTPUT
⑥ GND : FIN

ABSOLUTE MAXIMUM RATINGS (Tc = 25℃ unless otherwise noted)

Symbol	Parameter	Conditions	Ratings	Unit
Vcc1	Supply voltage		16	V
Vcc2, 3			17	V
Icc	Total current		12	A
Pin(max)	Input power	ZG = ZL = 50 Ω	0.5	W
Po(max)	Output power	ZG = ZL = 50 Ω	50	W
Tc(OP)	Operation case temperature		− 30 to 110	℃
Tstg	Storage temperature		− 40 to 110	℃

Note. Above parameters are guaranteed independently.

ELECTRICAL CHARACTERISTICS (Tc = 25℃ unless otherwise noted)

Symbol	Parameter	Test conditions	Limits Min	Limits Max	Unit
f	Frequency range	Pin = 0.3W Vcc = 12.5V ZG = ZL = 50 Ω	490	512	MHz
Po	Output power		40		W
ηT	Total efficiency		40		%
2fo	2nd. harmonic			− 30	dBc
3fo	3rd. harmonic			− 30	dBc
ρin	Input VSWR			3.5	−
−	Load VSWR tolerance	Vcc = 15.2V, Po = 40W (Pin : controlled) Load VSWR = 8.8 : 1 (All phase), ZG = 50 Ω	No degradation or destroy		−

Note. Above parameters, ratings, limits and conditions are subject to change.

找PDF 维库一下 pdf.dzsc.com