查询MB15E03L供应商 捷多邦，专业PCB打样工厂，24小时加急出货

FUJITSU SEMICONDUCTOR
DATA SHEET

DS04-21352-1E

ASSP

Single Serial Input PLL Frequency Synthesizer

On-Chip 1.2 GHz Prescaler

MB15E03L

PRELIMINARY

■ DESCRIPTION

The Fujitsu MB15E03L is serial input Phase Locked Loop (PLL) frequency synthesizer with a 1.2 GHz prescaler. A 64/65 or a 128/129 can be selected for the prescaler that enables pulse swallow operation.

The latest BiCMOS process technology is used, resultantly a supply current is limited as low as 2.5 mA typ. This operates with a supply voltage of 3.0 V (typ.)

Furthermore, a super charger circuit is included to get a fast tuning as well as low noise performance. As a result of this, MB15E03L is ideally suitable for digital mobile communications, such as GSM(Global System for Mobile Communications), PDC(800MHz)(Personal Digital Cellular).

■ FEATURES

- High frequency operation: 1.2 GHz max
- Low power supply voltage: V_{CC} = 2.7 to 3.6 V
- Very Low power supply current : I_{CC} = 2.5 mA typ. (V_{CC} = 3 V)
- Power saving function : I_{PS} = 0.1 µA typ.
- Pulse swallow function: 64/65 or 128/129
- Serial input 14-bit programmable reference divider: R = 5 to 16,383
- Serial input 18-bit programmable divider consisting of:
  - Binary 7-bit swallow counter: 0 to 127
  - Binary 11-bit programmable counter: 5 to 2,047
- Wide operating temperature: Ta = –40 to 85°C
- Plastic 16-pin SSOP package (FPT-16P-M05) and 16-pin BCC package (LCC-16P-M02)

■ PACKAGES

16-pin, Plastic SSOP

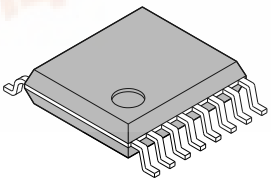

(FPT-16P-M05)

16-pin, Plastic BCC

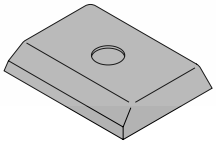

(LCC-16P-M02)

找PDF 维库一下 pdf.dzsc.com

■ PIN ASSIGNMENTS

SSOP-16 pin

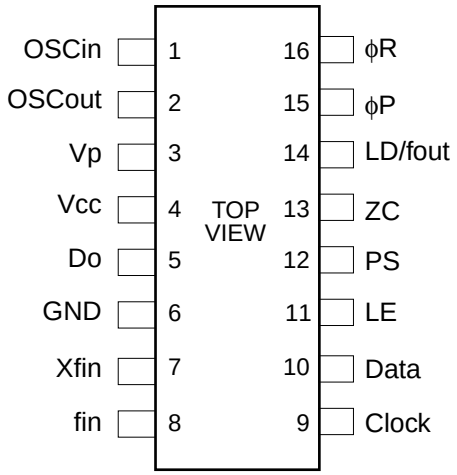

(FPT-16P-M05)

BCC-16 pin

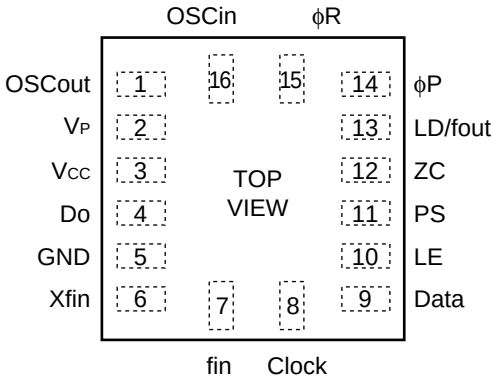

(LCC-16P-M02)

■ PIN DESCRIPTIONS

Pin no.		Pin name	I/O	Descriptions
SSOP	BCC			
1	16	OSC_{IN}	I	Programmable reference divider input. Oscillator input. Connection for an crystal or a TCXO. TCXO should be connected with a coupling capacitor.
2	1	OSC_{OUT}	O	Oscillator output. Connection for an external crystal.
3	2	V_P	–	Power supply voltage input for the charge pump.
4	3	V_{CC}	–	Power supply voltage input.
5	4	D_O	O	Charge pump output. Phase of the charge pump can be reversed by FC bit.
6	5	GND	–	Ground.
7	6	Xfin	I	Prescaler complementary input, and should be grounded via a capacitor.
8	7	fin	I	Prescaler input. Connection with an external VCO should be done with AC coupling.
9	8	Clock	I	Clock input for the 19-bit shift register. Data is shifted into the shift register on the rising edge of the clock. *(Open is prohibited.)*
10	9	Data	I	Serial data input using binary code. The last bit of the data is a control bit. *(Open is prohibited.)* Control bit = ”H” ; Data is transmitted to the programmable reference counter. Control bit = ”L” ; Data is transmitted to the programmable counter.
11	10	LE	I	Load enable signal input *(Open is prohibited.)* When LE is high, the data in the shift register is transferred to a latch, according to the control bit in the serial data.
12	11	PS	I	Power saving mode control. This pin must be set at ”L” at Power-ON. *(Open is prohibited.)* PS = ”H” ; Normal mode PS = ”L” ; Power saving mode
13	12	ZC	I	Forced high-impedance control for the charge pump (with internal pull up resistor.) ZC = ”H” ; Normal Do output. ZC = ”L” ; Do becomes high impedance.
14	13	LD/fout	O	Lock detect signal output(LD)/phase comparator monitoring output (fout). The output signal is selected by LDS bit in the serial data. LDS = ”H” ; outputs fout (fr/fp monitoring output) LDS = ”L” ; outputs LD (”H” at locking, ”L” at unlocking.)
15	14	ϕP	O	Phase comparator output for an external charge pump. Nch open drain output.
16	15	ϕR	O	Phase comparator output for an external charge pump. CMOS output.

■ BLOCK DIAGRAM

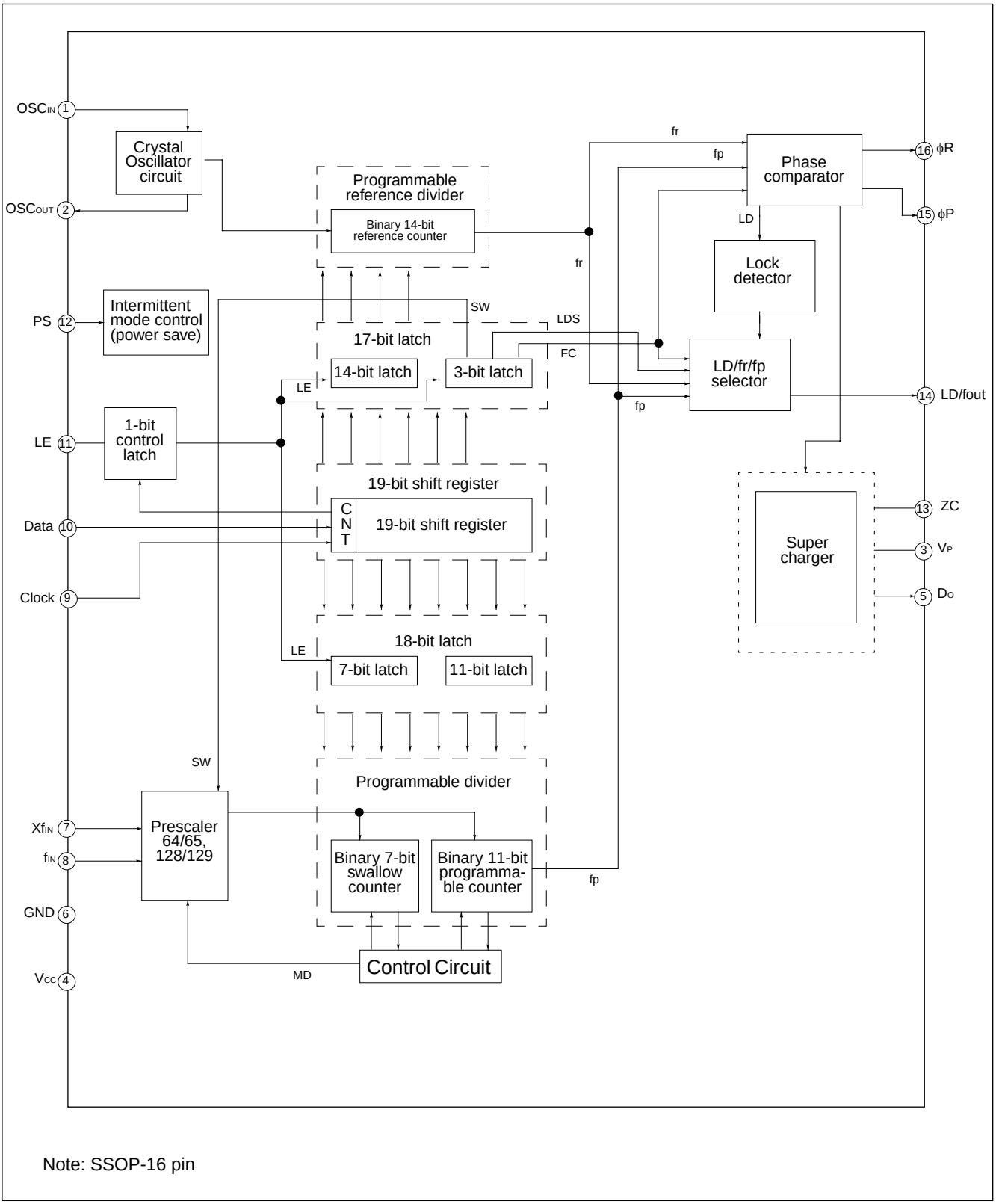

Note: SSOP-16 pin

■ ABSOLUTE MAXIMUM RATINGS

Parameter	Symbol	Rating		Unit	Remark
		Min.	Max.		
Power supply voltage	V_{CC}	–0.5	+4.0	V	
	V_P	V_{CC}	+6.0	V	
Input voltage	V_I	–0.5	V_{CC} +0.5	V	
Output voltage	V_O	–0.5	V_{CC} +0.5	V	
Output current	I_O	–10	+10	mA	Except D_O output
	I_{Od}	–25	+25	mA	D_O output
Storage temperature	T_{stg}	–55	+125	°C	

WARNING: Semiconductor devices can be permanently damaged by application of stress (voltage, current, temperature, etc.) in excess of absolute maximum ratings. Do not exceed these ratings.

■ RECOMMENDED OPERATING CONDITIONS

Parameter	Symbol	Value			Unit	Remark
		Min.	Typ.	Max.		
Power supply voltage	V_{CC}	2.7	3.0	3.6	V	
	V_P	V_{CC}	–	6.0	V	
Input voltage	V_I	GND	–	V_{CC}	V	
Operating temperature	Ta	–40	–	+85	°C	

WARNING: Recommended operating conditions are normal operating ranges for the semiconductor device. All the device's electrical characteristics are warranted when operated within these ranges.

Always yse semiconductor devices within the recommended operating conditions. Operation outside these ranges may adversely affect reliability and could result in device failure.

No warranty is made with repect to uses, operating conditions, or combinations not represented on the data sheet. Users considering application outside the listed conditions are advised to contact their FUJITSU representative beforehand.

Handling Precautions

- This device should be transported and stored in anti-static containers.
- This is a static-sensitive device; take proper anti-ESD precautions. Ensure that personnel and equipment are properly grounded. Cover workerbenches with grounded conductive mats.
- Always turn the power supply off before inserting or removing the device from its socket.
- Protect leads with a conductive sheet when handling or transporting PC boards with devices.

■ ELECTRICAL CHARACTERISTICS

(V_{CC} = 2.7 to 3.6 V, Ta = –40 to +85°C)

Parameter		Symbol	Condition	Value			Unit
				Min.	Typ.	Max.	
Power supply current*1		I_{CC}*1	fin = 1200 MHz, fosc = 12 MHz	–	2.5	–	mA
Power saving current		Ips*2	ZC = ”H”, PS = ”L”,	–	0.1	10	mA
Operating frequency		fin*3	—	100	–	1200	MHz
Crystal oscillator operating frequency		f_{OSC}	—	3	–	40	MHz
Input sensitivity	fin*3	Vfin	50 Ω system (Refer to the test circuit.)	–10	–	+2	dBm
	OSCin*3	V_{OSC}	—	0.5	–	V_{CC}	Vp-p
Input voltage	Data, Clock, LE, PS, ZC	V_{IH}	—	Vcc × 0.7	–	–	V
		V_{IL}	—	–	–	Vcc × 0.3	
Input current	Data, Clock, LE, PS	I_{IH}*4	—	–1.0	–	+1.0	µA
		I_{IL}*4	—	–1.0	–	+1.0	
	ZC	I_{IH}*4	—	–1.0	–	+1.0	µA
		I_{IL}*4	Pull up input	–100	–	0	
	OSCin	I_{IH}	—	0	–	+100	µA
		I_{IL}*4	—	–100	–	0	
Output voltage	ϕP	V_{OL}	Open drain output	–	–	0.4	V
	ϕR, LD/fout	V_{OH}	Vcc = 3V, I_{OH} = –1mA	Vcc – 0.4	–	–	V
		V_{OL}	Vcc = 3V, I_{OL} = 1mA	–	–	0.4	
	Do	V_{DOH}	Vcc = 3V, I_{DOH} = –1mA	Vp – 0.4	–	–	V
		V_{DOL}	Vcc = 3V, I_{DOL} =1 mA	–	–	0.4	
High impedance cutoff current	Do	I_{OFF}	Vcc = 3V, V_P = 6V V_{OOP} = GND to 6V	–	–	3.0	nA
Output current	ϕP	I_{OL}	Open drain output	1.0	–	–	mA
	ϕR, LD/fout	I_{OH}*4	—	–1.0	–	–	mA
		I_{OL}	—	–	–	1.0	
	Do*5	I_{DOH}*4	V_{CC} = Vp = 3 V, V_{DOH} = 2.0 V	–11	–	–6	mA
		I_{DOL}*4	V_{CC} = Vp = 3 V, V_{DOL} = 1.0 V	8	–	15	

*1: Conditions; V_{CC} = 3.0 V, Ta = 25°C, in locking state.
*2: Vcc = 3.0V, fosc=12.8MHz, Ta = 25°C in power saving mode
*3: AC coupling with a 1000pF capacitor connected.
*4: The symbol "–"(minus) means direction of current flow.
*5: Ta = +25°C

■ FUNCTION DESCRIPTIONS

1. Pulse Swallow Function

The divide ratio can be calculated using the following equation:

$f_{VCO} = [(M \times N) + A] \times f_{OSC} \div R \quad (A < N)$

- f_{VCO} : Output frequency of external voltage controlled oscillator (VCO)
- N : Preset divide ratio of binary 11-bit programmable counter (5 to 2,047)
- A : Preset divide ratio of binary 7-bit swallow counter ($0 \le A \le 127$)
- f_{OSC} : Output frequency of the reference frequency oscillator
- R : Preset divide ratio of binary 14-bit programmable reference counter (5 to 16,383)
- M : Preset divide ratio of modules prescaler (64 or 128)

2. Serial Data Input

Serial data is processed using the Data, Clock, and LE pins. Serial data controls the programmable reference divider and the programmable divider separately.
Binary serial data is entered through the Data pin.
One bit of data is shifted into the shift register on the rising edge of the clock. When the load enable pin is high, stored data is latched according to the control bit data as follows:

Table.1 Control Bit

Control bit (CNT)	Destination of serial data
H	17 bit latch (for the programmable reference divider)
L	18 bit latch (for the programmable divider)

Shift Register Configuration

Programmable Reference Counter

(LSB) (Data Flow) → (MSB)

1	2	3	4	5	6	7	8	9	10	11	12	13	14	15	16	17	18
CNT	R1	R2	R3	R4	R5	R6	R7	R8	R9	R10	R11	R12	R13	R14	SW	FC	LDS

CNT : Control bit [Table. 1]
R1 to R14: Divide ratio setting bit for the programmable reference counter (5 to 16,383) [Table. 2]
SW : Divide ratio setting bit for the prescaler (64/65 or 128/129) [Table. 5]
FC : Phase control bit for the phase comparator [Table. 7]
LDS : LD/fout signal select bit [Table. 6]

Note: Start data input with MSB first

Programmable Reference Counter

(LSB) Data Flow → (MSB)

1	2	3	4	5	6	7	8	9	10	11	12	13	14	15	16	17	18	19
CNT	A1	A2	A3	A4	A5	A6	A7	N1	N2	N3	N4	N5	N6	N7	N8	N9	N10	N11

CNT : Control bit [Table. 1]
N1 to N11 : Divide ratio setting bits for the programmable counter (5 to 2,047) [Table. 3]
A1 to A7 : Divide ratio setting bits for the swallow counter (0 to 127) [Table. 4]

Note**:** Start data input with MSB first

Table 2. Binary 14-bit Programmable Reference Counter Data Setting

Divide ratio (R)	R 14	R 13	R 12	R 11	R 10	R 9	R 8	R 7	R 6	R 5	R 4	R 3	R 2	R 1
5	0	0	0	0	0	0	0	0	0	0	0	1	0	1
6	0	0	0	0	0	0	0	0	0	0	0	1	1	0
.	.	.	.	.	.	.	.	.	.	.	.	.	.	.
16383	1	1	1	1	1	1	1	1	1	1	1	1	1	1

Note: Divide ratio less than 5 is prohibited.

Table 3. Binary 11-bit Programmable Counter Data Setting

Divide ratio (N)	N 11	N 10	N 9	N 8	N 7	N 6	N 5	N 4	N 3	N 2	N 1
5	0	0	0	0	0	0	0	0	1	0	1
6	0	0	0	0	0	0	0	0	1	1	0
.	.	.	.	.	.	.	.	.	.	.	.
2047	1	1	1	1	1	1	1	1	1	1	1

Note: • Divide ratio less than 5 is prohibited.
• Divide ratio (N) range = 5 to 2,047

Table.4 Binary 7-bit Swallow Counter Data Setting

Divide ratio (A)	A 7	A 6	A 5	A 4	A 3	A 2	A 1
0	0	0	0	0	0	0	0
1	0	0	0	0	0	0	1
.	.	.	.	.	.	.	.
127	1	1	1	1	1	1	1

Note: • Divide ratio (A) range = 0 to 127

Table. 5 Prescaler Data Setting

SW	Prescaler Divide ratio
H	64/65
L	128/129

Table. 6 LD/fout Output Select Data Setting

LDS	LD/fout output signal
H	fout signal
L	LD signal

Relation between the FC input and phase characteristics

The FC bit changes the phase characteristics of the phase comparator. Both the internal charge pump output level (D_O) and the phase comparator output (ϕR, ϕP) are reversed according to the FC bit. Also, the monitor pin (f_{OUT}) output is controlled by the FC bit. The relationship between the FC bit and each of D_O, ϕR, and ϕP is shown below.

Table. 7 FC Bit Data Setting (LDS = ”H”)

	FC = High				FC = Low			
	Do	ϕR	ϕP	LD/fout	Do	ϕR	ϕP	LD/fout
$f_r > f_p$	H	L	L	fout = fr	L	H	Z*	fout = fr
$f_r < f_p$	L	H	Z*		H	L	L	
$f_r = f_p$	Z*	L	Z*		Z*	L	Z*	

* : High impedance

When designing a synthesizer, the FC pin setting depends on the VCO and LPF characteristics.

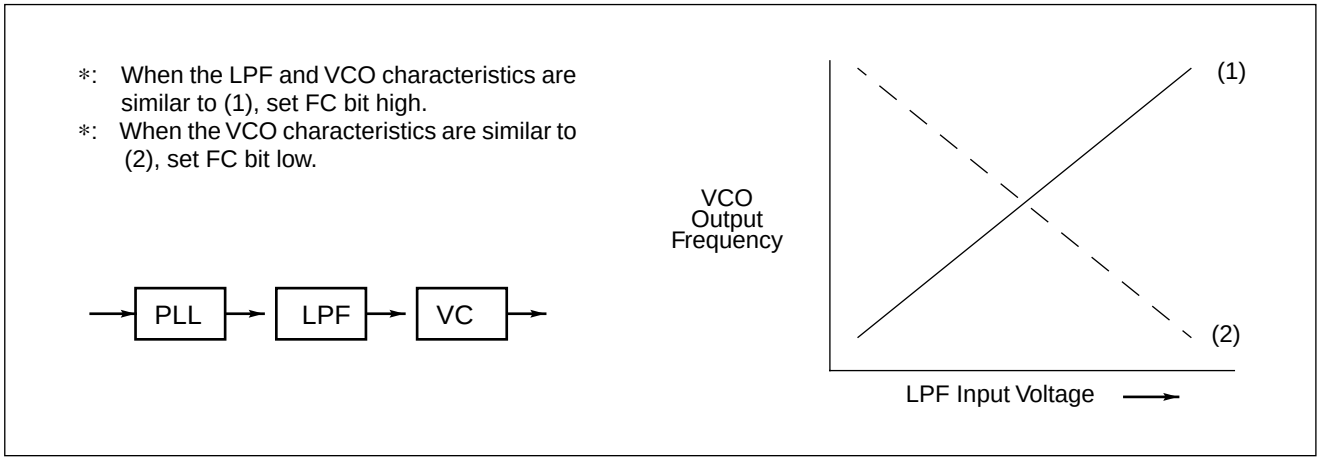

Table.8 PS Pin Setting

PS pin	Status
H	Normal mode
L	Power saving mode

Table.9 ZC Pin Setting

ZC pin	Do output
H	Normal output
L	High impedance

3. Power Saving Mode (Intermittent Mode Control Circuit)

Setting a PS pin to Low, the IC enters into power saving mode resultatly current sonsumption can be limited to 10µA (max.). Setting PS pin to High, power saving mode is released so that the IC works normally.
In addition, the intermittent operation control circuit is included which helps smooth start up from the power saving mode. In general, the power consumption can be saved by the intermittent operation that powering down or waking up the synthesizer. Such case, if the PLL is powered up uncontrolled, the resulting phase comparator output signal is unpredictable due to an undefined phase relation between reference frequency (f_r) and comparison frequency (f_p) and may in the worst case take longer time for lock up of the loop.
To prevent this, the intermittent operation control circuit enforces a limited error signal output of the phase detector during power up, thus keeping the loop locked.
During the power saving mode, the corresponding section except for indispensable circuit for the power saving function stops working, then current consumption is reduced to 10 µA (max.).
At that time, the Do and LD become the same state as when a loop is locking. That is, the Do becomes high impedance.
A VCO control voltage is naturally kept at the locking voltage which defined by a LPF"s time constant. As a result of this, VCO's frequency is kept at the locking frequency.

Note:
- *While the power saving mode is executed, ZC pin should be set at "H" or open. If ZC is set at "L" during power saving mode, approximately 10 µA current flows.*
- *PS pin must be set "L" at Power-ON.*
- *The power saving mode can be released (PS : L → H) 1µs later after power supply remains stable.*
- *During the power saving mode, it is possible to input the serial data.*

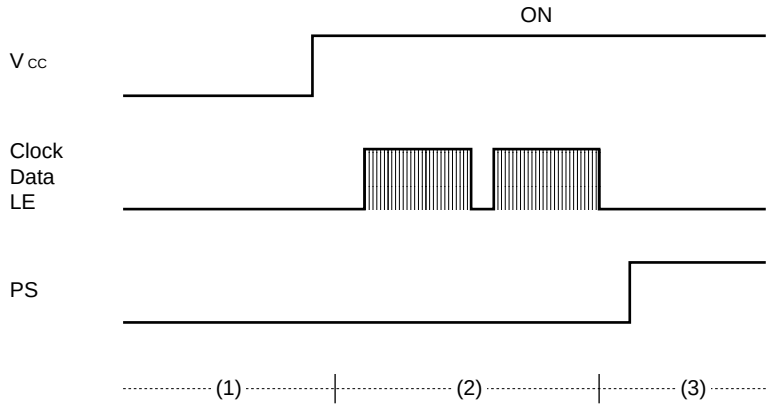

(1) PS = L (power saving mode) at Power-ON.
(2) Set serial data after power supply remains stable.
(3) Release saving mode (PS: L→H) after setting serial data.

4. Serial Data Input Timing

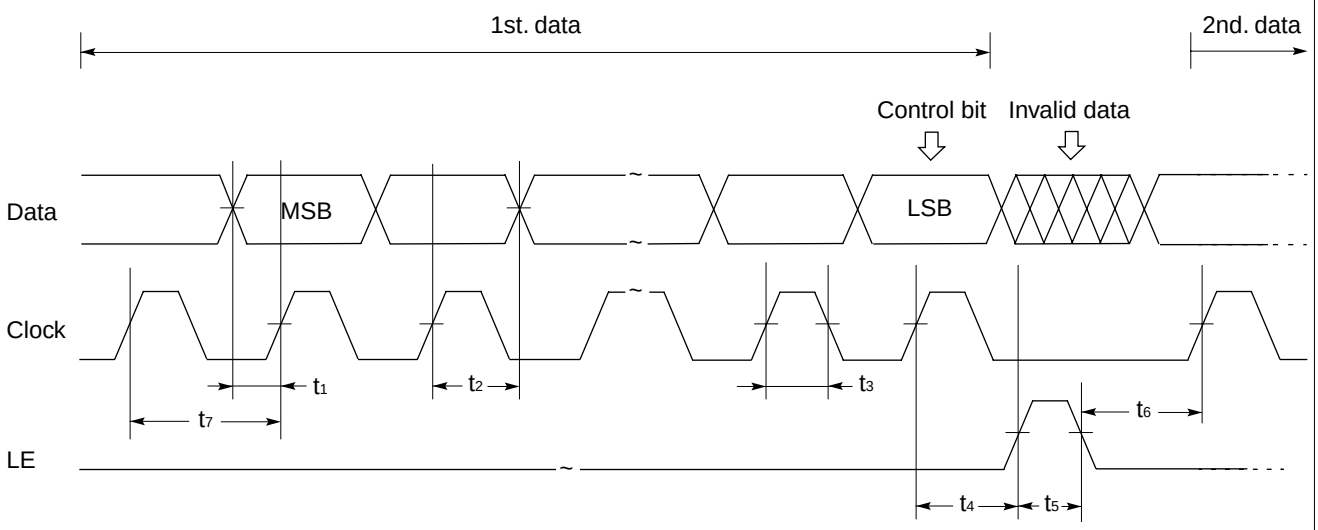

On rising edge of the clock, one bit of the data is transferred into the shift register.

Parameter	Min.	Typ.	Max.	Unit
t1	20	–	–	ns
t2	20	–	–	ns
t3	30	–	–	ns
t4	30	–	–	ns

Parameter	Min.	Typ.	Max.	Unit
t5	100	–	–	ns
t6	20	–	–	ns
t7	100	–	–	ns

PHASE COMPARATOR OUTPUT WAVEFORM

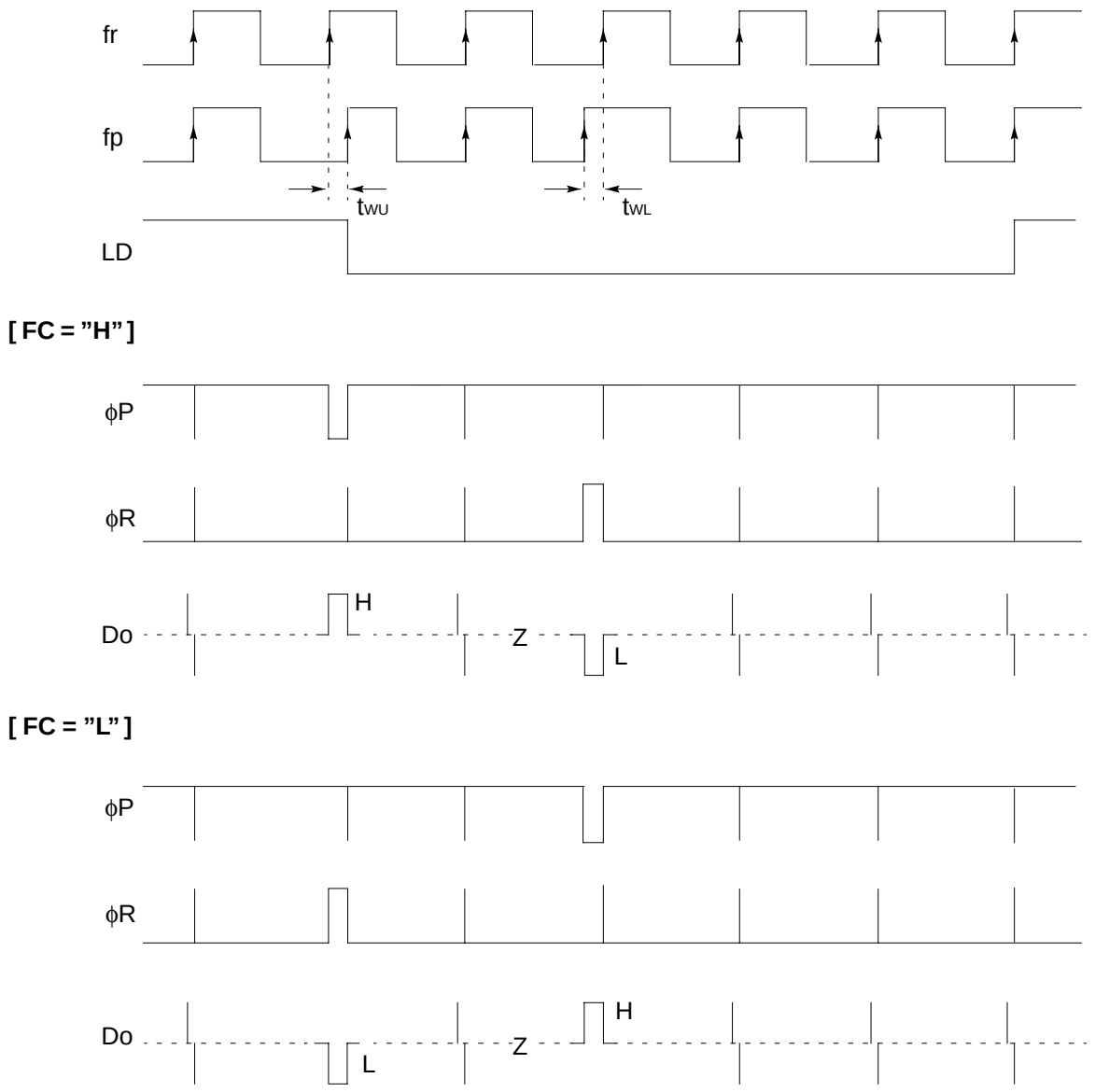

Notes:
1. Phase error detection range: –2π to +2π
2. Pulses on Do output signal during locked state are output to prevent dead zone.
3. LD output becomes low when phase is t_{WU} or more. LD output becomes high when phase error is t_{WL} or less and continues to be so for three cysles or more.
4. t_{WU} and t_{WL} depend on OSCin input frequency.
   $t_{WU} \geq 4/fosc$ (e. g. $t_{WU} \geq 312.5$ns, foscin = 12.8 MHz)
   $t_{WL} \leq 8/fosc$ (e. g. $t_{WL} \leq 625.0$ns, foscin = 12.8 MHz)
5. LD becomes high during the power saving mode (PS = ”L”.)

■ TEST CIRCUIT

For Measuring Input Sensitivity fin/OSCin

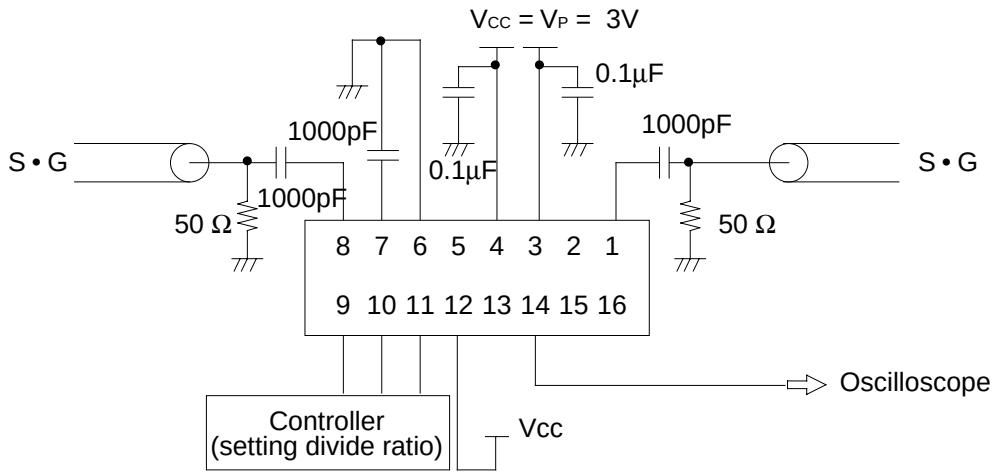

Note: SSOP-16 pin

■ TYPICAL CHARACTERISTICS

1. fin Input Sensitivity

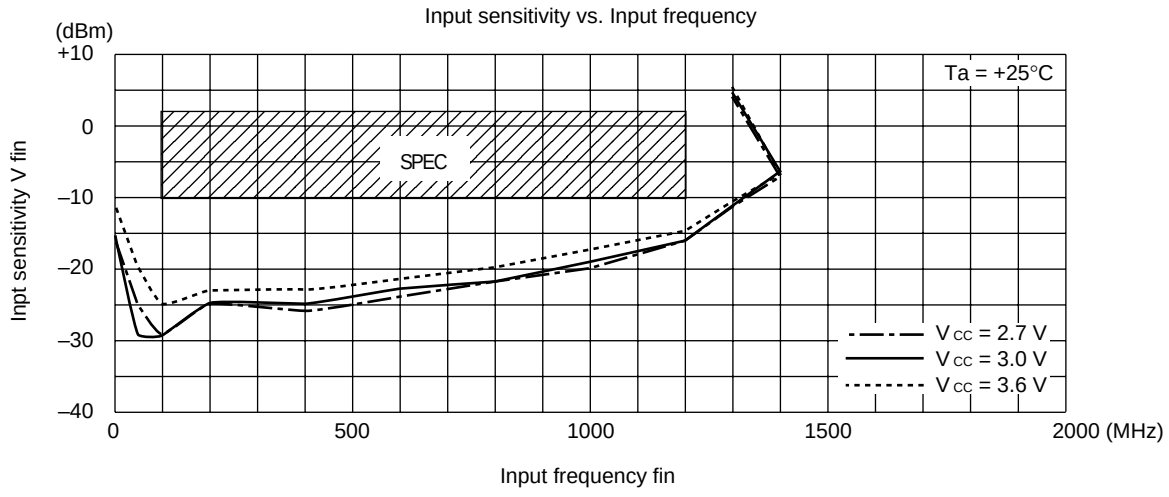

2. OSCin Input Sensitivity

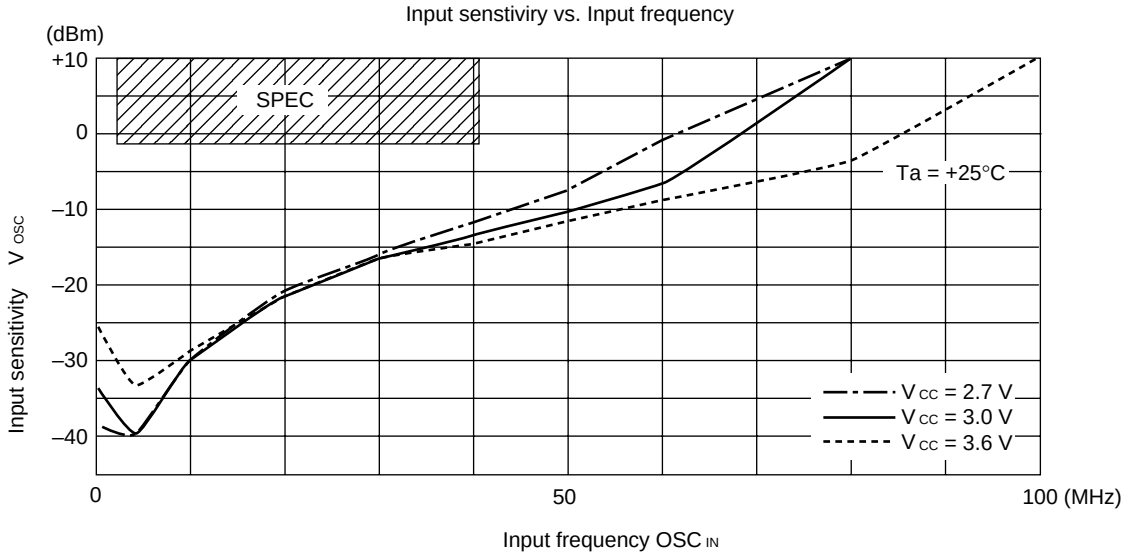

3. D_O Output Current

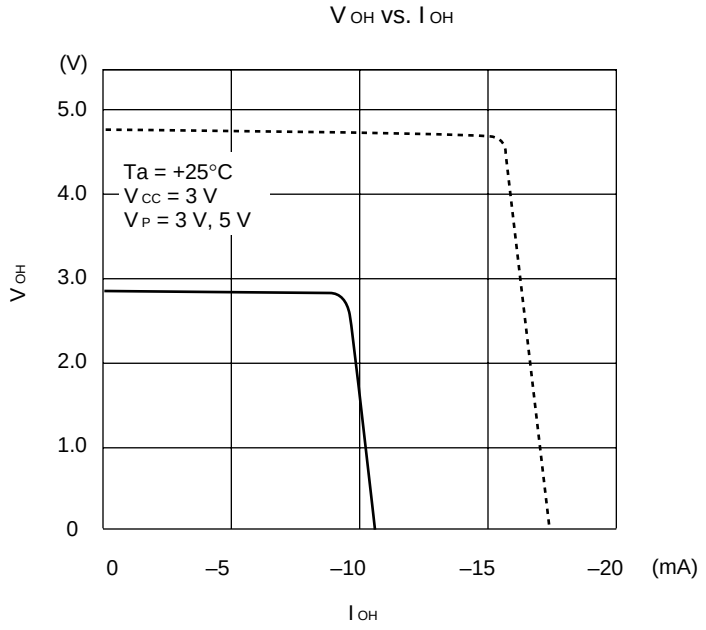

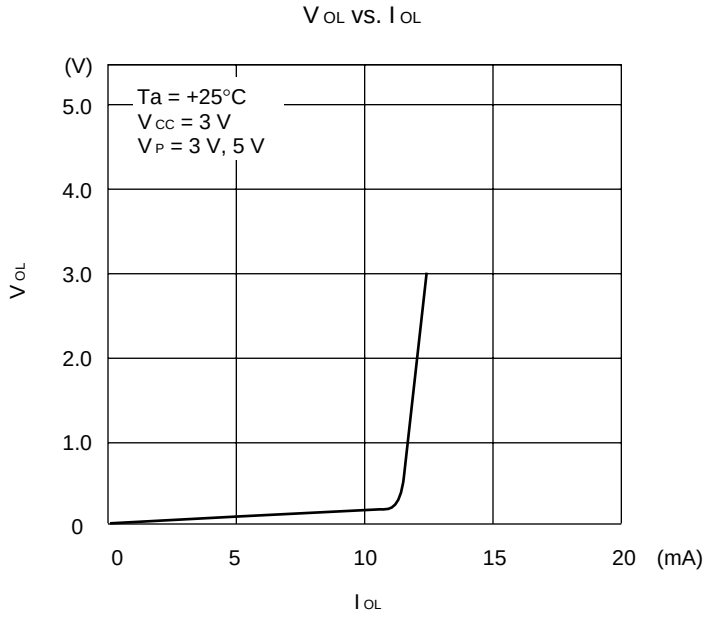

4. fin Input Impedance

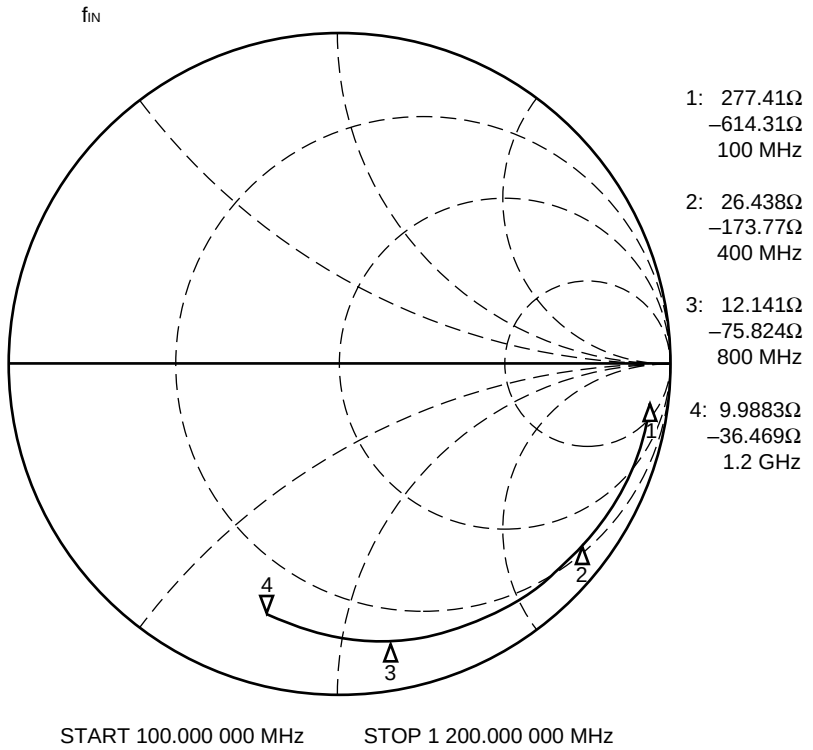

5. OSCIN Input Impedance

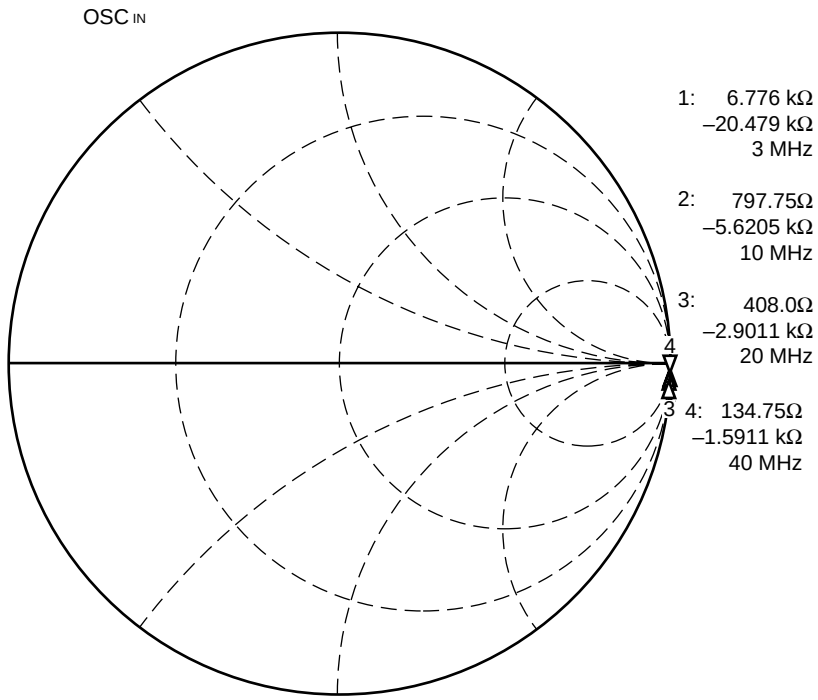

■ REFERENCE INFORMATION (lock up time, phase noise, reference leakage)

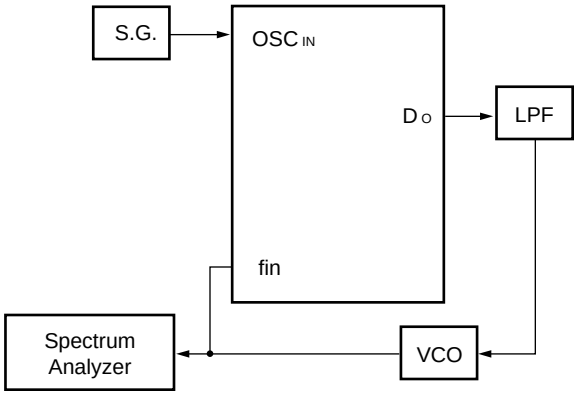

f_{VCO}=810.45 MHz
k_V=17 MHz/V
fr=25 kHz
f_{OSC}=14.4MHz

• LPF

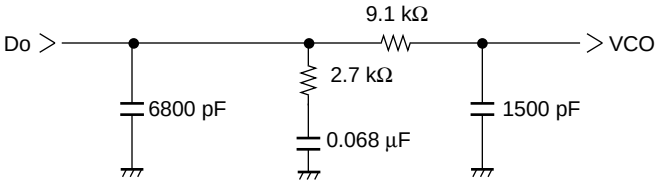

(Continued)

(Continued)

PLL lock up time = 1.6 ms
810.45MHz → 826.45 MHz ±1 kHz

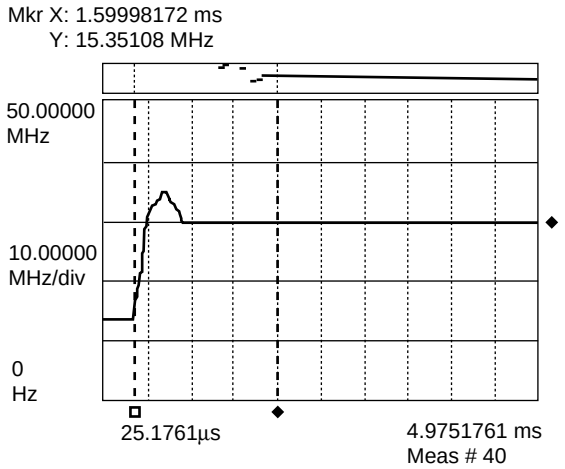

PLL lock up time = 1.6 ms
826.45MHz → 810.45 MHz ±1 kHz

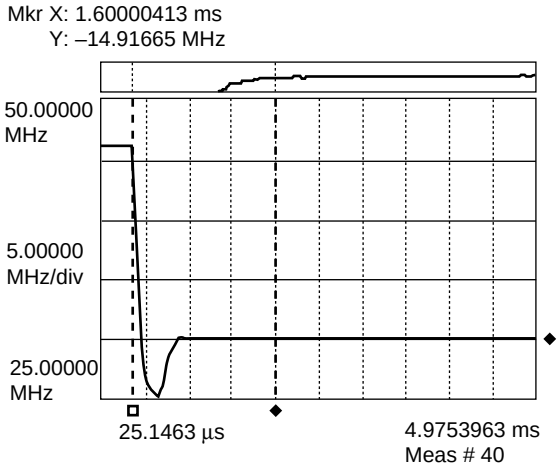

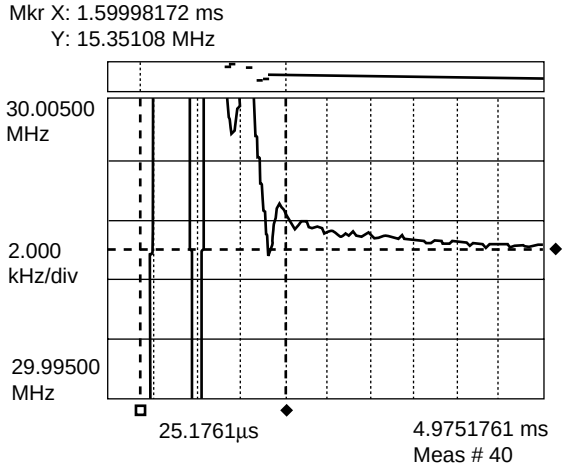

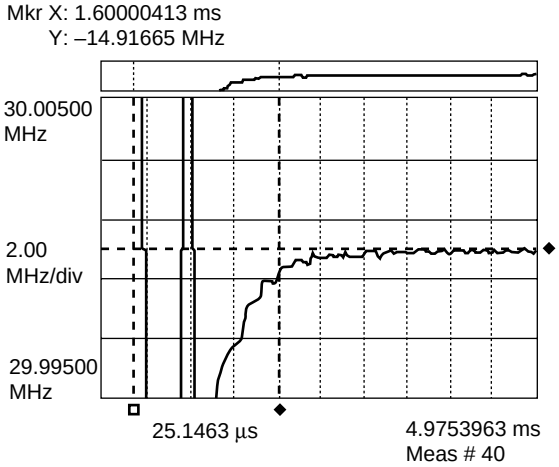

(Continued)

(Continued)

• PLL phase noise

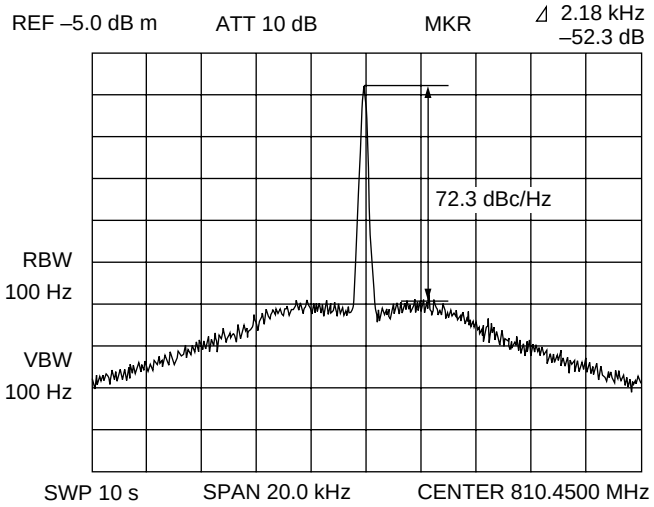

• PLL reference leakage

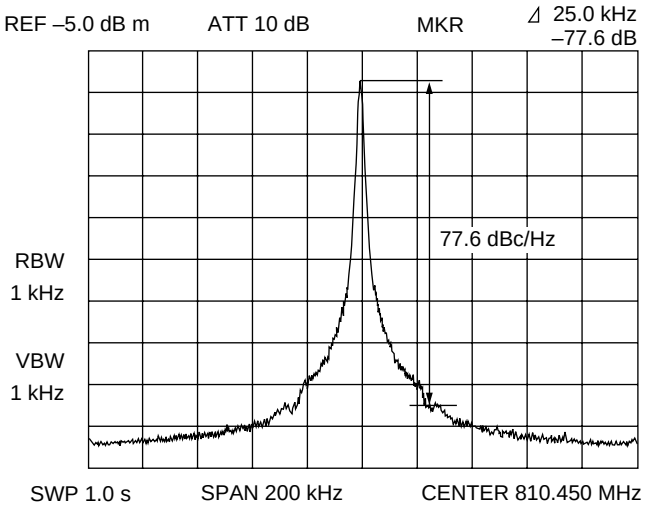

■ APPLICATION EXAMPLE

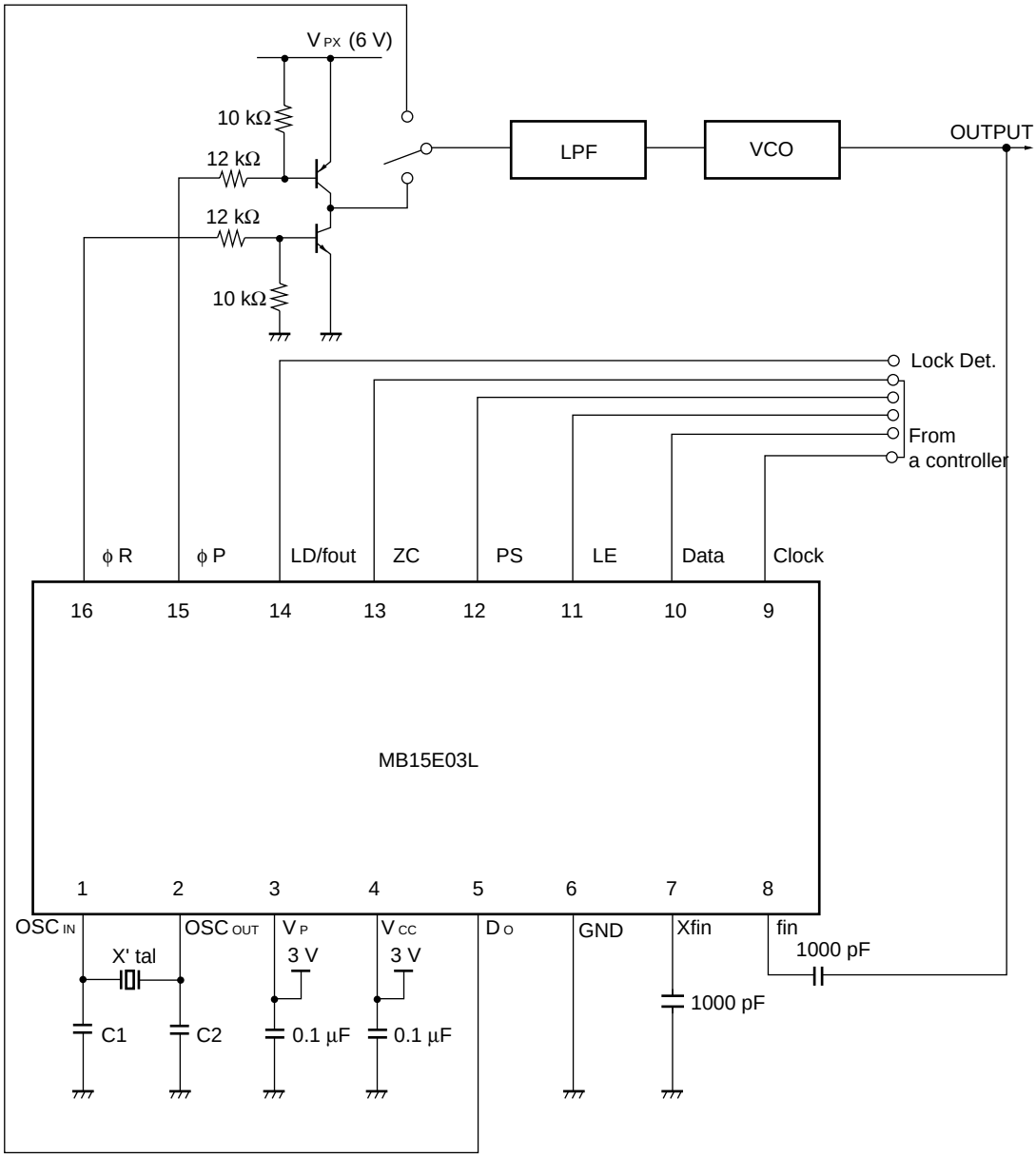

C_1, C_2: Depend on the crystal parameters
Vp: 6V Max

■ ORDERING INFORMATION

Part number	Package	Remarks
MB15E03L PFV1	16 pin, Plastic SSOP (FPT-16P-M05)	
MB15E03L PV	16 pin, Plastic BCC (LCC-16P-M02)	

■ PACKAGE DIMENSIONS

16 pins, Plastic SSOP
(FPT-16P-M05)

* : These dimensions do not include resin protrusion.

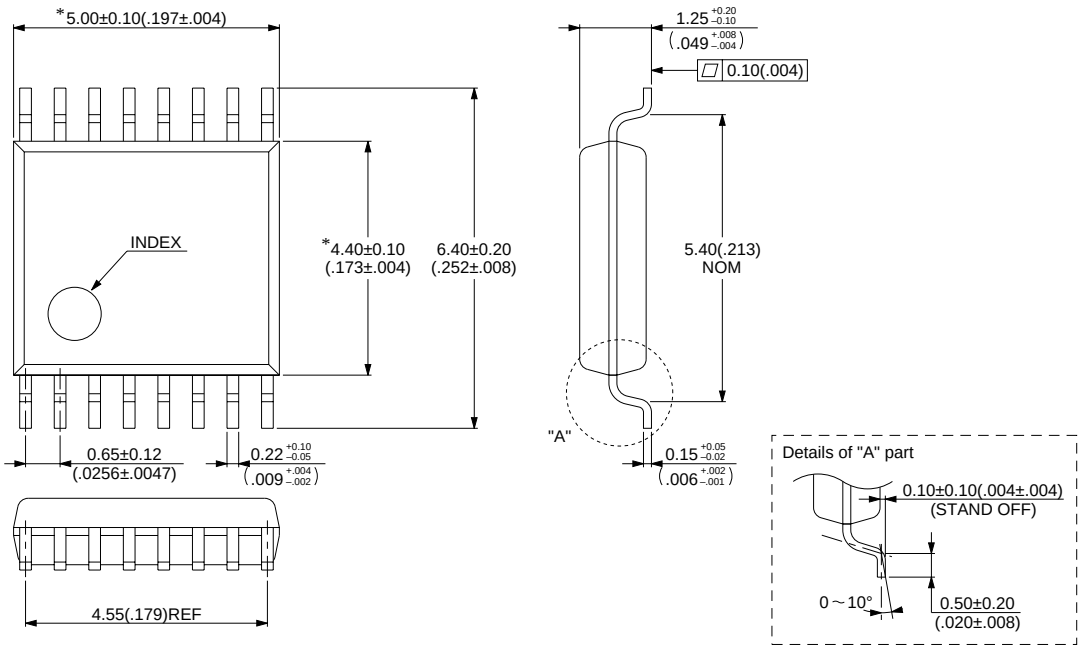

© 1994 FUJITSU LIMITED F16013S-2C-4

Dimensions in mm (inches).

(Continued)

(Continued)

16-pin, Plastic BCC
(LCC-16P-M02)

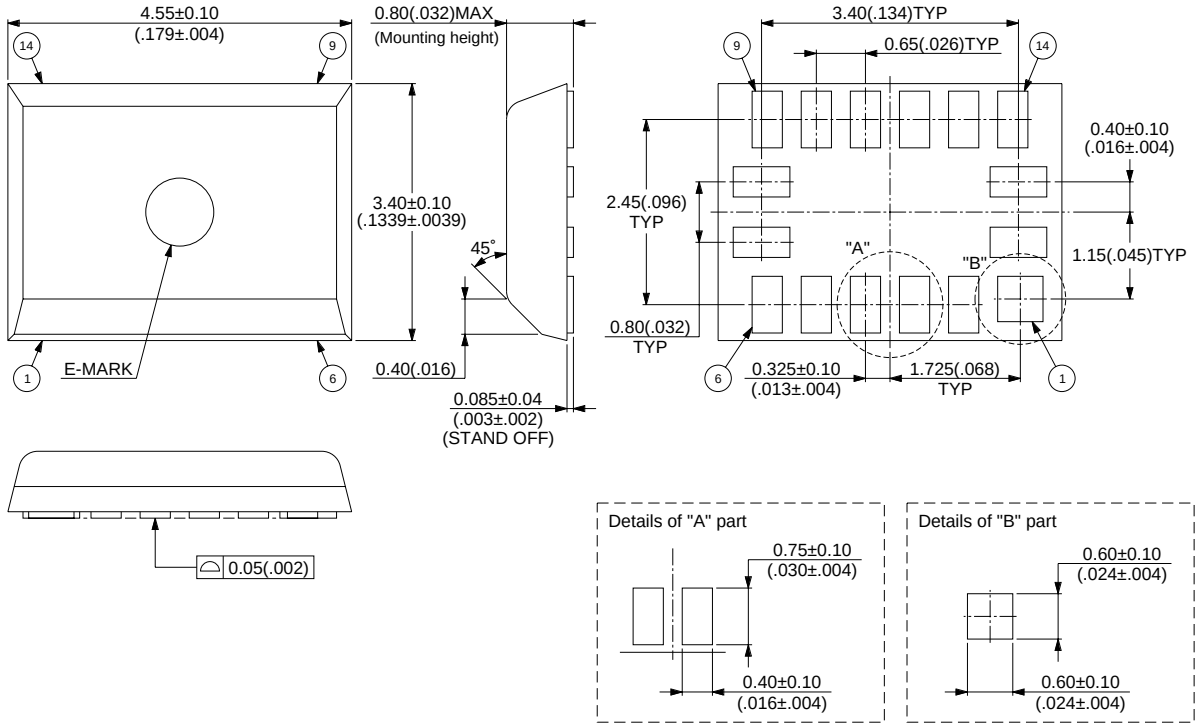

© 1996 FUJITSU LIMITED C16013S-1C-1

Dimensions in mm (inches)

FUJITSU LIMITED

For further information please contact:

Japan
FUJITSU LIMITED
Corporate Global Business Support Division
Electronic Devices
KAWASAKI PLANT, 4-1-1, Kamikodanaka
Nakahara-ku, Kawasaki-shi
Kanagawa 211-88, Japan
Tel: (044) 754-3763
Fax: (044) 754-3329

North and South America
FUJITSU MICROELECTRONICS, INC.
Semiconductor Division
3545 North First Street
San Jose, CA 95134-1804, U.S.A.
Tel: (408) 922-9000
Fax: (408) 432-9044/9045

Europe
FUJITSU MIKROELEKTRONIK GmbH
Am Siebenstein 6-10
63303 Dreieich-Buchschlag
Germany
Tel: (06103) 690-0
Fax: (06103) 690-122

Asia Pacific
FUJITSU MICROELECTRONICS ASIA PTE. LIMITED
#05-08, 151 Lorong Chuan
New Tech Park
Singapore 556741
Tel: (65) 281 0770
Fax: (65) 281 0220

F9707
© FUJITSU LIMITED Printed in Japan

All Rights Reserved.

The contents of this document are subject to change without notice. Customers are advised to consult with FUJITSU sales representatives before ordering.

The information and circuit diagrams in this document presented as examples of semiconductor device applications, and are not intended to be incorporated in devices for actual use. Also, FUJITSU is unable to assume responsibility for infringement of any patent rights or other rights of third parties arising from the use of this information or circuit diagrams.

FUJITSU semiconductor devices are intended for use in standard applications (computers, office automation and other office equipment, industrial, communications, and measurement equipment, personal or household devices, etc.).
CAUTION:
Customers considering the use of our products in special applications where failure or abnormal operation may directly affect human lives or cause physical injury or property damage, or where extremely high levels of reliability are demanded (such as aerospace systems, atomic energy controls, sea floor repeaters, vehicle operating controls, medical devices for life support, etc.) are requested to consult with FUJITSU sales representatives before such use. The company will not be responsible for damages arising from such use without prior approval.

Any semiconductor devices have inherently a certain rate of failure. You must protect against injury, damage or loss from such failures by incorporating safety design measures into your facility and equipment such as redundancy, fire protection, and prevention of over-current levels and other abnormal operating conditions.

If any products described in this document represent goods or technologies subject to certain restrictions on export under the Foreign Exchange and Foreign Trade Control Law of Japan, the prior authorization by Japanese government should be required for export of those products from Japan.