查询MB15E07SL供应商 捷多邦，专业PCB打样工厂，24小时加急出货

FUJITSU SEMICONDUCTOR
DATA SHEET

DS04-21358-3E

ASSP

Single Serial Input PLL Frequency Synthesizer On-chip 2.5 GHz Prescaler

MB15E07SL

■ DESCRIPTION

The Fujitsu MB15E07SL is a serial input Phase Locked Loop (PLL) frequency synthesizer with a 2.5 GHz prescaler. The 2.5 GHz prescaler has a dual modulus division ratio of 32/33 or 64/65 enabling pulse swallowing operation.

The supply voltage range is between 2.4 V and 3.6 V. The MB15E07SL uses the latest BiCMOS process, as a result the supply current is typically 3.5 mA at 2.7 V. A refined charge pump supplies well-balanced output currents of 1.5 mA and 6 mA. The charge pump current is selectable by serial data.

MB15E07SL is ideally suited for wireless mobile communications, such as GSM (Global System for Mobile Communications) and PCS.

■ FEATURES

- High frequency operation: 2.5 GHz max
- Low power supply voltage: V_{CC} = 2.4 to 3.6 V
- Ultra Low power supply current: I_{CC} = 3.5 mA typ. (V_{CC} = Vp = 2.7 V, Ta = +25°C, in locking state)
  I_{CC} = 4.0 mA typ. (V_{CC} = Vp = 3.0 V, Ta = +25°C, in locking state)
- Direct power saving function: Power supply current in power saving mode
  Typ. 0.1 µA (V_{CC} = Vp = 3.0 V, Ta = +25°C), Max. 10 µA (V_{CC} = Vp = 3.0 V)
- Dual modulus prescaler: 32/33 or 64/65
- Serial input 14-bit programmable reference divider: R = 3 to 16,383
- Serial input programmable divider consisting of:
  - Binary 7-bit swallow counter: 0 to 127
  - Binary 11-bit programmable counter: 3 to 2,047
- Software selectable charge pump current
- On-chip phase control for phase comparator
- Operating temperature: Ta = –40 to +85°C
- Pin compatible with MB15E07, MB15E07L

■ PACKAGES

16-pin plastic SSOP

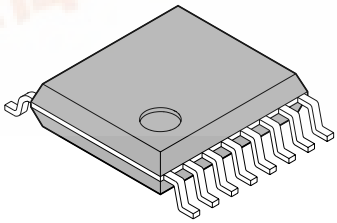

(FPT-16P-M05)

16-pad plastic BCC

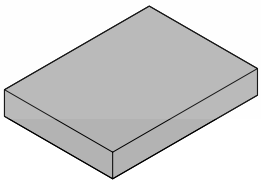

(LCC-16P-M06)

找PDF 维库一下 pdf.dzsc.com

■ PIN ASSIGNMENTS

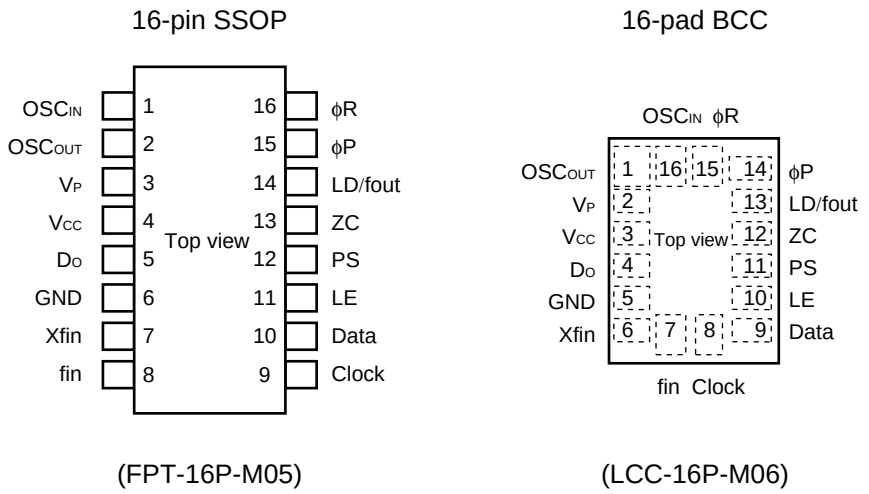

(FPT-16P-M05) (LCC-16P-M06)

■ PIN DESCRIPTIONS

Pin no.		Pin name	I/O	Descriptions
SSOP	BCC			
1	16	OSC_{IN}	I	Programmable reference divider input. Connection to a TCXO.
2	1	OSC_{OUT}	O	Oscillator output.
3	2	V_P	–	Power supply voltage input for the charge pump.
4	3	V_{CC}	–	Power supply voltage input.
5	4	D_O	O	Charge pump output. Phase of the charge pump can be selected via programming of the FC bit.
6	5	GND	–	Ground.
7	6	Xfin	I	Prescaler complementary input, which should be grounded via a capacitor.
8	7	fin	I	Prescaler input. Connection to an external VCO should be done via AC coupling.
9	8	Clock	I	Clock input for the 19-bit shift register. Data is shifted into the shift register on the rising edge of the clock. (Open is prohibited.)
10	9	Data	I	Serial data input using binary code. The last bit of the data is a control bit. (Open is prohibited.)
11	10	LE	I	Load enable signal input. (Open is prohibited.) When LE is set high, the data in the shift register is transferred to a latch according to the control bit in the serial data.
12	11	PS	I	Power saving mode control. This pin must be set at “L” at Power-ON. (Open is prohibited.) PS = “H”; Normal mode PS = “L”; Power saving mode
13	12	ZC	I	Forced high-impedance control for the charge pump (with internal pull up resistor.) ZC = “H”; Normal Do output. ZC = “L”; Do becomes high impedance.
14	13	LD/fout	O	Lock detect signal output (LD)/phase comparator monitoring output (fout). The output signal is selected via programming of the LDS bit. LDS = “H”; outputs fout (fr/fp monitoring output) LDS = “L”; outputs LD (“H” at locking, “L” at unlocking.)
15	14	ϕP	O	Phase comparator N-channel open drain output for an external charge pump. Phase can be selected via programming of the FC bit.
16	15	ϕR	O	Phase comparator CMOS output for an external charge pump. Phase can be selected via programming of the FC bit.

■ BLOCK DIAGRAM

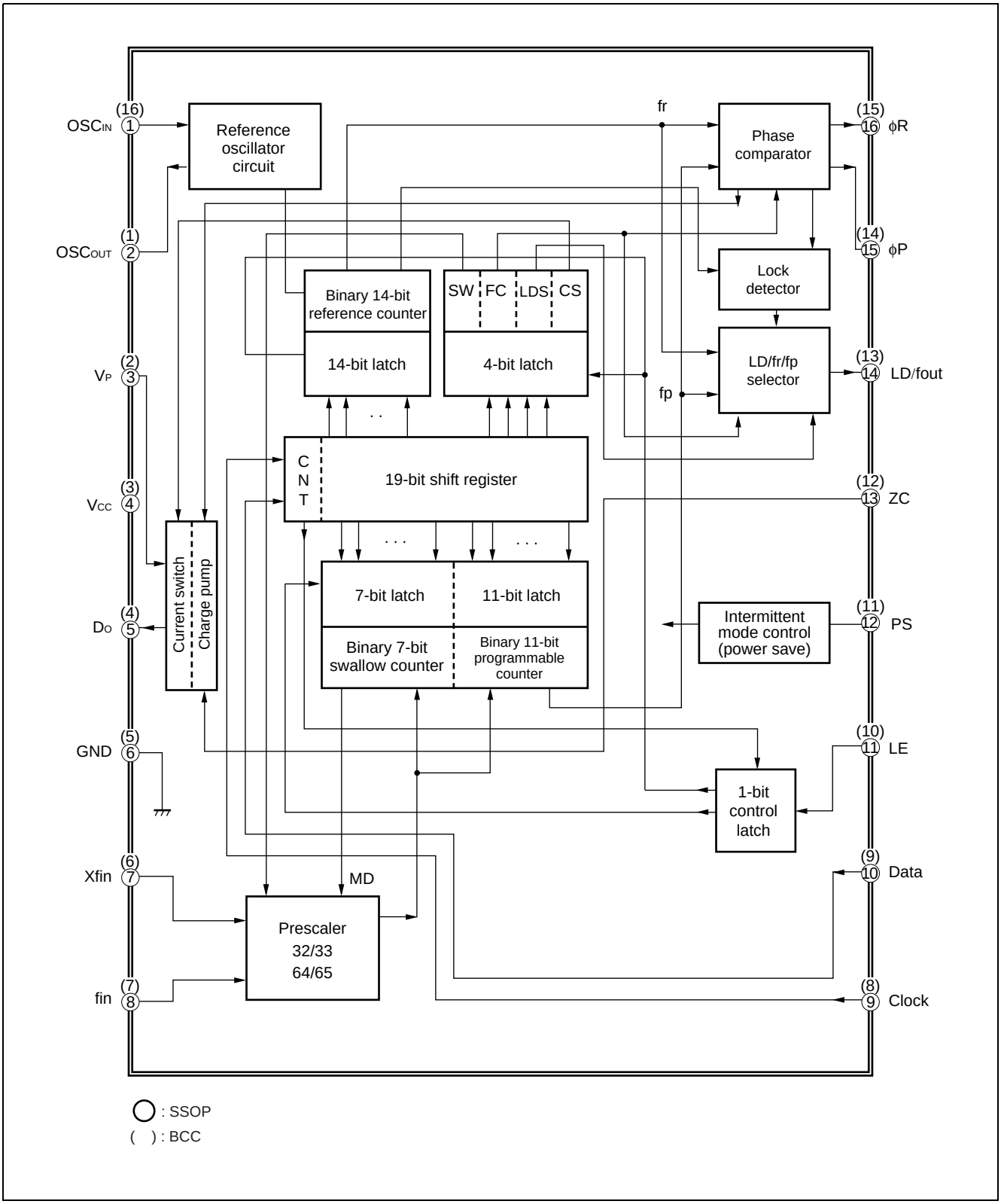

■ ABSOLUTE MAXIMUM RATINGS

Parameter	Symbol	Condition	Rating		Unit	Remark
			Min.	Max.		
Power supply voltage	V_{CC}	–	–0.5	4.0	V	
	V_P	–	V_{CC}	6.0	V	
Input voltage	V_I	–	–0.5	V_{CC} +0.5	V	
Output voltage	V_O	Except Do	GND	V_{CC}	V	
	V_O	Do	GND	V_P	V	
Storage temperature	Tstg	–	–55	+125	°C	

WARNING: Semiconductor devices can be permanently damaged by application of stress (voltage, current, temperature, etc.) in excess of absolute maximum ratings. Do not exceed these ratings.

■ RECOMMENDED OPERATING CONDITIONS

Parameter	Symbol	Value			Unit	Remark
		Min.	Typ.	Max.		
Power supply voltage	V_{CC}	2.4	3.0	3.6	V	
	V_P	V_{CC}	–	5.5	V	
Input voltage	V_I	GND	–	V_{CC}	V	
Operating temperature	Ta	–40	–	+85	°C	

WARNING: The recommended operating conditions are required in order to ensure the normal operation of the semiconductor device. All of the device's electrical characteristics are warranted when the device is operated within these ranges.

Always use semiconductor devices within their recommended operating condition ranges. Operation outside these ranges may adversely affect reliability and could result in device failure.

No warranty is made with respect to uses, operating conditions, or combinations not represented on the data sheet. Users considering application outside the listed conditions are advised to contact their FUJITSU representatives beforehand.

■ ELECTRICAL CHARACTERISTICS

(V_{CC} = 2.4 to 3.6 V, Ta = –40 to +85°C)

Parameter		Symbol	Condition		Value Min.	Value Typ.	Value Max.	Unit
Power supply current*1		I_{CC}*1	fin = 2500 MHz, V_{CC} = V_P = 2.7 V (V_{CC} = V_P = 3.0 V)		–	3.5 (4.0)	–	mA
Power saving current		I_{PS}	ZC = "H" or open		–	0.1*2	10	µA
Operating frequency	fin	f_{IN}	–		100	–	2500	MHz
	OSC_{IN}	OSC_{IN}	–		3	–	40	MHz
Input sensitivity	fin*3	Pfin	50 Ω system (Refer to the measurement circuit.)		–15	–	+2	dBm
	OSC_{IN}*3	V_{OSC}	–		0.5	–	V_{CC}	Vp-p
"H" level input voltage	Data, Clock, LE, PS, ZC	V_{IH}	–		V_{CC} × 0.7	–	–	V
"L" level input voltage		V_{IL}	–		–	–	V_{CC} × 0.3	
"H" level input current	Data, Clock, LE, PS	I_{IH}*4	–		–1.0	–	+1.0	µA
"L" level input current		I_{IL}*4	–		–1.0	–	+1.0	
"H" level input current	OSC_{IN}	I_{IH}	–		0	–	+100	µA
"L" level input current		I_{IL}*4	–		–100	–	0	
"H" level input current	ZC	I_{IH}*4	–		–1.0	–	+1.0	µA
"L" level input current		I_{IL}*4	Pull up input		–100	–	0	
"L" level output voltage	ϕP	V_{OL}	Open drain output		–	–	0.4	V
"H" level output voltage	ϕR, LD/fout	V_{OH}	V_{CC} = V_P = 3.0 V, I_{OH} = –1 mA		V_{CC} – 0.4	–	–	V
"L" level output voltage		V_{OL}	V_{CC} = V_P = 3.0 V, I_{OL} = 1 mA		–	–	0.4	
"H" level output voltage	Do	V_{DOH}	V_{CC} = V_P = 3.0 V, I_{DOH} = –0.5 mA		V_P – 0.4	–	–	V
"L" level output voltage		V_{DOL}	V_{CC} = V_P = 3.0 V, I_{DOL} = 0.5 mA		–	–	0.4	
High impedance cutoff current	Do	I_{OFF}	V_{CC} = V_P = 3.0 V, V_{OFF} = 0.5 V to V_P – 0.5 V		–	–	2.5	nA
"L" level output current	ϕP	I_{OL}	Open drain output		1.0	–	–	mA
"H" level output current	ϕR, LD/fout	I_{OH}	–		–	–	–1.0	mA
"L" level output current		I_{OL}	–		1.0	–	–	
"H" level output current	Do	I_{DOH}*4	V_{CC} = 3 V, V_P = 3 V, V_{DO} = V_P/2 Ta = +25°C	CS bit = "H"	–	–6.0	–	mA
				CS bit = "L"	–	–1.5	–	
"L" level output current		I_{DOL}		CS bit = "H"	–	6.0	–	
				CS bit = "L"	–	1.5	–	
Charge pump current rate	I_{DOL}/I_{DOH}	I_{DOMT}*5	V_{DO} = V_P/2		–	3	–	%
	vs V_{DO}	I_{DOVD}*6	0.5 V ≤ V_{DO} ≤ V_P – 0.5 V		–	10	–	%
	vs Ta	I_{DOTA}*7	– 40°C ≤ Ta ≤ +85°C		–	10	–	%

*1: Conditions; fosc = 12 MHz, Ta = +25°C, in locking state.
*2: $V_{CC} = V_P = 3.0$ V, fosc = 12.8 MHz, Ta = +25°C, in power saving mode
*3: AC coupling. 1000 pF capacitor is connected under the condition of min. operating frequency.
*4: The symbol "–" (minus) means direction of current flow.
*5: $V_{CC} = V_P = 3.0$ V, Ta = +25°C $(|I_3| - |I_4|) / [(|I_3| + |I_4|) /2] \times 100(\%)$
*6: $V_{CC} = V_P = 3.0$ V, Ta = +25°C $[(|I_2| - |I_1|) /2] / [(|I_1| + |I_2|) /2] \times 100(\%)$ (Applied to each I_{DOL}, I_{DOH})
*7: $V_{CC} = V_P = 3.0$ V, $V_{DO} = V_P/2$ $(|I_{DO(85°C)} - I_{DO(-40°C)}| /2) / (|I_{DO(85°C)} + I_{DO(-40°C)}| /2) \times 100(\%)$ (Applied to each I_{DOL}, I_{DOH})

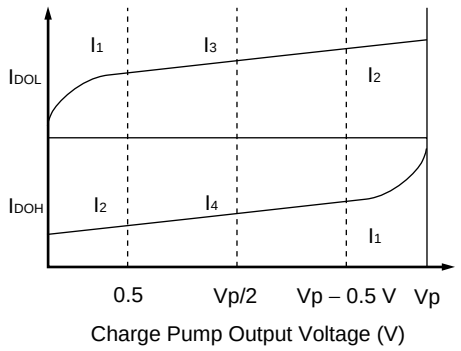

■ FUNCTIONAL DESCRIPTION

1. Pulse Swallow Function

The divide ratio can be calculated using the following equation:

$f_{VCO} = [(M \times N) + A] \times f_{OSC} \div R \quad (A < N)$

- f_{VCO} : Output frequency of external voltage controlled oscillator (VCO)
- N : Preset divide ratio of binary 11-bit programmable counter (3 to 2,047)
- A : Preset divide ratio of binary 7-bit swallow counter ($0 \le A \le 127$)
- f_{OSC} : Output frequency of the reference frequency oscillator
- R : Preset divide ratio of binary 14-bit programmable reference counter (3 to 16,383)
- M : Preset divide ratio of modulus prescaler (32 or 64)

2. Serial Data Input

Serial data is processed using the Data, Clock, and LE pins. Serial data controls the programmable reference divider and the programmable divider separately.
Binary serial data is entered through the Data pin.
One bit of data is shifted into the shift register on the rising edge of the Clock. When the LE signal pin is taken high, stored data is latched according to the control bit data as follows:

Table 1. Control Bit

Control bit (CNT)	Destination of serial data
H	For the programmable reference divider
L	For the programmable divider

(1) Shift Register Configuration

Programmable Reference Counter

LSB ↓ Data Flow → MSB ↓

1	2	3	4	5	6	7	8	9	10	11	12	13	14	15	16	17	18	19
CNT	R1	R2	R3	R4	R5	R6	R7	R8	R9	R10	R11	R12	R13	R14	SW	FC	LDS	CS

CNT	: Control bit	[Table 1]
R1 to R14	: Divide ratio setting bit for the programmable reference counter (3 to 16,383)	[Table 2]
SW	: Divide ratio setting bit for the prescaler (32/33 or 64/65)	[Table 5]
FC	: Phase control bit for the phase comparator	[Table 8]
LDS	: LD/f_{OUT} signal select bit	[Table 7]
CS	: Charge pump current select bit	[Table 6]

Note: Start data input with MSB first.

Programmable Counter

LSB ↓ Data Flow → MSB ↓

1	2	3	4	5	6	7	8	9	10	11	12	13	14	15	16	17	18	19
CNT	A1	A2	A3	A4	A5	A6	A7	N1	N2	N3	N4	N5	N6	N7	N8	N9	N10	N11

CNT : Control bit [Table 1]
N1 to N11: Divide ratio setting bits for the programmable counter (3 to 2,047) [Table 3]
A1 to A7 : Divide ratio setting bits for the swallow counter (0 to 127) [Table 4]

Note: Data input with MSB first.

Table 2. Binary 14-bit Programmable Reference Counter Data Setting

Divide ratio (R)	R 14	R 13	R 12	R 11	R 10	R 9	R 8	R 7	R 6	R 5	R 4	R 3	R 2	R 1
3	0	0	0	0	0	0	0	0	0	0	0	0	1	1
4	0	0	0	0	0	0	0	0	0	0	0	1	0	0
.	.	.	.	.	.	.	.	.	.	.	.	.	.	.
16383	1	1	1	1	1	1	1	1	1	1	1	1	1	1

Note: • Divide ratio less than 3 is prohibited.

Table 3. Binary 11-bit Programmable Counter Data Setting

Divide ratio (N)	N 11	N 10	N 9	N 8	N 7	N 6	N 5	N 4	N 3	N 2	N 1
3	0	0	0	0	0	0	0	0	0	1	1
4	0	0	0	0	0	0	0	0	1	0	0
.	.	.	.	.	.	.	.	.	.	.	.
2047	1	1	1	1	1	1	1	1	1	1	1

Note: • Divide ratio less than 3 is prohibited.

Table 4. Binary 7-bit Swallow Counter Data Setting

Divide ratio (A)	A 7	A 6	A 5	A 4	A 3	A 2	A 1
0	0	0	0	0	0	0	0
1	0	0	0	0	0	0	1
.	.	.	.	.	.	.	.
127	1	1	1	1	1	1	1

Table 5. Prescaler Data Setting

SW	Prescaler divide ratio
H	32/33
L	64/65

Table 6. Charge Pump Current Setting

CS	Current value
H	±6.0 mA
L	±1.5 mA

Table 7. LD/fout Output Select Data Setting

LDS	LD/f_{OUT} output signal
H	fout signal
L	LD signal

(2) Relation between the FC Input and Phase Characteristics

The FC bit changes the phase characteristics of the phase comparator. Both the internal charge pump output level (D_O) and the phase comparator output (ϕR, ϕP) are reversed according to the FC bit. Also, the monitor pin (f_{OUT}) output is controlled by the FC bit. The relationship between the FC bit and each of D_O, ϕR, and ϕP is shown below.

Table 8. FC Bit Data Setting (LDS = "H")

	FC = High				FC = Low			
	D_O	ϕR	ϕP	LD/fout	D_O	ϕR	ϕP	LD/fout
$fr > f_P$	H	L	L	fout = fr	L	H	Z*	fout = fp
$fr < f_P$	L	H	Z*		H	L	L	
$fr = f_P$	Z*	L	Z*		Z*	L	Z*	

* : High impedance

When designing a synthesizer, the FC pin setting depends on the VCO and LPF characteristics.

* : When the LPF and VCO characteristics are similar to (1), set FC bit high.

* : When the VCO characteristics are similar to (2), set FC bit low.

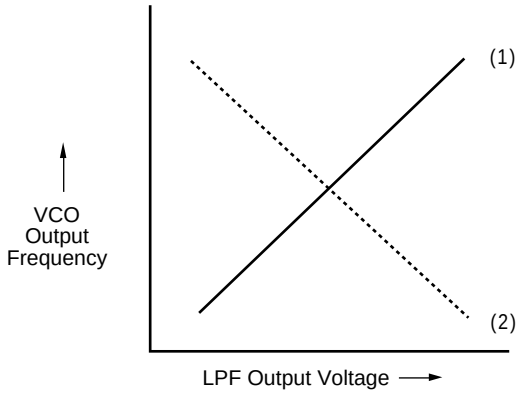

3. Do Output Control

Table 9. ZC Pin Setting

ZC pin	Do output
H	Normal output
L	High impedance

4. Power Saving Mode (Intermittent Mode Control Circuit)

Table 10. PS Pin Setting

PS pin	Status
H	Normal mode
L	Power saving mode

The intermittent mode control circuit reduces the PLL power consumption.

By setting the PS pin low, the device enters into the power saving mode, reducing the current consumption. See the Electrical Characteristics chart for the specific value.

The phase detector output, Do, becomes high impedance.

For the signal PLL, the lock detector, LD, remains high, indicating a locked condition.

Setting the PS pin high, releases the power saving mode, and the device works normally.

The intermittent mode control circuit also ensures a smooth startup when the device returns to normal operation. When the PLL is returned to normal operation, the phase comparator output signal is unpredictable. This is because of the unknown relationship between the comparison frequency (fp) and the reference frequency (fr) which can cause a major change in the comparator output, resulting in a VCO frequency jump and an increase in lockup time.

To prevent a major VCO frequency jump, the intermittent mode control circuit limits the magnitude of the error signal from the phase detector when it returns to normal operation.

Note: When power (V_{CC}) is first applied, the device must be in standby mode, PS = Low, for at least 1 µs.

Note: • PS pin must be set “L” for Power-ON.

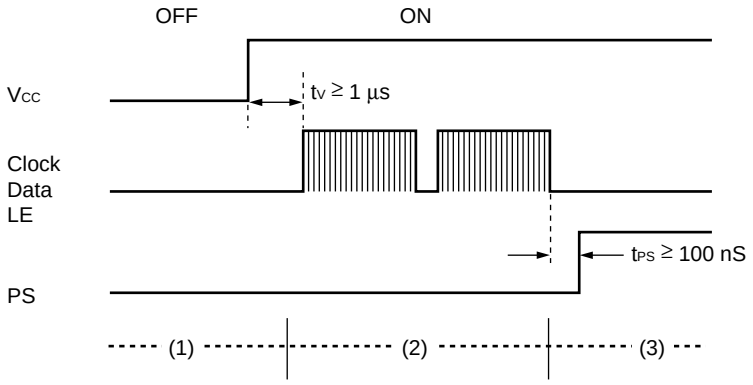

(1) PS = L (power saving mode) at Power ON
(2) Set serial data 1 µs later after power supply remains stable ($V_{CC} \geq 2.2$ V).
(3) Release power saving mode (PS: L → H) 100 nS later after setting serial data.

■ SERIAL DATA INPUT TIMING

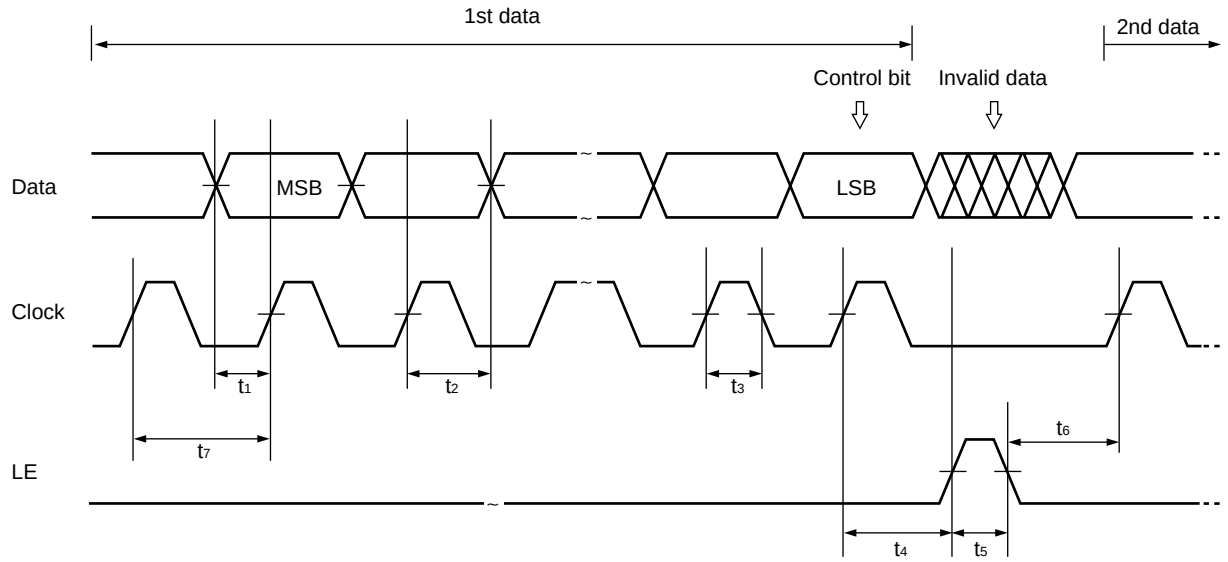

On the rising edge of the clock, one bit of data is transferred into the shift register.

Parameter	Min.	Typ.	Max.	Unit
t_1	20	–	–	ns
t_2	20	–	–	ns
t_3	30	–	–	ns
t_4	30	–	–	ns

Parameter	Min.	Typ.	Max.	Unit
t_5	100	–	–	ns
t_6	20	–	–	ns
t_7	100	–	–	ns

Note: LE should be “L” when the data is transferred into the shift register.

■ PHASE COMPARATOR OUTPUT WAVEFORM

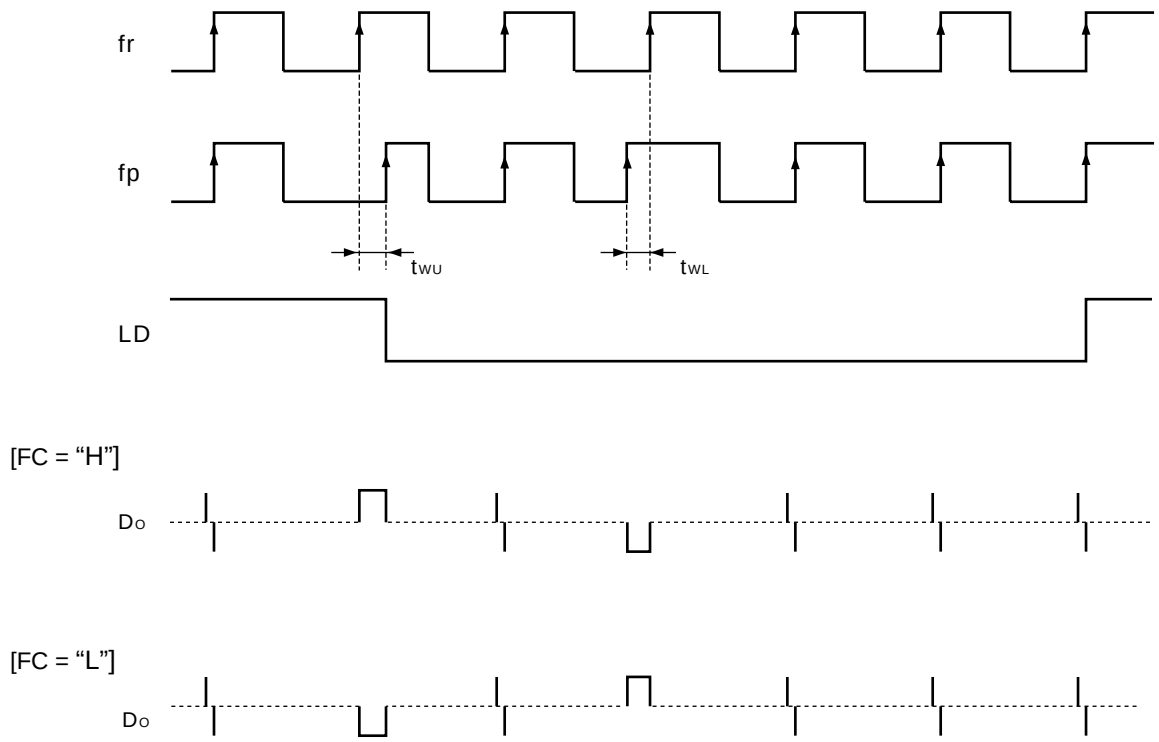

Notes:
1. Phase error detection range: -2π to $+2\pi$
2. Pulses on Do signal during locked state are output to prevent dead zone.
3. LD output becomes low when phase is t_{WU} or more. LD output becomes high when phase error is t_{WL} or less and continues to be so for three cycles or more.
4. t_{WU} and t_{WL} depend on OSC_{IN} input frequency.
   $t_{WU} \geq 2/fosc$ (s) (e. g. $t_{WU} \geq 156.3$ ns, fosc = 12.8 MHz)
   $t_{WU} \leq 4/fosc$ (s) (e. g. $t_{WL} \leq 312.5$ ns, fosc = 12.8 MHz)
5. LD becomes high during the power saving mode (PS = “L”).

■ MEASURMENT CIRCUIT (for Measuring Input Sensitivity fin/OSC$_{IN}$)

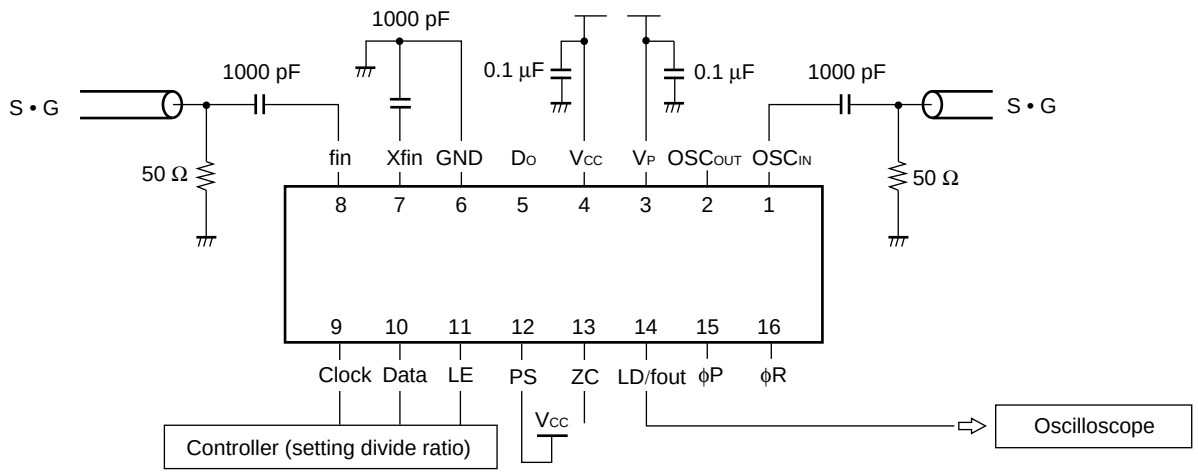

Note: SSOP-16

■ TYPICAL CHARACTERISTICS

1. fin input impedance

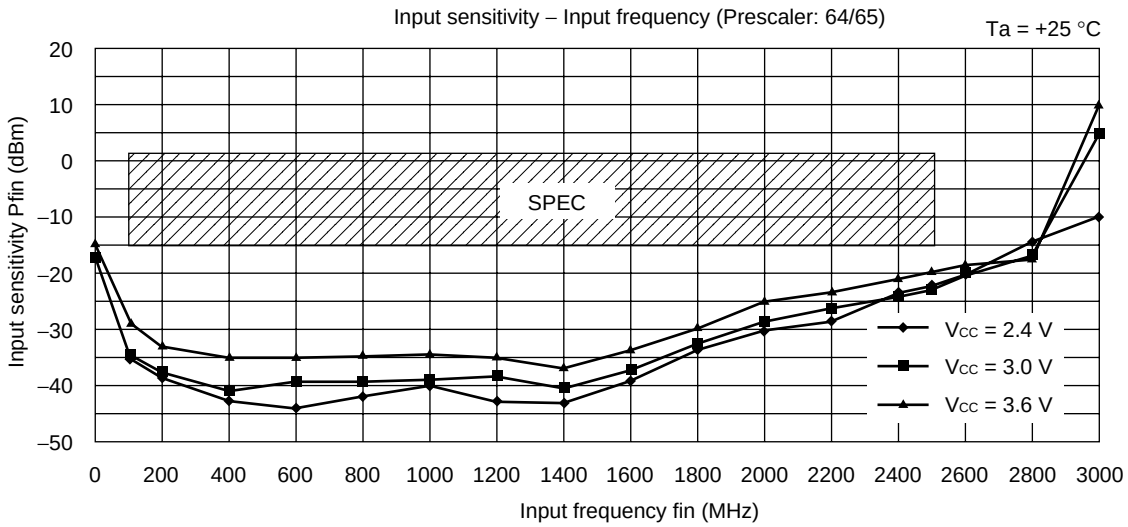

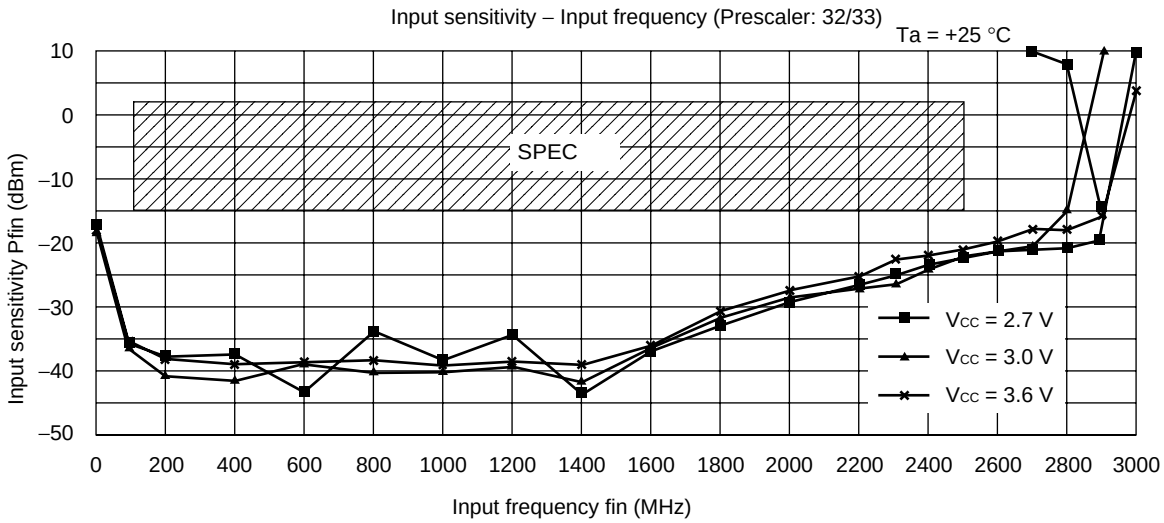

2. OSC_{IN} input frequency

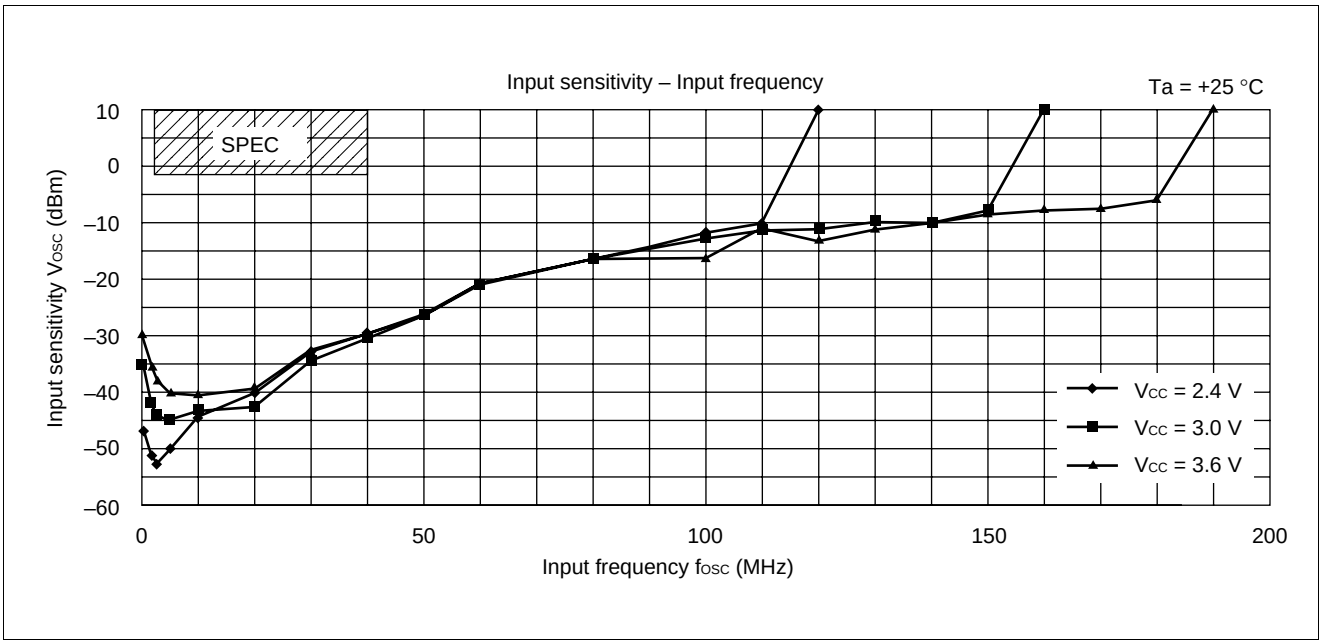

3. Do output current

1.5 mA mode

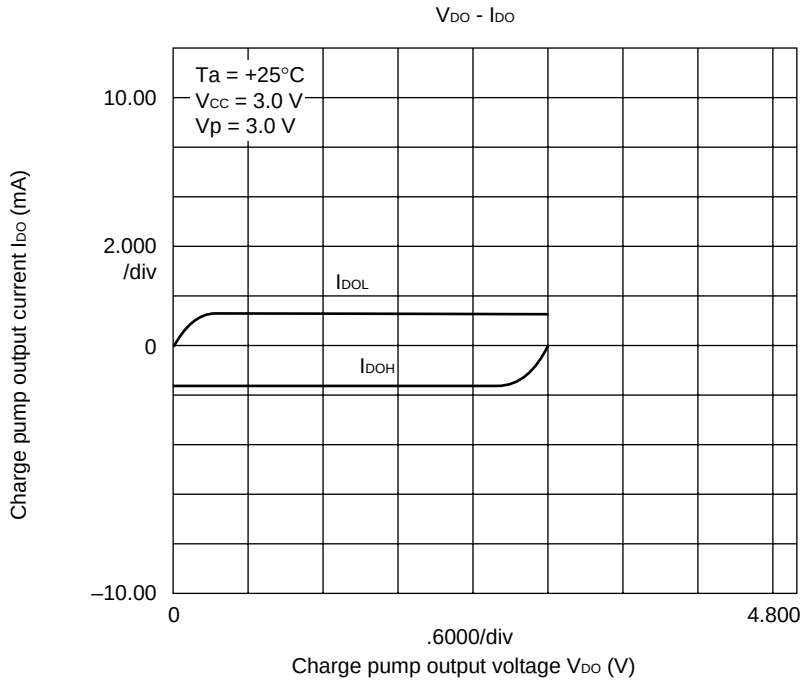

6.0 mA mode

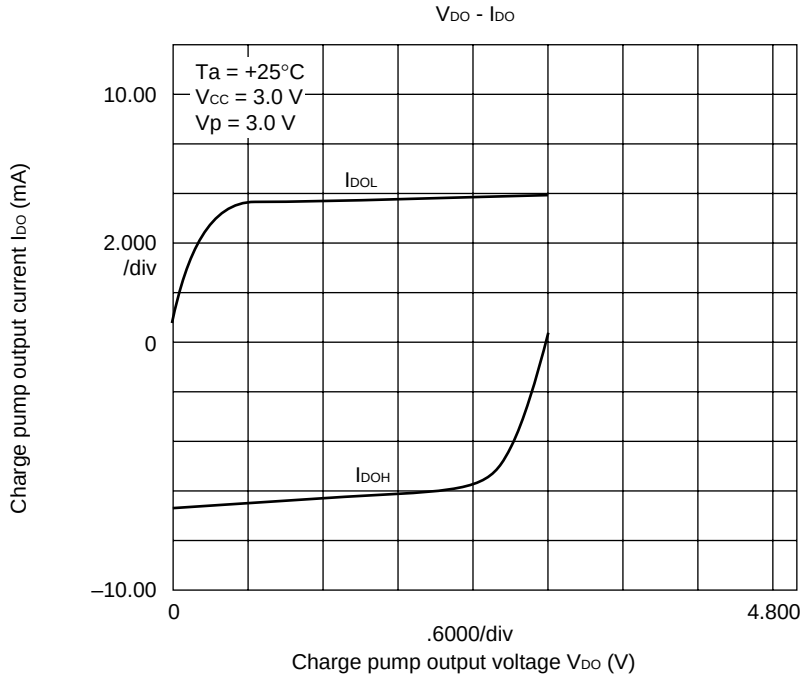

4. fin input impedance

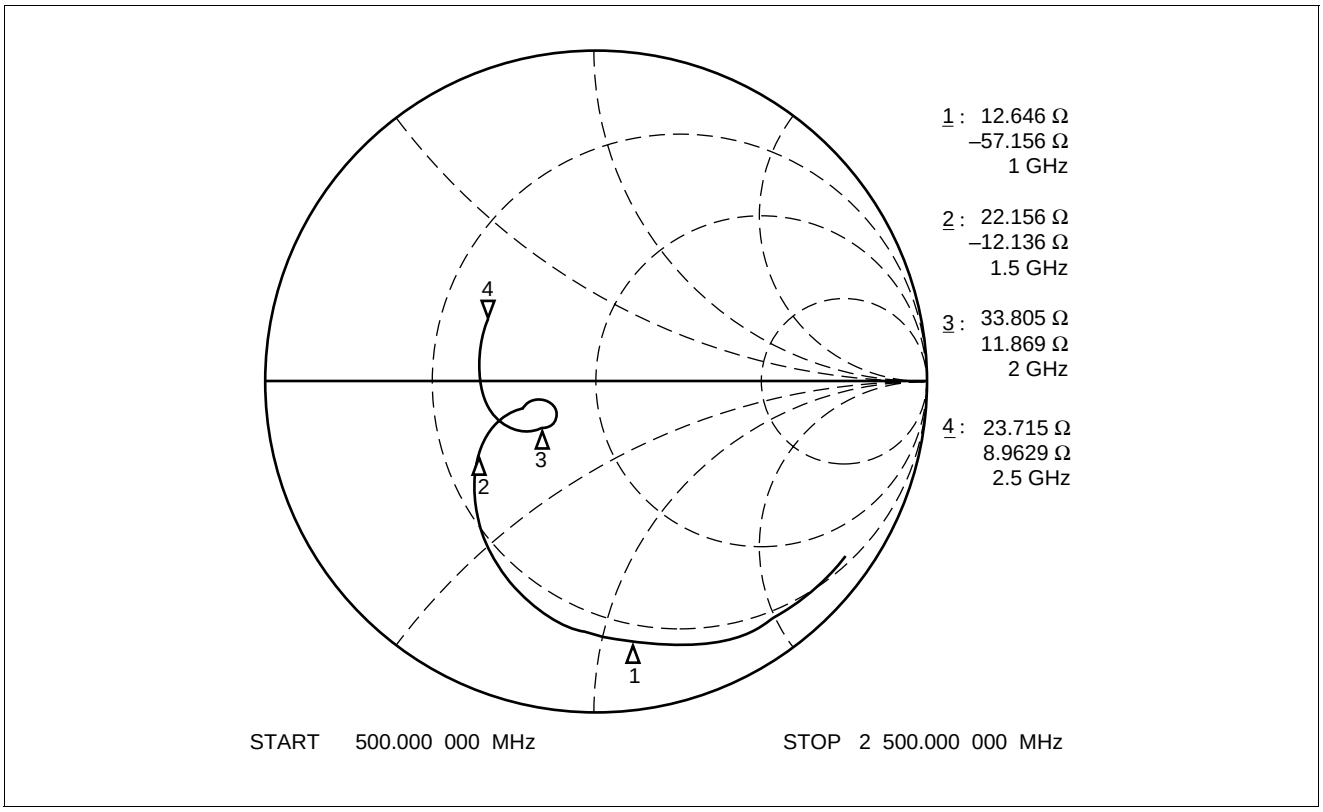

5. OSC_{IN} input impedance

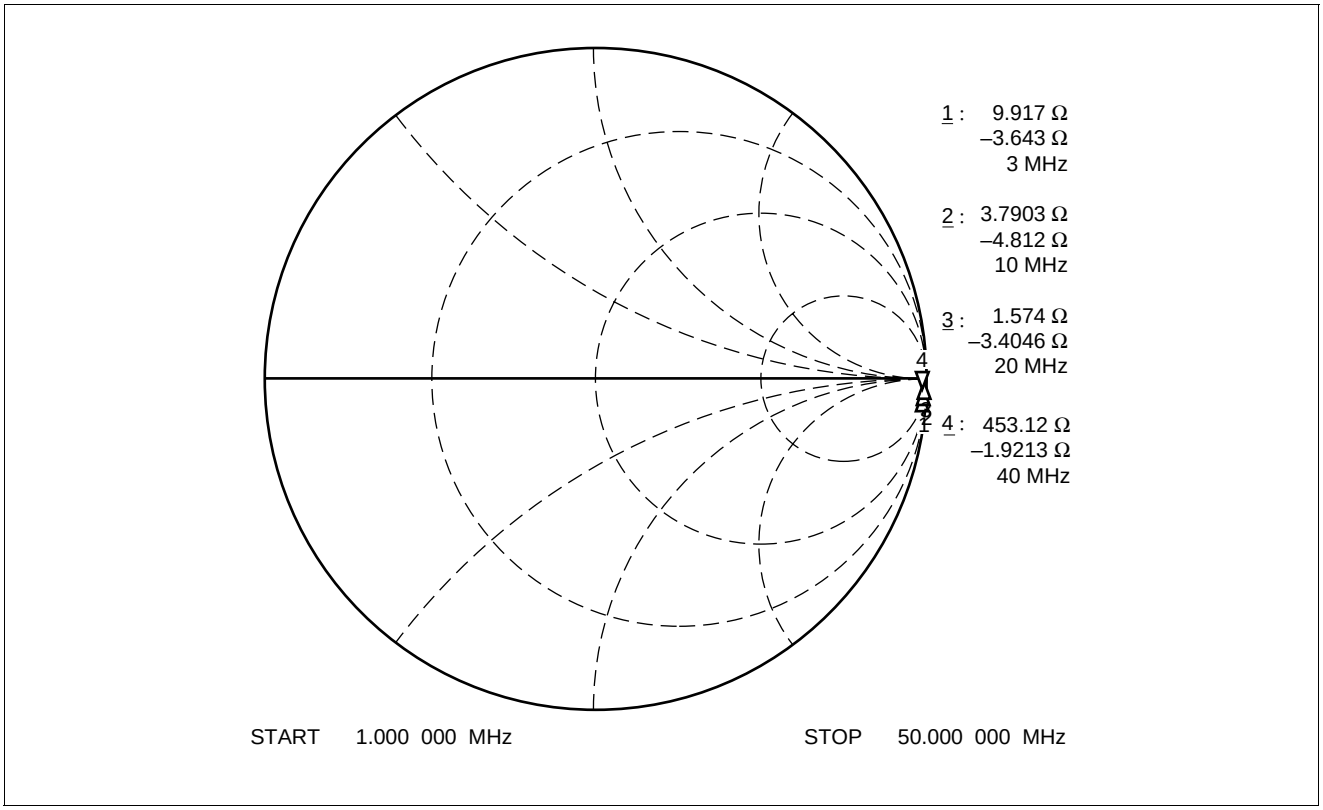

■ REFERENCE INFORMATION

Test Circuit

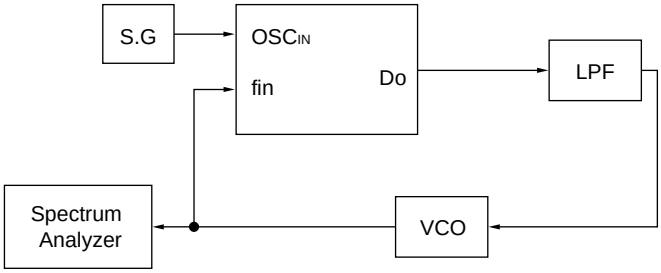

f_{VCO} = 810.45 MHz
K_V = 17 MHz/V
fr = 25 kHz
f_{OSC} = 14.4 MHz
V_{CC} = V_P = 3.0 V
V_{VCO} = 2.3 V
Ta = +25 °C
CP : 6 mA mode

LPF

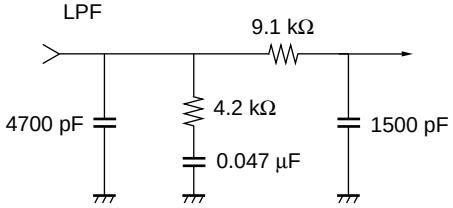

PLL Reference Leakage

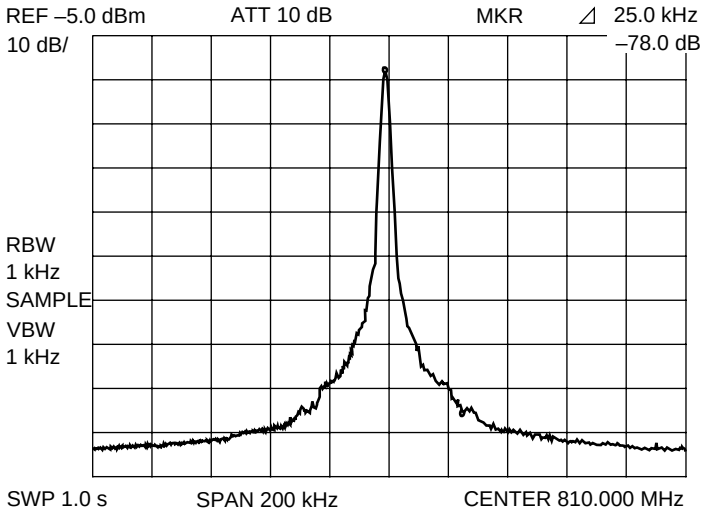

PLL Phase Noise

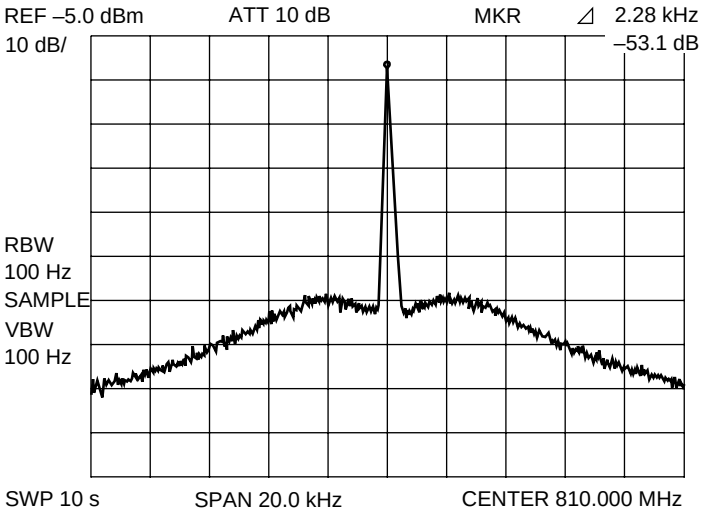

(Continued)

(Continued)

PLL Lock Up time

810 MH→826 MHz within ± 1 KHz
Lch→Hch 1.30 ms

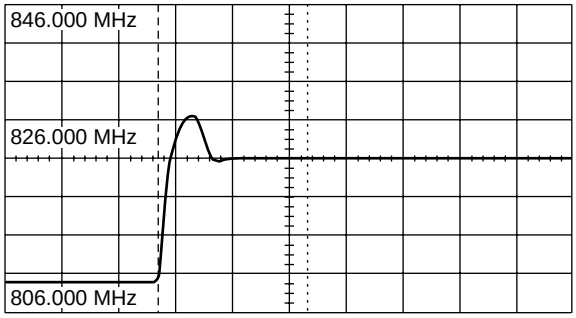

500.0 µs/div

PLL Lock Up time

826 MH→810 MHz within ± 1 KHz
Hch→Lch 1.28 ms

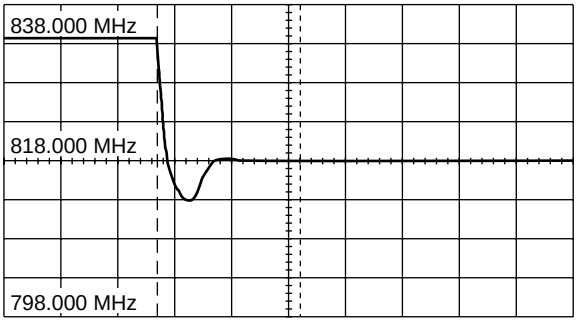

500.0 µs/div

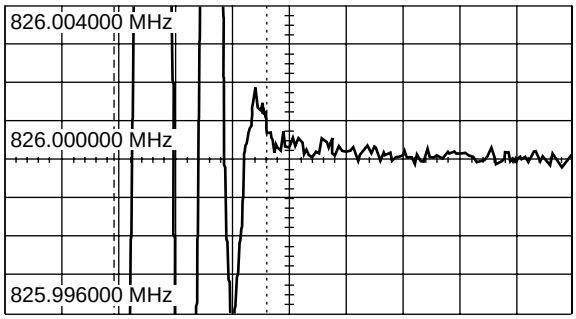

500.0 µs/div

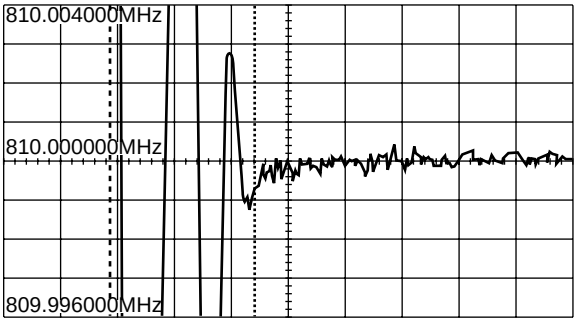

500.0 µs/div

■ APPLICATION EXAMPLE

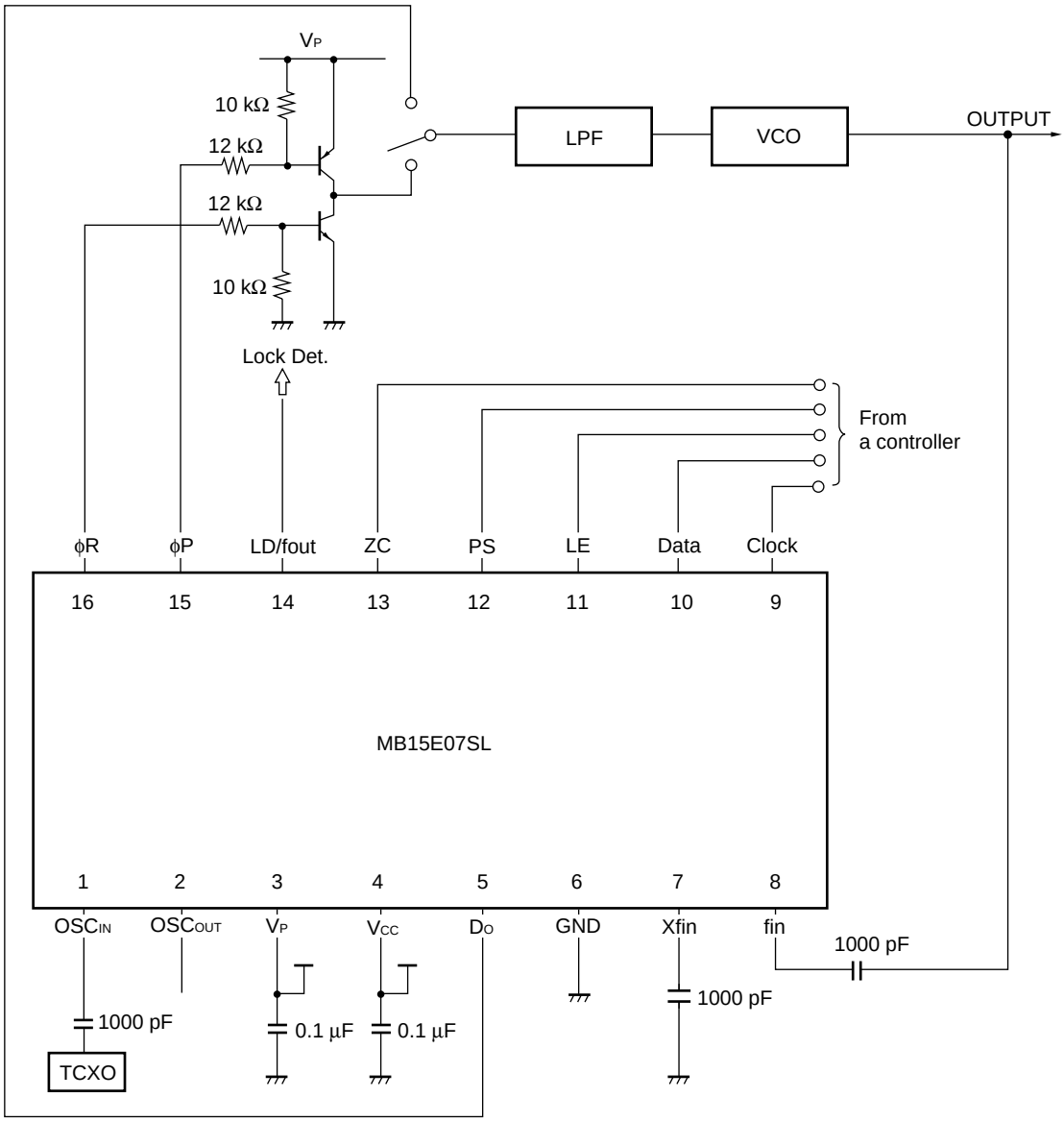

V_P: 5.5 V Max

Notes: 1. SSOP-16
2. In case of using a crystal resonator, it is necessary to optimize matching between the crystal and this LSI, and perform detailed system evaluation. It is recommended to consult with a supplier of the crystal resonator. (Reference oscillator circuit provides its own bias, feedback resistor is 100 kΩ (typ).)

■ USAGE PRECAUTIONS

To protect against damage by electrostatic discharge, note the following handling precautions:
-Store and transport devices in conductive containers.
-Use properly grounded workstations, tools, and equipment.
-Turn off power before inserting device into or removing device from a socket.
-Protect leads with a conductive sheet when transporting a board-mounted device.

■ ORDERING INFORMATION

Part number	Package	Remarks
MB15E07SLPFV1	16-pin, Plastic SSOP (FPT-16P-M05)	
MB15E07SLPV1	16-pad, Plastic BCC (LCC-16P-M06)	

■ PACKAGE DIMENSIONS

16-pin plastic SSOP
(FPT-16P-M05)

* : These dimensions do not include resin protrusion.

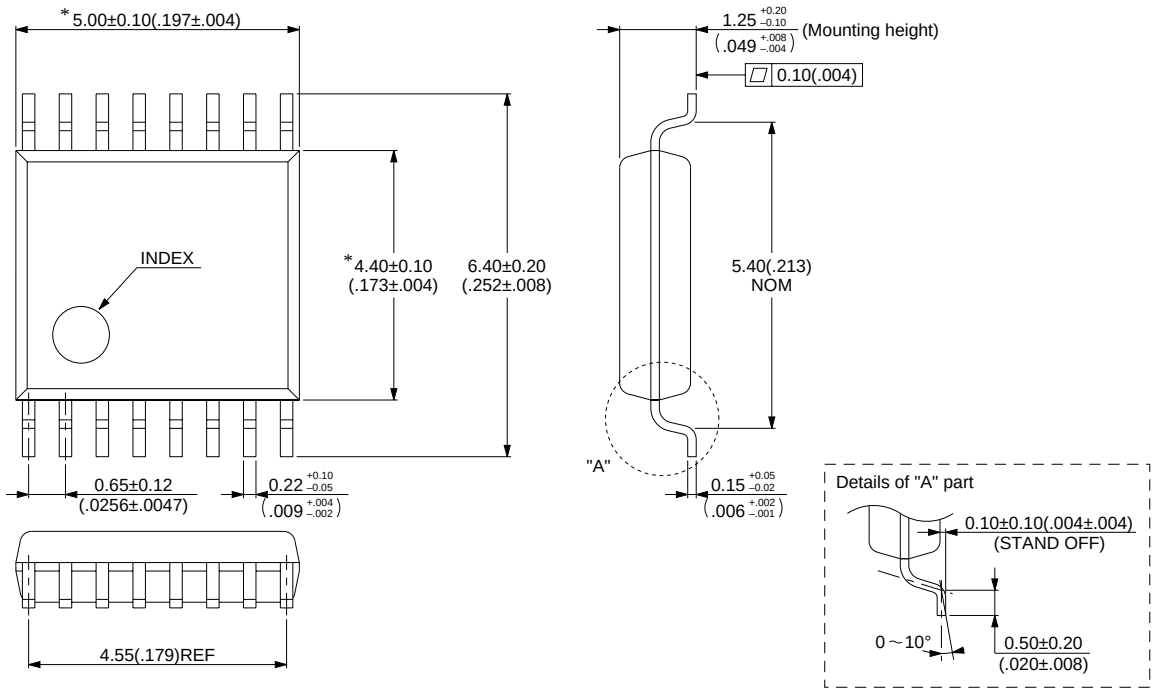

© 1994 FUJITSU LIMITED F16013S-2C-4

Dimensions in mm (inches)

(Continued)

(Continued)

16-pad plastic BCC
(LCC-16P-M06)

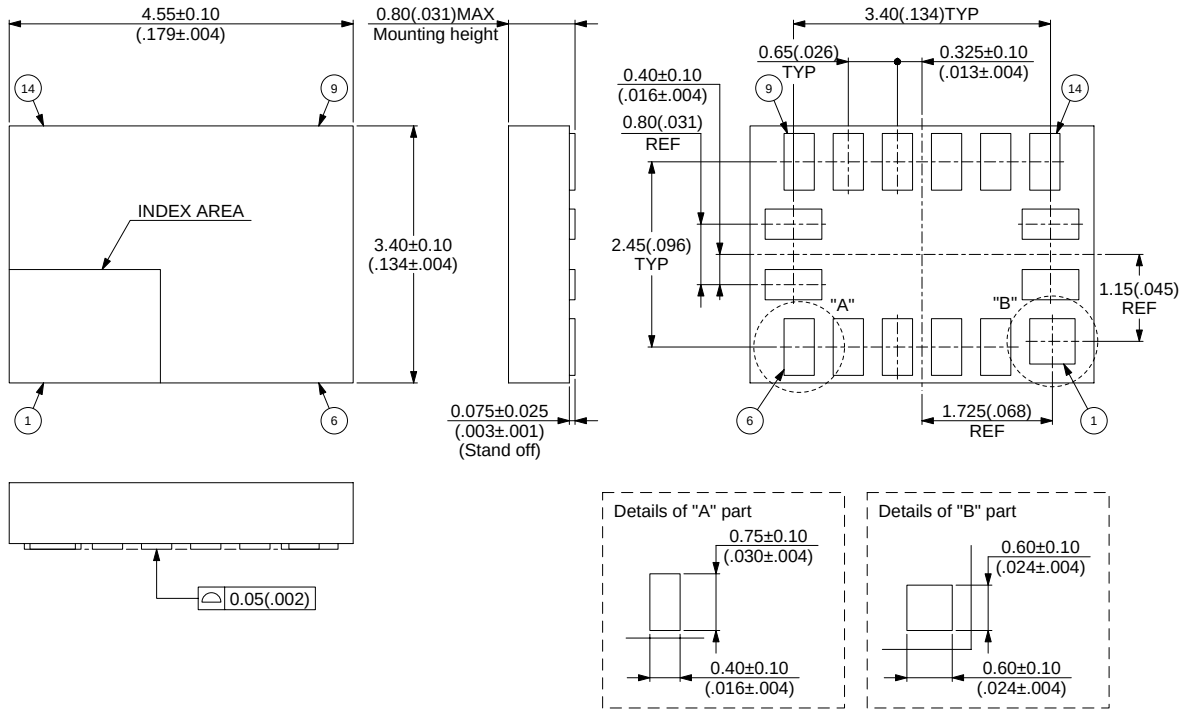

© 1999 FUJITSU LIMITED C16017S-1C-1

Dimensions in mm (inches)

FUJITSU LIMITED

For further information please contact:

Japan
FUJITSU LIMITED
Corporate Global Business Support Division
Electronic Devices
KAWASAKI PLANT, 4-1-1, Kamikodanaka
Nakahara-ku, Kawasaki-shi
Kanagawa 211-8588, Japan
Tel: 81(44) 754-3763
Fax: 81(44) 754-3329

http://www.fujitsu.co.jp/

North and South America
FUJITSU MICROELECTRONICS, INC.
Semiconductor Division
3545 North First Street
San Jose, CA 95134-1804, USA
Tel: (408) 922-9000
Fax: (408) 922-9179

Customer Response Center
Mon. - Fri.: 7 am - 5 pm (PST)
Tel: (800) 866-8608
Fax: (408) 922-9179

http://www.fujitsumicro.com/

Europe
FUJITSU MIKROELEKTRONIK GmbH
Am Siebenstein 6-10
D-63303 Dreieich-Buchschlag
Germany
Tel: (06103) 690-0
Fax: (06103) 690-122

http://www.fujitsu-ede.com/

Asia Pacific
FUJITSU MICROELECTRONICS ASIA PTE LTD
#05-08, 151 Lorong Chuan
New Tech Park
Singapore 556741
Tel: (65) 281-0770
Fax: (65) 281-0220

http://www.fmap.com.sg/

F9904
© FUJITSU LIMITED Printed in Japan

All Rights Reserved.

The contents of this document are subject to change without notice. Customers are advised to consult with FUJITSU sales representatives before ordering.

The information and circuit diagrams in this document are presented as examples of semiconductor device applications, and are not intended to be incorporated in devices for actual use. Also, FUJITSU is unable to assume responsibility for infringement of any patent rights or other rights of third parties arising from the use of this information or circuit diagrams.

FUJITSU semiconductor devices are intended for use in standard applications (computers, office automation and other office equipment, industrial, communications, and measurement equipment, personal or household devices, etc.).
CAUTION:
Customers considering the use of our products in special applications where failure or abnormal operation may directly affect human lives or cause physical injury or property damage, or where extremely high levels of reliability are demanded (such as aerospace systems, atomic energy controls, sea floor repeaters, vehicle operating controls, medical devices for life support, etc.) are requested to consult with FUJITSU sales representatives before such use. The company will not be responsible for damages arising from such use without prior approval.

Any semiconductor devices have an inherent chance of failure. You must protect against injury, damage or loss from such failures by incorporating safety design measures into your facility and equipment such as redundancy, fire protection, and prevention of over-current levels and other abnormal operating conditions.

If any products described in this document represent goods or technologies subject to certain restrictions on export under the Foreign Exchange and Foreign Trade Law of Japan, the prior authorization by Japanese government will be required for export of those products from Japan.