查询MB509供应商 捷多邦，专业PCB打样工厂，24小时加急出货

Sept. 1995
Edition 3.0a

FUJITSU

DATA SHEET

MB509

TWO MODULUS PRESCALER WITH STAND-BY MODE

TWO MODULUS PRESCALER WITH STAND-BY MODE

The Fujitsu MB509 is a low power, two modulus prescaler equipped with the standby mode. The MB509 is used in conjunction with a frequency synthesizer to form a Phase Locked Loop (PLL) and will divide the input frequency by the modulus of 65/65 or 128/129.

Power consumption is typically 11.5mA at 5.0V. under normal operation, with the current reduced to180µA in standby mode. By using MB509 with the MB87076, intermittent operating mode can be achieved.

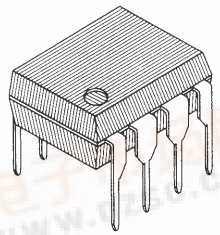

PLASTIC PACKAGE
DIP-08P-M01

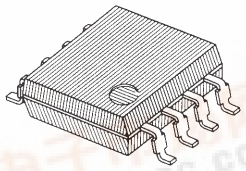

PLASTIC PACKAGE
FPT-08P-M01

FEATURES

- High Frequency Operation: fmax = 1.1GHz max. (P_{IN} = –4dBm min.)
- Pulse Swallow Function: 64/65, 128/129
- Power Supply Consumption: 58mW typ.
- Stand-by Current: 180µA typ.
- Stable Output Amplitude: $V_O = 1.6V_{p-p}$ typ.
- Complete PLL synthesizer circuit with the Fujitsu MB87076, PLL frequency synthesizer IC
- Plastic 8-pin Dual-In-Line Package (Suffix: –P)
  Plastic 8-pin Mini Flat Package (Suffix: –PF)
- Built-in a Termination Resistor
  Stable output amplitude is obtained up to output load capacitance of 8pF

PIN ASSIGNMENT

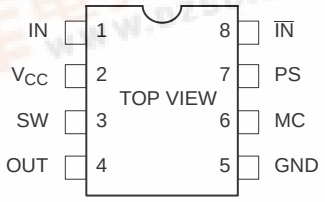

ABSOLUTE MAXIMUM RATINGS (See Note)

Rating	Symbol	Value	Unit
Power Supply Voltage	V_{CC}	–0.5 to +7.0	V
Input Voltage	V_{IN}	–0.5 to V_{CC}	V
Output Current	I_O	10	mA
Storage Temperature	T_{STG}	–55 to +125	°C

Note: Permanent device damage may occur if the above **Absolute Maximum Ratings** are exceeded. Functional operation should be restricted to the conditions as detailed in the operational sections of this data sheet. Exposure to absolute maximum rating conditions for extended periods may affect device reliability.

This device contains circuitry to protect the inputs against damage due to high static voltages or electric fields. However, it is advised that normal precautions be taken to avoid application of any voltage higher than maximum rated voltages to this high impedance circuit.

找PDF 维库一下 pdf.dzsc.com

Copyright © 1990 by FUJITSU LIMITED and FUJITSU MICROELECTRONICS, INC.

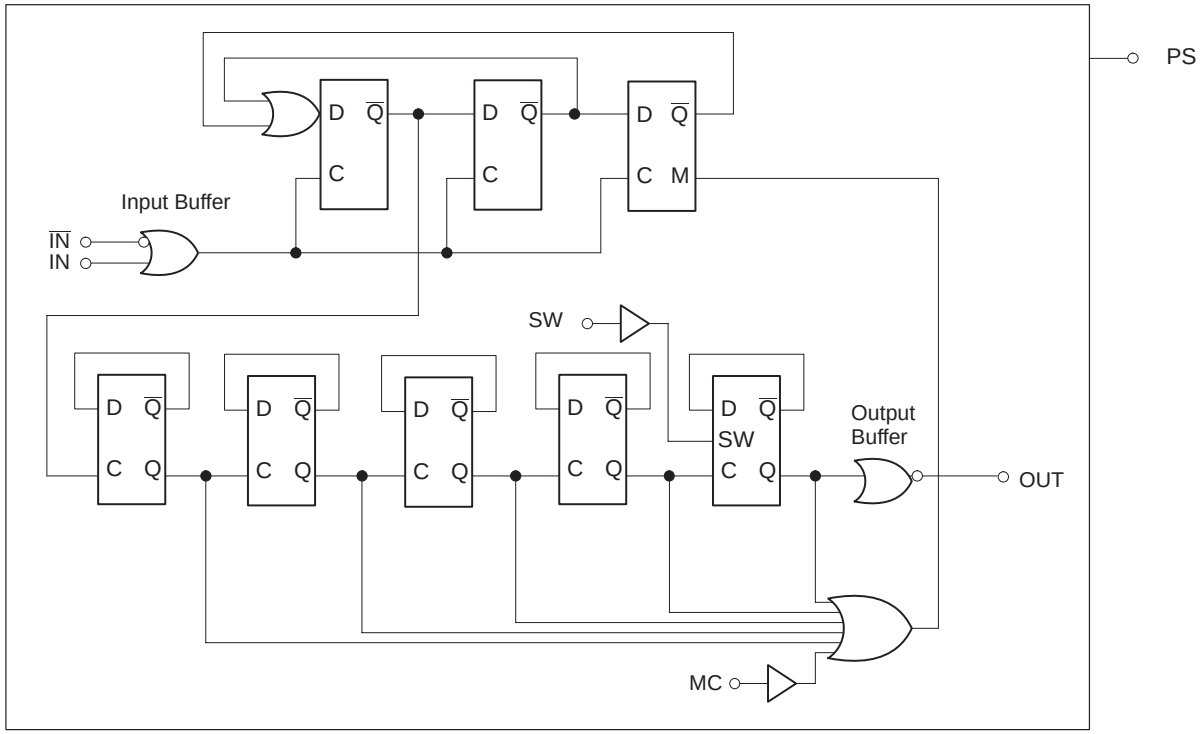

PS	SW	MC	Divide Ratio
H	H	H	1/64
H	H	L	1/65
H	L	H	1/128
H	L	L	1/129
L	—	—	Stand-by mode

Note:
SW: H =V_{CC}, L = open
MC: H = 3.0V to V_{CC}, L = GND to 0.8V
PS: H = 2.0V to V_{CC}, L = GND to 0.4V

Figure 1. MB509 Block Diagram

PIN DESCRIPTION

Pin Number	Symbol	Descriptions
1	IN	Input
2	V_{CC}	Power Supply, +5V
3	SW	Divide Ratio Control Input (See Divide Ratio Table)
4	OUT	Output
5	GND	Ground
6	MC	Modulus Control Input (See Divide Ratio Table)
7	PS	Stand–by Control Input (See Divide Ratio Table)
8	$\overline{IN}$	Complementary Input

RECOMMENDED OPERATING CONDITIONS

Parameter	Symbol	Value			Unit
		Min.	Typ.	Max.	
Power Supply Voltage	V_{CC}	4.5	5.0	5.5	V
Operating Temperature	T_A	–40	—	+85	°C
Load Capacitance	C_L	—	—	8	pF

ELECTRICAL CHARACTERISTICS

(Recommended Operating Conditions unless otherwise noted)

Parameter	Symbol	Condition	Value			Unit
			Min.	Typ.	Max.	
Power Supply Curent	I_{CC}		—	11.6	—	mA
	I_{PS}	Stand-by mode	—	180	—	µA
Output Amplitude	V_O	Built-in a Termination Resistor. Load Capacitance=8pF	1.0	1.6	—	V_{p-p}
Input Frequency	f_{IN}	With input coupling capacitor 1000pF	10	—	1100	MHz
Input Signal Amplitude	P_{IN}	—	–4	—	5.5	dBm
High Level Input Voltage for MC	V_{IH}	—	3.0	—	—	V
Low Level Input Voltage for MC	V_{IL}	—	—	—	0.8	V
High Level Input Voltage for SW	V_{IHS}*		V_{CC} –0.1	V_{CC}	V_{CC} +0.1	V
Low Level Input Voltage for SW	V_{ILS}		Open			V
High Level Input Voltage for PS	V_{IH}	—	2.0	—	—	V
Low Level Input Voltage for PS	V_{IL}	—	—	—	0.4	V
High Level Input Current for MC	I_{IH}	V_{IH} = 3.0V	—	—	0.4	mA
Low Level Input Current for MC	I_{IL}	V_{IL} = 0.8V	–0.2	—	—	mA
Modulus Set-up Time MC to Output	t_{SET}	—	—	16	26	ns

Note: *Design Guarantee

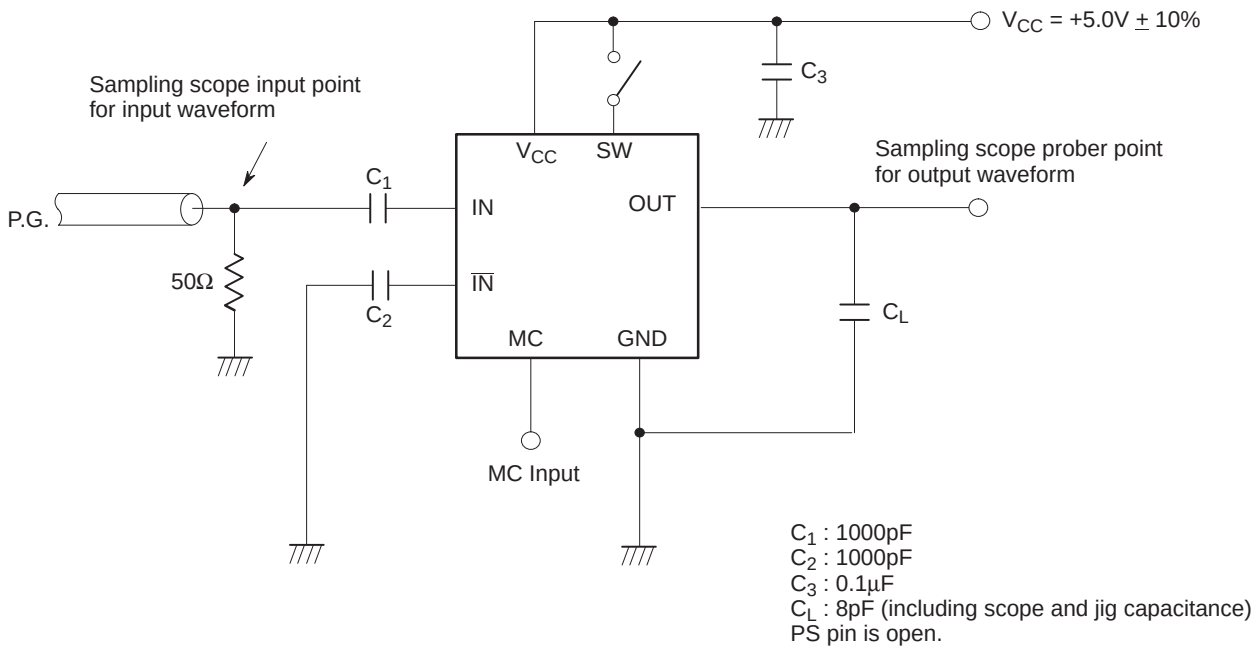

Figure 2. Test Circuit

TIMING CHART (2 MODULUS)

Example: Divide ratio = 64/65

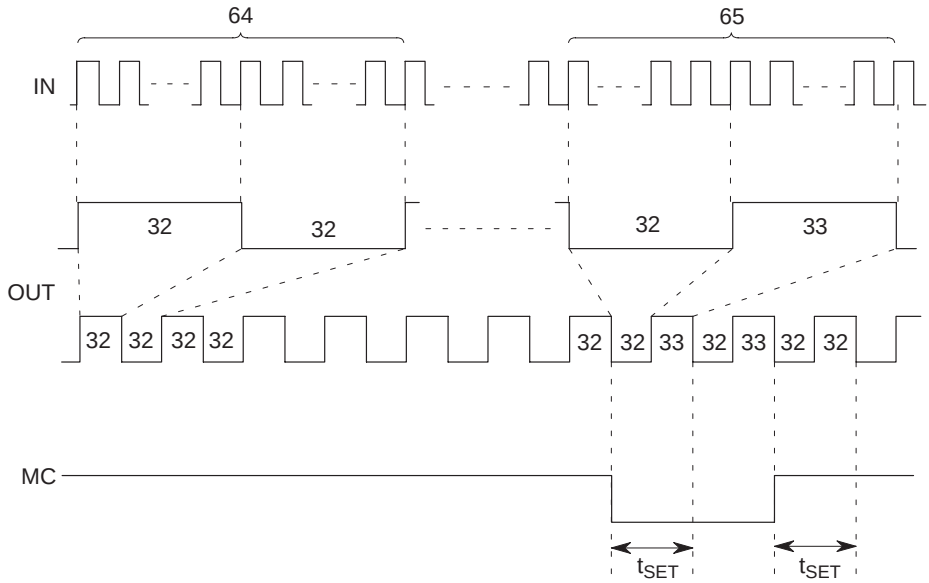

Note: When divide ratio of 65 is selected, positive pulse is added by one to 33.
The typical set up time is 16ns from the MC signal input to the timing of change of prescaler divide ratio.

TYPICAL CHARACTERISTICS CURVES

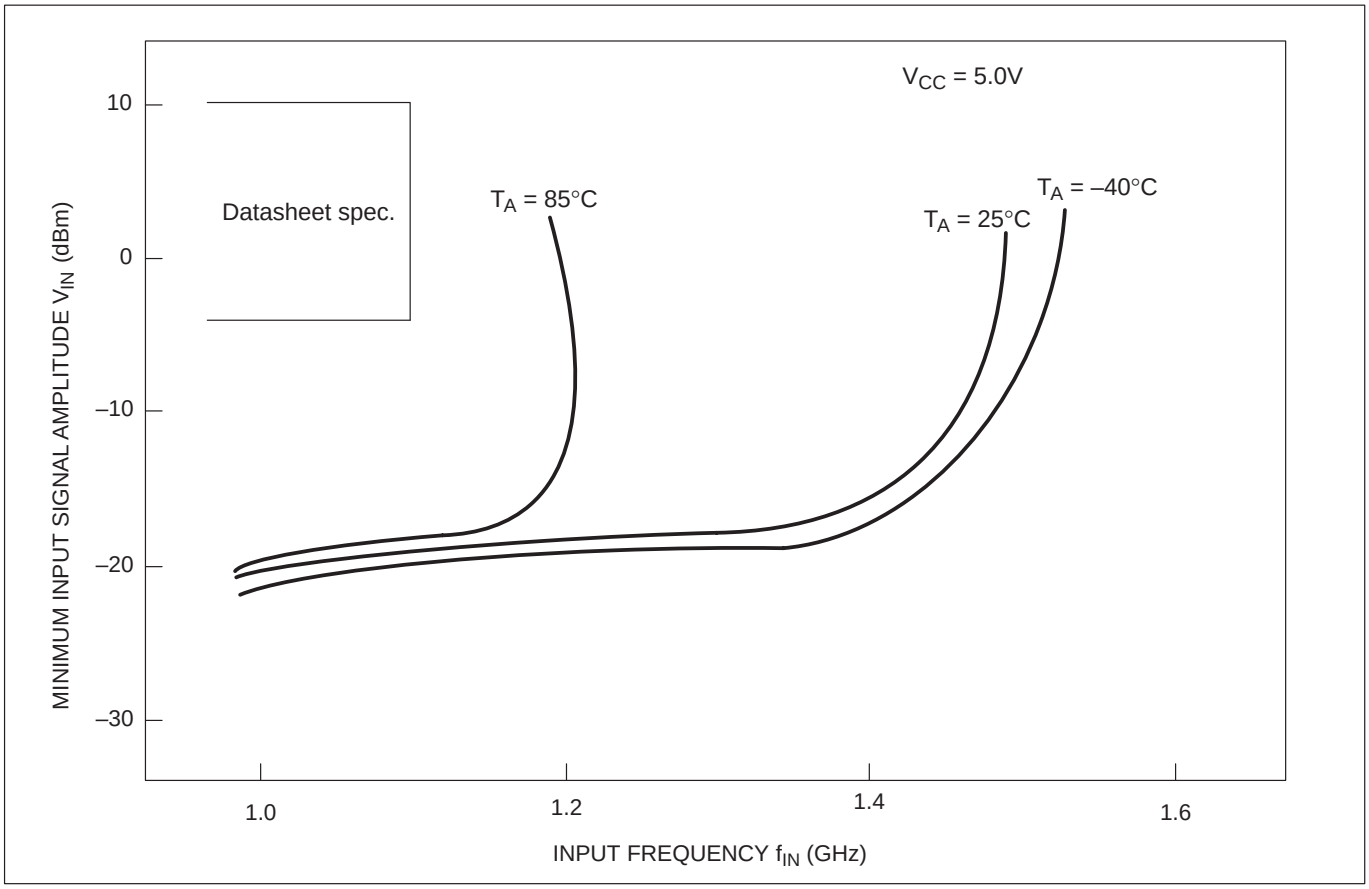

Figure 3. Input Signal Amplitude vs. Input Frequency

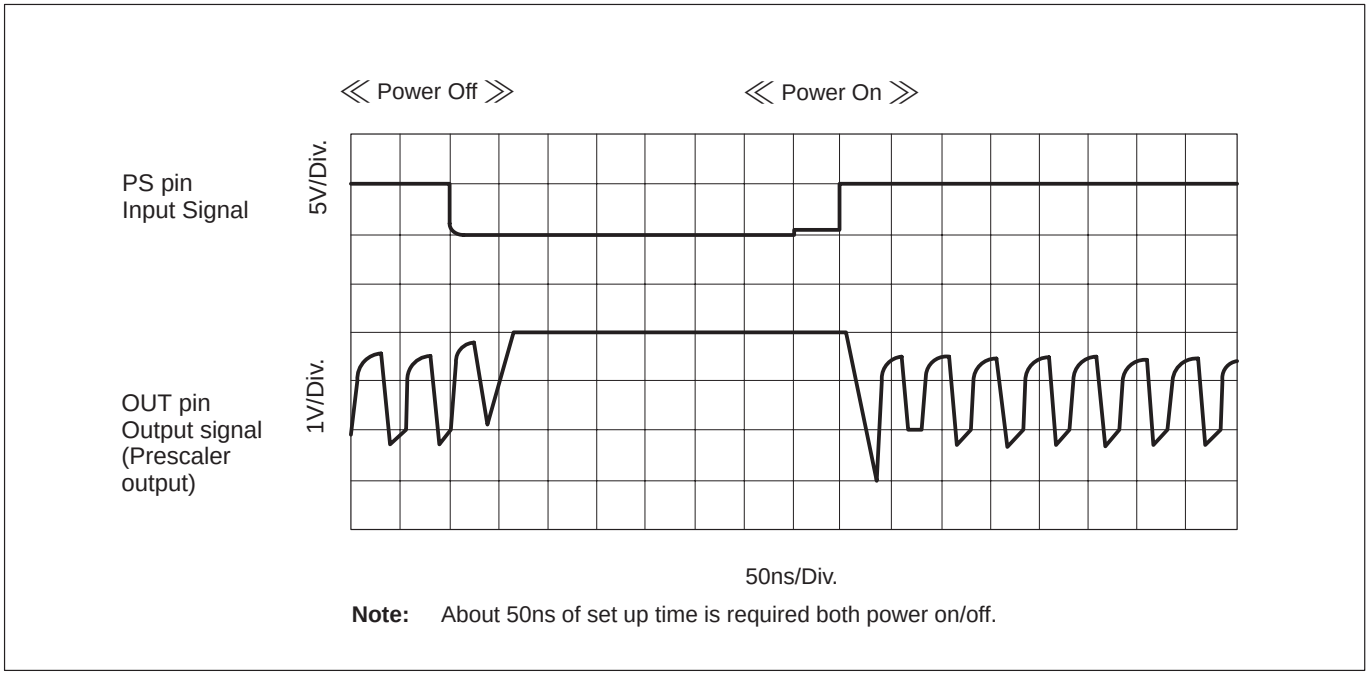

Figure 4. Waveform of Stand-by Mode

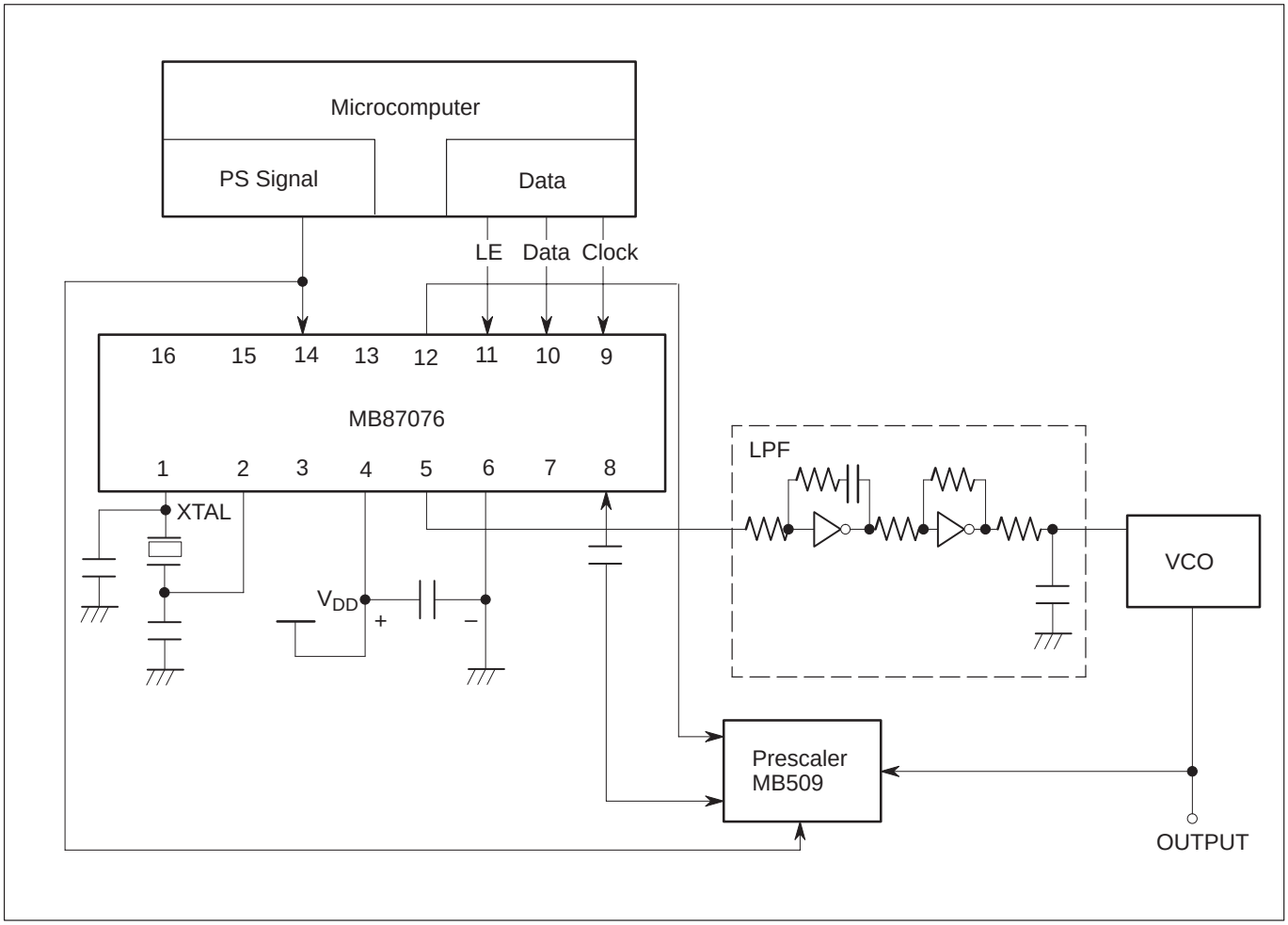

Figure 5. Typical Application Example

PACKAGE DIMENSIONS

8-LEAD PLASTIC DUAL IN-LINE PACKAGE
(CASE No: DIP-08P-M01)

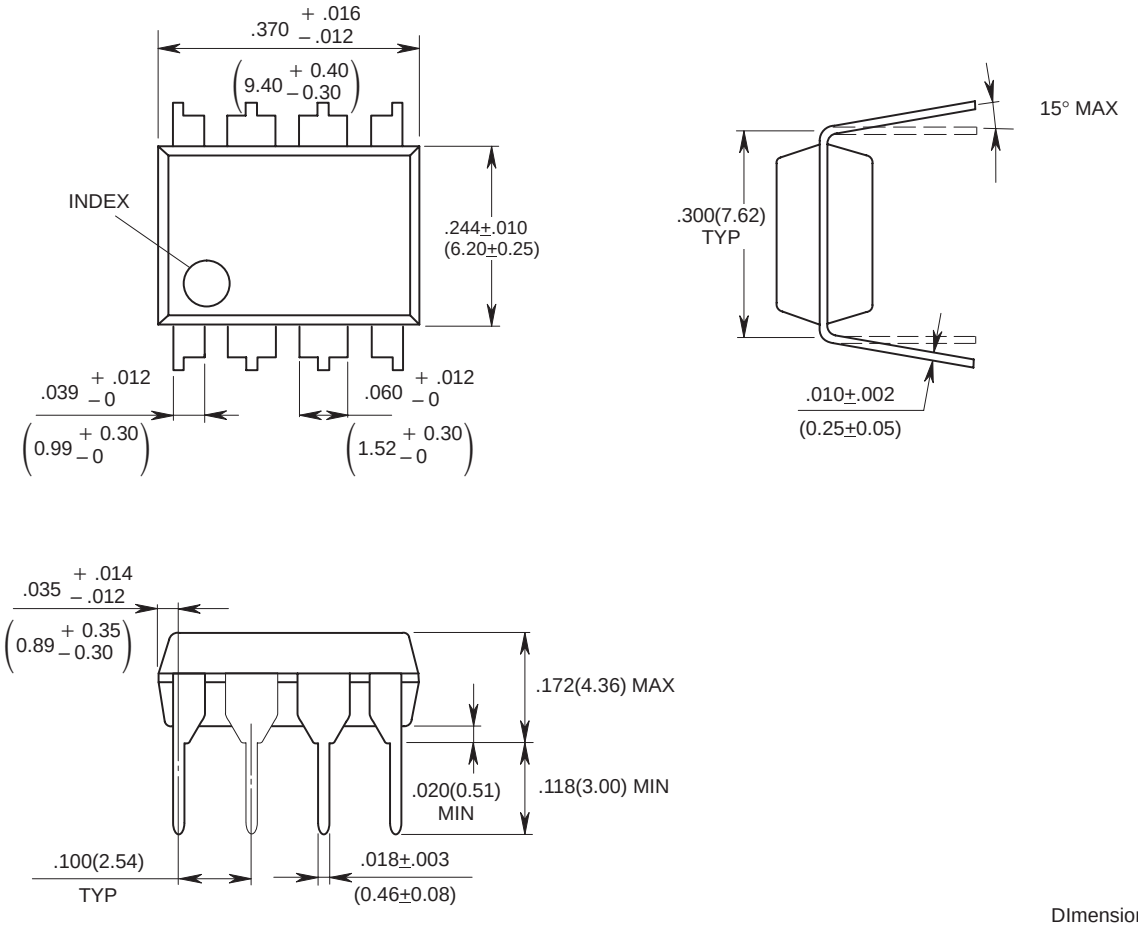

© 1988 FUJITSU LIMITED D08006S-2C

DImensions in
inches (millimeters)

PACKAGE DIMENSIONS (Continued)

8-LEAD PLASTIC FLAT PACKAGE
(CASE No: FPT-08P-M01)

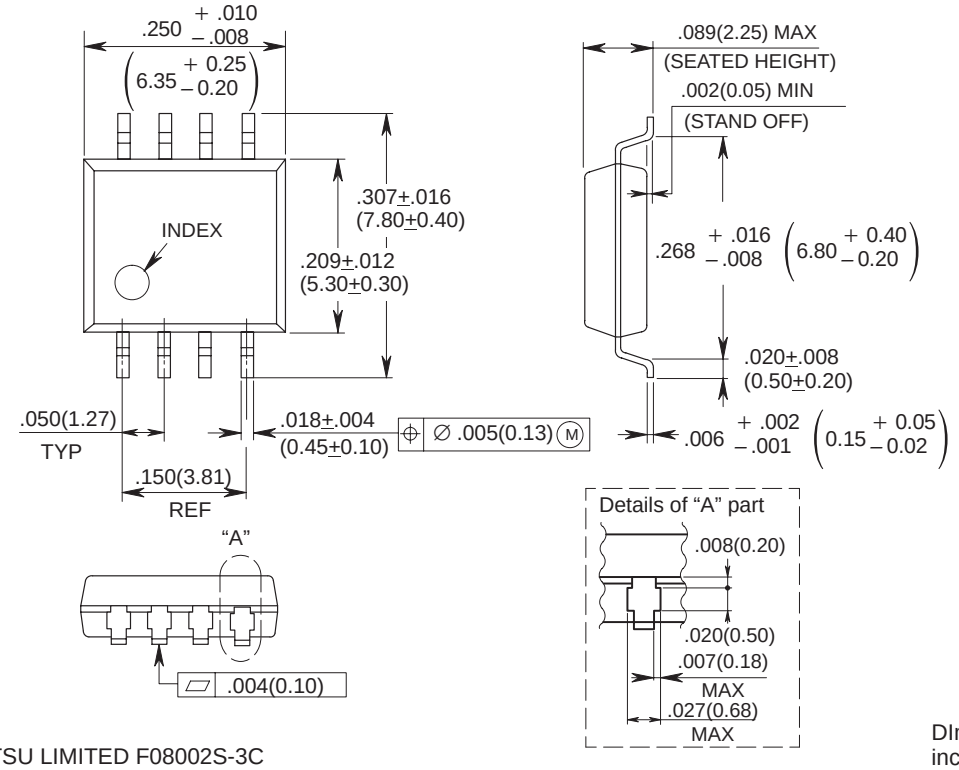

© 1988 FUJITSU LIMITED F08002S-3C

DImensions in
inches (millimeters)

Worldwide Headquarters

Japan

Fujitsu Limited

Tel: +81 44 754 3753
Fax: +81 44 754 3332

4-1-1 Kamiodanaka
Nakahara-ku, Kawasaki-shi.
Kanagawa 211-88
Japan

http://www.fujitsu.co.jp/

Asia

Fujitsu Microelectronics Asia PTE Limited

Tel: +65 281 0770
Fax: +65 281 0220

#05-08, 151 Lorong Chuan
New Tech Park
Singapore 556741

http://www.fsl.com.sg/

USA

Tel: +1 408 922 9000
Fax: +1 408 922 9179

Fujitsu Microelectronics Inc
3545 North First Street
San José CA 95134-1804
USA

Tel: +1 800 866 8608
Fax: +1 408 922 9179

Customer Response Center
Mon-Fri: 7am-5pm (PST)

http://www.fujitsumicro.com/

Europe

Tel: +49 6103 6900
Fax: +49 6103 6901

Fujitsu Mikroelektronik GmbH
Am Siebenstein 6-10
D-63303 Dreieich-Buchschlag
Germany

http://www.fujitsu.ede.com/

All Right Reserved.

The information contained in this document has been carefully checked and is believed to be reliable. However, Fujitsu Microelectronics, Inc. assumes no responsibility for inaccuracies.

The information conveyed in this document does not convey any license under the copyrights, patent rights or trademarks claimed and owned by Fujitsu Limited, its subsidiaries, or Fujitsu Microelectronics, Inc.

Fujitsu Microelectronics, Inc. reserves the right to change products or specifications without notice.

No part of the publication may be copied or reproduced in any form or by any means, or transferred to any third party without prior written consent of Fujitsu Microelectronics, Inc.