6-Bit 2:1 Mux-Register

MC10E167
MC100E167

6-BIT 2:1
MUX-REGISTER

The MC10E/100E167 contains six 2:1 multiplexers followed by D flip-flops with single-ended outputs. Input data are selected by the Select control, SEL. The selected data are transferred to the flip-flop outputs by a positive edge on CLK1 or CLK2 (or both). A HIGH on the Master Reset (MR) pin asynchronously forces all Q outputs LOW.

- 1000MHz Min. Operating Frequency
- 800ps Max. Clock to Output
- Single-Ended Outputs
- Asynchronous Master Resets
- Dual Clocks
- Extended 100E V_{EE} Range of – 4.2V to – 5.46V
- 75kΩ Input Pulldown Resistors

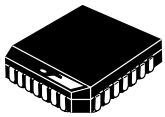

FN SUFFIX
PLASTIC PACKAGE
CASE 776-02

Pinout: 28-Lead PLCC (Top View)

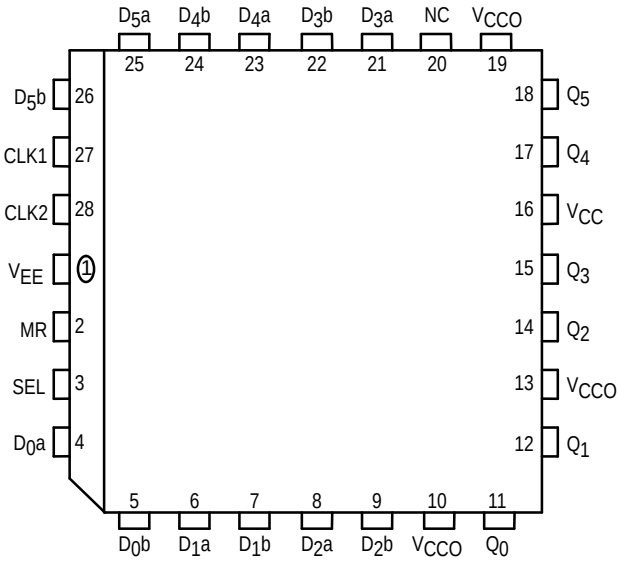

* All V_{CC} and V_{CCO} pins are tied together on the die.

LOGIC DIAGRAM

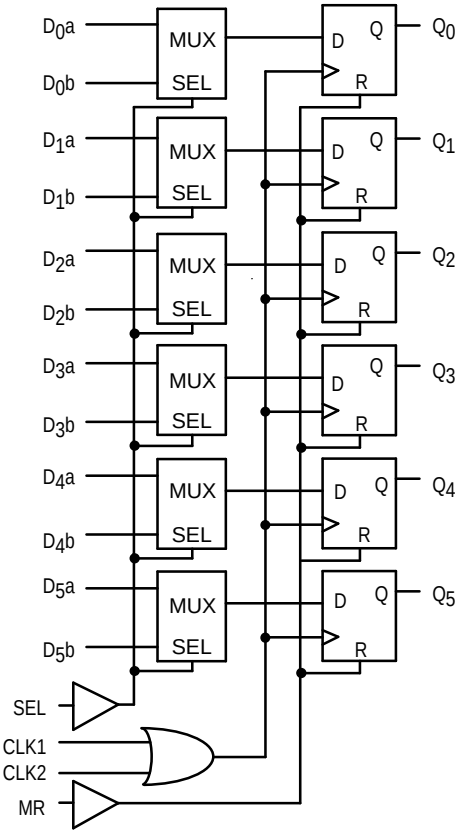

PIN NAMES

Pin	Function
D_0a – D_5a	Input Data a
D_0b – D_5b	Input Data b
SEL	Select Input
CLK1, CLK2	Clock Inputs
MR	Master Reset
Q_0 – Q_5	Data Outputs

FUNCTIONS

SEL	Data
H	a
L	b

DC CHARACTERISTICS (V_{EE} = V_{EE}(min) to V_{EE}(max); V_{CC} = V_{CCO} = GND)

Symbol	Characteristic	0°C min	0°C typ	0°C max	25°C min	25°C typ	25°C max	85°C min	85°C typ	85°C max	Unit	Condition
I_{IH}	Input HIGH Current			150			150			150	μA	
I_{EE}	Power Supply Current										mA	
	10E		94	113		94	113		94	113		
	100E		94	113		94	113		108	130		

AC CHARACTERISTICS (V_{EE} = V_{EE}(min) to V_{EE}(max); V_{CC} = V_{CCO} = GND)

Symbol	Characteristic	0°C min	0°C typ	0°C max	25°C min	25°C typ	25°C max	85°C min	85°C typ	85°C max	Unit	Condition
f_{MAX}	Max. Toggle Frequency	1000	1400		1000	1400		1000	1400		MHz	
t_{PLH} t_{PHL}	Propagation Delay to Output										ps	
	Clk	450	650	800	450	650	800	450	650	800		
	MR	450	650	850	450	650	850	450	650	850		
t_s	Setup Time										ps	
	D	100	– 50		100	– 50		100	– 50			
	SEL	275	125		275	125		275	125			
t_h	Hold Time										ps	
	D	300	50		300	50		300	50			
	SEL	75	–125		75	–125		75	–125			
t_{RR}	Reset Recovery Time	750	550		750	550		750	550		ps	
t_{PW}	Minimum Pulse Width										ps	
	Clk, MR	400			400			400				
t_{SKEW}	Within-Device Skew		75			75			75		ps	1
t_r t_f	Rise/Fall Times										ps	
	20 - 80%	300	450	800	300	450	800	300	450	800		

1. Within-device skew is defined as identical transitions on similar paths through a device.

OUTLINE DIMENSIONS

FN SUFFIX
PLASTIC PLCC PACKAGE
CASE 776–02
ISSUE D

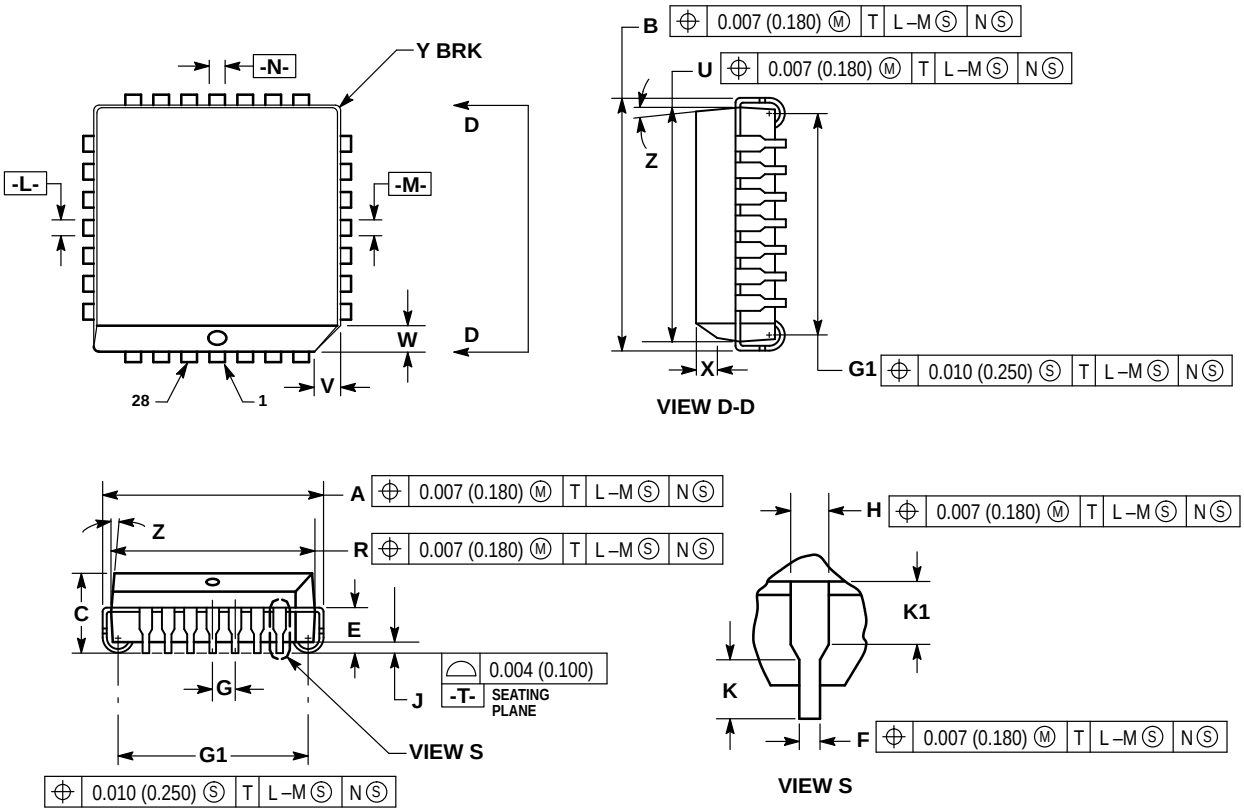

NOTES:
1. DATUMS -L-, -M-, AND -N- DETERMINED WHERE TOP OF LEAD SHOULDER EXITS PLASTIC BODY AT MOLD PARTING LINE.
2. DIM G1, TRUE POSITION TO BE MEASURED AT DATUM -T-, SEATING PLANE.
3. DIM R AND U DO NOT INCLUDE MOLD FLASH. ALLOWABLE MOLD FLASH IS 0.010 (0.250) PER SIDE.
4. DIMENSIONING AND TOLERANCING PER ANSI Y14.5M, 1982.
5. CONTROLLING DIMENSION: INCH.
6. THE PACKAGE TOP MAY BE SMALLER THAN THE PACKAGE BOTTOM BY UP TO 0.012 (0.300). DIMENSIONS R AND U ARE DETERMINED AT THE OUTERMOST EXTREMES OF THE PLASTIC BODY EXCLUSIVE OF MOLD FLASH, TIE BAR BURRS, GATE BURRS AND INTERLEAD FLASH, BUT INCLUDING ANY MISMATCH BETWEEN THE TOP AND BOTTOM OF THE PLASTIC BODY.
7. DIMENSION H DOES NOT INCLUDE DAMBAR PROTRUSION OR INTRUSION. THE DAMBAR PROTRUSION(S) SHALL NOT CAUSE THE H DIMENSION TO BE GREATER THAN 0.037 (0.940). THE DAMBAR INTRUSION(S) SHALL NOT CAUSE THE H DIMENSION TO BE SMALLER THAN 0.025 (0.635).

	INCHES		MILLIMETERS	
DIM	MIN	MAX	MIN	MAX
A	0.485	0.495	12.32	12.57
B	0.485	0.495	12.32	12.57
C	0.165	0.180	4.20	4.57
E	0.090	0.110	2.29	2.79
F	0.013	0.019	0.33	0.48
G	0.050 BSC		1.27 BSC	
H	0.026	0.032	0.66	0.81
J	0.020	—	0.51	—
K	0.025	—	0.64	—
R	0.450	0.456	11.43	11.58
U	0.450	0.456	11.43	11.58
V	0.042	0.048	1.07	1.21
W	0.042	0.048	1.07	1.21
X	0.042	0.056	1.07	1.42
Y	—	0.020	—	0.50
Z	2°	10°	2°	10°
G1	0.410	0.430	10.42	10.92
K1	0.040	—	1.02	—

How to reach us:
USA/EUROPE/Locations Not Listed: Motorola Literature Distribution;
P.O. Box 20912; Phoenix, Arizona 85036. 1–800–441–2447 or 602–303–5454

MFAX: RMFAX0@email.sps.mot.com – TOUCHTONE 602–244–6609
INTERNET: http://Design–NET.com

JAPAN: Nippon Motorola Ltd.; Tatsumi–SPD–JLDC, 6F Seibu–Butsuryu–Center,
3–14–2 Tatsumi Koto–Ku, Tokyo 135, Japan. 03–81–3521–8315

ASIA/PACIFIC: Motorola Semiconductors H.K. Ltd.; 8B Tai Ping Industrial Park,
51 Ting Kok Road, Tai Po, N.T., Hong Kong. 852–26629298