查询MGF1907A供应商

捷多邦，专业PCB打样工厂，24小时加急出货

MITSUBISHI SEMICONDUCTOR <GaAs FET>

MGF1907A

TAPE CARRIER LOW NOISE GaAs FET

DESCRIPTION

The MGF1907A is a low noise GaAs FET with an N-channel Schottky gate,which is designed for use in S to X band amplifiers and oscillators. The hermetically sealed metal-ceramic package assures minimum parasitic losses, and has a configueation suitable for microstrip circuits. The MGF1907A is mounted in the Super 12 tape, and is electrically equivalent to MGF1302.

FEATURES

- Low Noise Figure
  NFmin. = 4.0dB (MAX.) @ f=12GHz
- High Associated gain
  Gs=5.0dB (MIN.) @ f=12GHz

APPLICATION

S to X band low noise amplifiers and oscillators

QUALITY GRADE

- General Grade (GG)

RECOMMENDED BIAS CONDITIONS

V_{DS}=3V , I_D=10mA

Outline Drawing

Unit : mm

Unit: millimeters (inches)

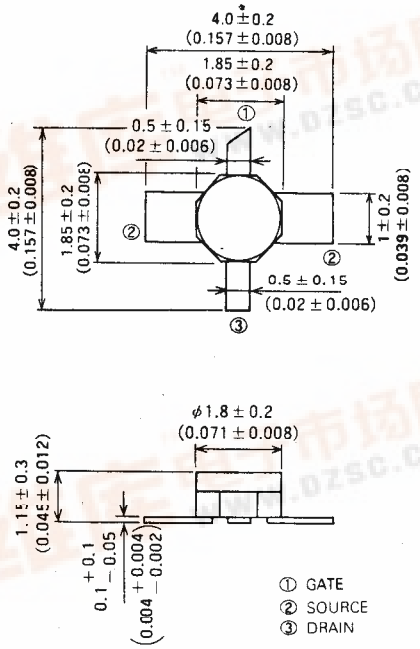

GD-16

ABSOLUTE MAXIMUM RATINGS (Ta=25℃)

Symbol	Parameter	Ratings	Unit
V_{GDO}	Gate to drain voltage	-6	V
V_{GSO}	Gate to source voltage	-6	V
I_D	Drain current	100	mA
PT	Total power dissipation	360	mW
T_{ch}	Channel temperature	175	℃
T_{stg}	Storage temperature	-65～+175	℃

Keep safety first in your circuit designs!

MITSUBISHI ELECTRIC Corporation puts the maximum effort into making semiconductor products better and more reliable , but there is always the possibility that trouble may occur with them. Trouble with semiconductors may lead to personal injury , fire or property damage. Remember to give due consideration to safety when making your circuit designed , with appropriate measure such as (i) placement of substitutive , auxiliary circuits , (ii) use of non-flammable material or (iii) prevention against any malfunction mishap.

ELECTRICAL CHARACTERISTICS (Ta=25℃)

Symbol	Parameter	Test Conditions	Limits			Unit
			Min.	Typ.	Max.	
$V_{(BR)GDO}$	Gate to drain breakdown voltage	I_G=-100μA	-6	--	--	V
$V_{(BR)GSO}$	Gate to source breakdown voltage	I_G=-100μA	-6	--	--	V
I_{GSS}	Gate to source leakage current	V_{GS}=-3V,V_{DS}=0V	--	--	10	μA
I_{DSS}	Saturated drain current	V_{GS}=0V,V_{DS}=3V	30	--	100	mA
$V_{GS(off)}$	Gate to source cut-off voltage	V_{DS}=3V,I_D=100μA	-0.3	--	-3.5	V
gm	Transconductance	V_{DS}=3V,I_D=10mA	25	45	--	mS
Gs	Associated gain	V_{DS}=3V, I_D=10mA	5	--	--	dB
NFmin.	Minimum noise figure	f=12GHz	--	--	4	dB

找PDF 维库一下 pdf.dzsc.com

TYPICAL CHARACTERISTICS

I_D vs. V_{GS}

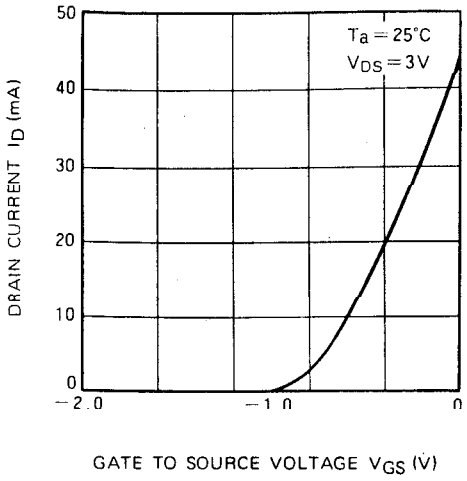

I_D vs. V_{DS}

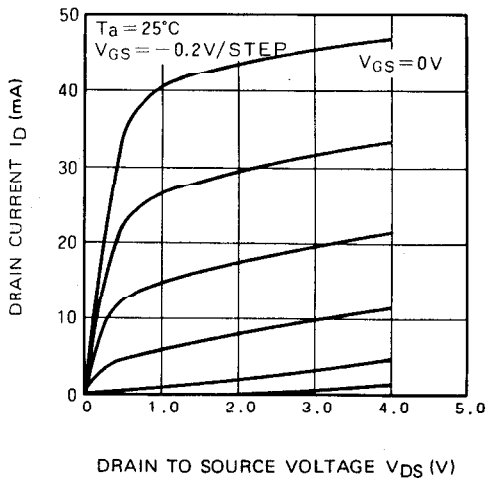

NF & Gs vs. I_D

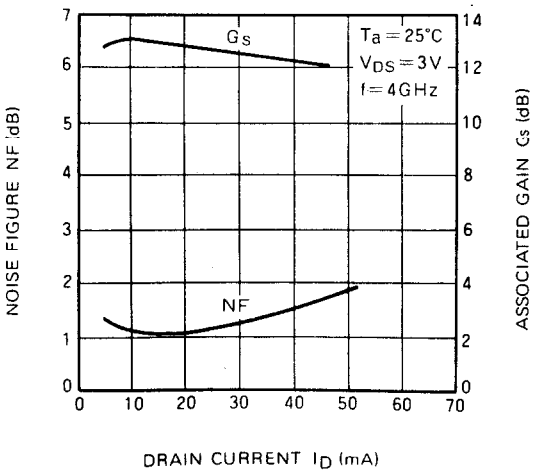

NF_{min} & Gs vs. f

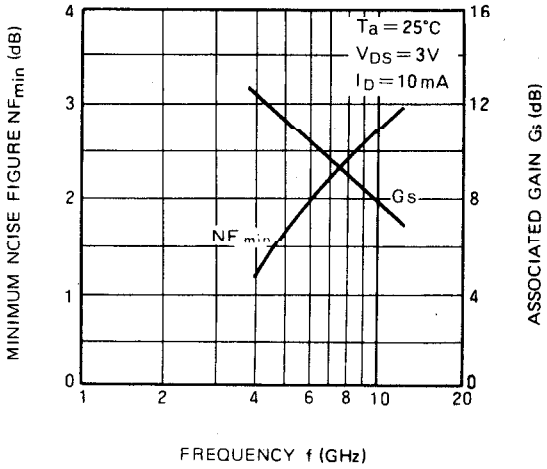

S_{11}, S_{22} vs. f.

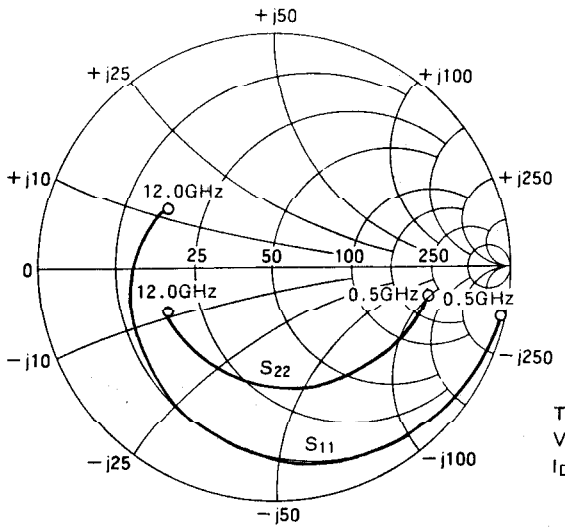

S_{21}, S_{12} vs. f.

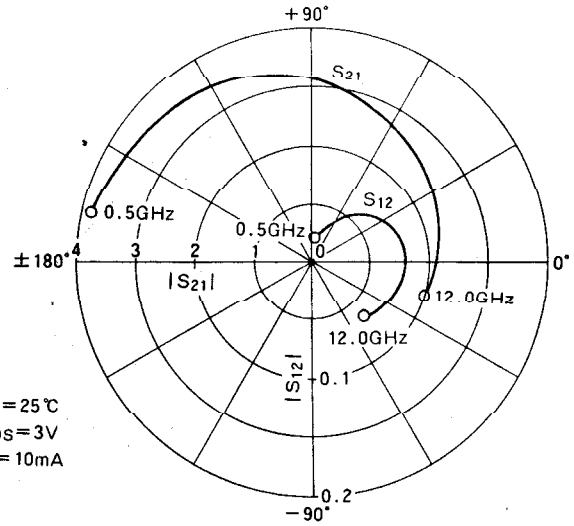

Ta=25℃
V_{DS}=3V
I_D=10mA

S PARAMETERS (Ta=25℃, V_{DS}=3V, I_D=10mA)

Freq. (GHz)	S_{11}		S_{21}		S_{12}		S_{22}		K	MSG/MAG (dB)
	Mag.	Ang.	Mag.	Ang.	Mag.	Ang.	Mag.	Ang.		
0.5	0.997	− 13.3	3.809	167.6	0.019	80.1	0.664	− 10.3	0.042	23.0
1.0	0.975	− 23.1	3.727	158.4	0.026	73.1	0.650	− 17.3	0.180	21.6
1.5	0.952	− 32.8	3.644	149.1	0.033	66.0	0.636	− 24.2	0.271	20.4
2.0	0.929	− 42.5	3.561	139.9	0.040	58.9	0.622	− 31.2	0.341	19.5
2.5	0.906	− 52.2	3.478	130.7	0.047	51.8	0.608	− 38.2	0.398	18.7
3.0	0.884	− 62.0	3.396	121.5	0.054	44.8	0.594	− 45.2	0.449	18.0
3.5	0.861	− 71.7	3.313	112.2	0.061	37.7	0.580	− 52.1	0.494	17.3
4.0	0.838	− 81.4	3.230	103.0	0.068	30.6	0.566	− 59.1	0.537	16.8
4.5	0.811	− 90.9	3.124	94.4	0.071	24.5	0.551	− 66.2	0.604	16.5
5.0	0.783	−100.3	3.018	85.8	0.074	18.5	0.537	− 73.3	0.674	16.1
5.5	0.756	−109.8	2.913	77.2	0.076	12.4	0.522	− 80.3	0.746	15.8
6.0	0.729	−119.2	2.807	68.6	0.079	6.3	0.507	− 87.4	0.822	15.5
6.5	0.709	−127.0	2.710	61.1	0.078	1.1	0.503	− 93.7	0.902	15.4
7.0	0.689	−134.9	2.614	53.5	0.078	− 4.1	0.499	−100.1	0.989	15.3
7.5	0.670	−142.7	2.517	46.0	0.077	− 9.2	0.494	−106.4	1.085	13.4
8.0	0.650	−150.5	2.421	38.4	0.076	−14.4	0.490	−112.7	1.190	12.4
8.5	0.633	−157.6	2.364	31.5	0.075	−18.1	0.487	−118.2	1.271	11.8
9.0	0.617	−164.7	2.308	24.5	0.074	−21.9	0.485	−123.7	1.357	11.3
9.5	0.600	−171.8	2.251	17.6	0.074	−25.6	0.482	−129.2	1.449	10.9
10.0	0.584	−178.9	2.194	10.6	0.073	−29.3	0.479	−134.7	1.547	10.4
10.5	0.568	173.3	2.149	3.4	0.072	−33.9	0.483	−140.1	1.641	10.1
11.0	0.551	165.5	2.103	− 3.9	0.071	−38.4	0.487	−145.5	1.739	9.7
11.5	0.535	157.7	2.058	−11.1	0.069	−43.0	0.491	−150.8	1.844	9.4
12.0	0.519	149.9	2.012	−18.3	0.068	−47.5	0.495	−156.2	1.954	9.1

MGF1907A

TAPE CARRIER LOW NOISE GaAs FET

S_{11}, S_{22} vs. f.

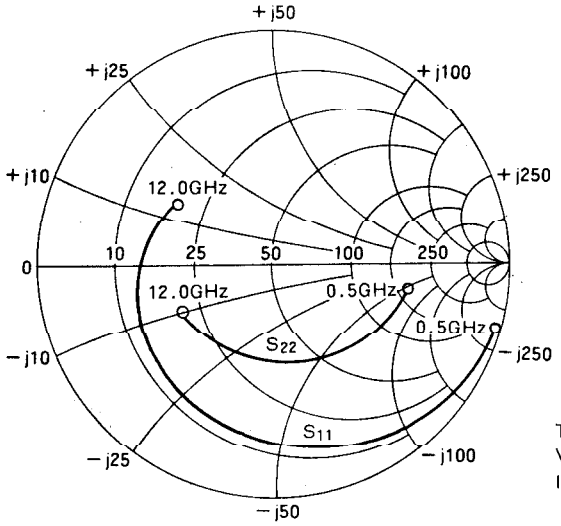

S_{21}, S_{12} vs. f.

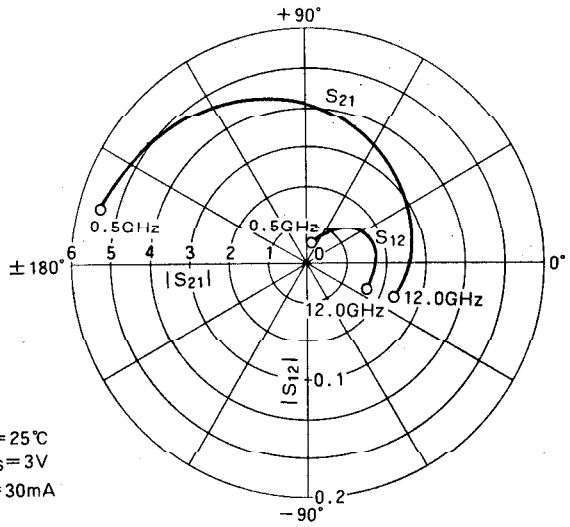

Ta=25℃
V_{DS}=3V
I_D=30mA

S PARAMETERS (Ta=25℃, V_{DS}=3V, I_D=30mA)

Freq. (GHz)	S_{11}		S_{21}		S_{12}		S_{22}		K	MSG/MAG (dB)
	Mag.	Ang.	Mag.	Ang.	Mag.	Ang.	Mag.	Ang.		
0.5	0.995	− 16.4	5.393	164.9	0.017	78.7	0.579	− 11.4	0.067	25.0
1.0	0.966	− 27.1	5.224	155.4	0.022	72.1	0.564	− 18.3	0.233	23.8
1.5	0.936	− 37.7	5.056	145.8	0.027	65.4	0.549	− 25.1	0.350	22.7
2.0	0.906	− 48.3	4.888	136.3	0.032	58.8	0.534	− 32.0	0.442	21.8
2.5	0.876	− 48.9	4.720	126.8	0.037	52.2	0.519	− 38.9	0.520	21.1
3.0	0.847	− 69.6	7.552	117.3	0.042	45.6	0.504	− 45.8	0.589	20.3
3.5	0.817	− 80.2	4.383	107.7	0.047	38.9	0.489	− 52.6	0.652	19.7
4.0	0.787	− 90.8	4.215	98.2	0.052	32.3	0.474	− 59.5	0.713	19.1
4.5	0.758	−100.6	4.040	89.7	0.054	27.5	0.461	− 66.2	0.800	18.8
5.0	0.729	−110.3	3.865	81.2	0.055	22.6	0.447	− 72.9	0.893	18.5
5.5	0.700	−120.1	3.690	72.7	0.056	17.8	0.433	− 79.6	0.993	18.2
6.0	0.671	−129.8	3.515	64.2	0.058	12.9	0.420	− 86.3	1.101	15.9
6.5	0.652	−137.9	3.378	56.8	0.058	9.4	0.418	− 92.5	1.188	15.0
7.0	0.632	−146.0	3.241	49.5	0.058	5.9	0.417	− 98.7	1.282	14.3
7.5	0.612	−154.0	3.103	42.1	0.058	2.3	0.416	−104.9	1.386	13.6
8.0	0.593	−162.1	2.966	34.7	0.058	− 1.2	0.414	−111.1	1.501	12.9
8.5	0.577	−177.0	2.883	27.8	0.057	− 3.4	0.414	−116.3	1.596	12.5
9.0	0.561	175.6	2.799	20.9	0.057	− 5.5	0.413	121.5	1.690	12.0
9.5	0.545	168.1	2.716	14.0	0.057	− 7.7	0.413	−126.7	1.810	11.6
10.0	0.529	160.3	2.633	7.1	0.056	− 9.8	0.413	−131.9	1.929	11.2
10.5	0.515	152.4	2.571	0.2	0.056	−12.9	0.419	−137.0	1.998	10.9
11.0	0.502	144.6	2.508	− 6.8	0.056	−16.0	0.426	−142.1	2.070	10.6
11.5	0.488	136.7	2.446	−13.7	0.056	−19.0	0.433	−147.1	2.145	10.3
12.0	0.475	147.5	2.384	−20.6	0.056	−22.1	0.439	−152.2	2.223	10.1

NOISE PARAMETERS (V_{DS}=3V, I_D=10mA)

Freq. (GHz)	Γopt.		Rn (Ω)	NFmin. (dB)
	Mang.	Angle (deg.)		
1	0.747	5.6	25.7	0.77
2	0.683	22.4	26.3	0.82
3	0.638	42.2	26.9	0.89
4	0.595	63.5	27.5	0.96
5	0.562	80.2	28.1	1.19
6	0.530	97.9	28.7	1.41
7	0.503	115.2	28.3	1.63
8	0.475	134.5	30.0	1.85
9	0.450	150.7	26.3	2.08
10	0.430	167.2	22.6	2.30
11	0.408	−174.5	18.8	2.53
12	0.385	−155.3	15.0	2.76

Glp and P1dB (Ta=25℃, V_D=3V)

	f=4GHz		f=12GHz	
	I_D=10mA	I_D=30mA	I_D=10mA	I_D=30mA
G_{LP} (dB)	15.5	16.8	9.6	10.5
P_{1dB} (dBm)	12.6	14.5	10.5	12.7

Requests Regarding Safety Designs

Mitsubishi Electric constantly strives to raise the level of its quality and reliability. Despite these concerted efforts, however, there will be occasions when our semiconductor products suffer breakdowns, malfunctions or other problems. In view of this reality, it is requested that every feasible precaution be taken in the pursuit of redundancy design, malfunction prevention design and other safety-related designs, to prevent breakdowns or malfunctions in our products from resulting in accidents involving people, fires, social losses or other problems, thereby upholding the highest levels of safety in the products when in use by customers.

Matters of Importance when Using these Materials

1. These materials are designed as reference materials to ensure that all customers purchase Mitsubishi Electric semiconductors best suited to their specific use applications. Please be aware, however, that the technical information contained in these materials does not comprise consent for the execution or use of intellectual property rights or other rights owned by Mitsubishi Electric Corporation.
2. Mitsubishi Electric does not assume responsibility for damages resulting from the use of product data, graphs, charts, programs, algorithms or other applied circuit examples described in these materials, or for the infringement of the rights of third-party owners resulting from such use.
3. The data, graphs, charts, programs, algorithms and all other information described in these materials were current at the issue of these materials, with Mitsubishi Electric reserving the right to make any necessary updates or changes in the products or specifications in these materials without prior notice. Before purchasing Mitsubishi Electric semiconductor products, therefore, please obtain the latest available information from Mitsubishi Electric directly or an authorized dealer.
4. Every possible effort has been made to ensure that the information described in these materials is fully accurate. However, Mitsubishi Electric assumes no responsibility for damages resulting from inaccuracies occurring within these materials.
5. When using the product data, technical contents indicated on the graphs, charts, programs or algorithms described in these materials, assessments should not be limited to only the technical contents, programs and algorithm units. Rather, it is requested that ample evaluations be made of each individual system as a whole, with the customer assuming full responsibility for decisions on the propriety of application. Mitsubishi Electric does not accept responsibility for the propriety of application.
6. The products described in these materials, with the exception of special mention concerning use and reliability, have been designed and manufactured with the purpose of use in general electronic machinery. Accordingly these products have not been designed and manufactured with the purpose of application in machinery or systems that will be used under conditions that can affect human life, or in machinery or systems used in social infrastructure that demand a particularly high degree of reliability. When considering the use of the products described in these materials in transportation machinery (automobiles, trains, vessels), for objectives related to medical treatment, aerospace, nuclear power control, submarine repeaters or systems or other specialized applications, please consult with Mitsubishi Electric directly or an authorized dealer.
7. When considering use of products for purposes other than the specific applications described in these materials, please inquire at Mitsubishi Electric or an authorized dealer.
8. The prior consent of Mitsubishi Electric in writing is required for any reprinting or reproduction of these materials.
9. Please direct any inquiries regarding further details of these materials, or any other comments or matters of attention, to Mitsubishi Electric or an authorized dealer.