查询MH88524供应商 捷多邦，专业PCB打样工厂，24小时加急出货

MH88524

Dual 2-4 Wire Circuit

Preliminary Information

ISSUE 4 April 1995

Features

- Full duplex operation
- Two complete circuits per package
- Transformerless 2-4 Wire (4-2 Wire) conversion
- ± 5V operation
- Wide bandwidth (50kHz)
- Small Package Size

Ordering Information

MH88524 10 Pin SIL Package

0°C to 70°C

Applications

4-2 Wire and 2-4 Wire conversion for:

- MH88630/631, MH88632, MH88500 & MT8840
- PBX
- Key Telephone System
- Channel bank
- Voice Mail
- Terminal Equipment
- Digital Loop Carrier
- Modem
- Intercom

Description

The Mitel MH88524 (Dual 2-4 wire Circuit) provides two independent interfaces between4-Wire devices such as the MH88631 COIC (Central Office Interface CIrcuit) and a speech switch such as the MT8814 (Analog Switch Array), requiring only a single bidirectional switch per crosspoint. The MH88524 can accommodate two full duplex audio links. The device is fabricated as a thick film hybrid which incorporates various technologies for optimum circuit design and very high reliability.

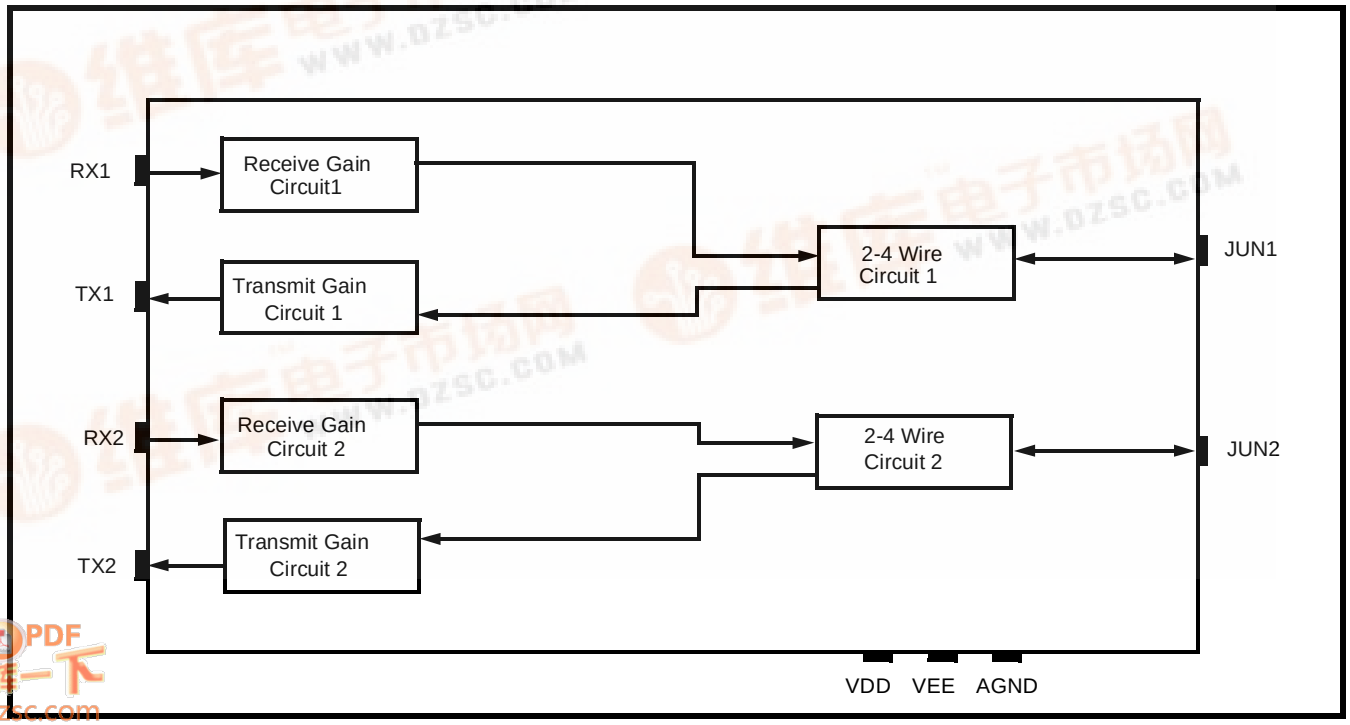

Figure 1 - Functional Block Diagram

找PDF 维库一下 pdf.dzsc.com

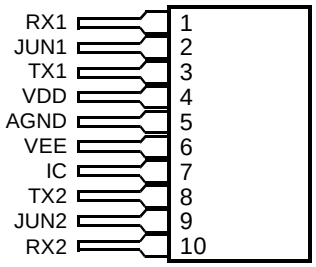

Figure 2 - Pin Connections

Pin Description

Pin #	Name	Description
1	RX1	**Receive 1 (Input).** 4-Wire ground (AGND) referenced audio output.
2	JUN1	**Junctor 1 (Transmit and Receive)**. Ground referenced transmit and receive speech path.
3	TX1	**Transmit 1.** 4-Wire ground (AGND) referenced audio output.
4	VDD	**Positive Supply Voltage.** Typically +5V.
5	AGND	**Analog Ground.** 2-Wire and 4-Wire ground. Normally connected to System Ground.
6	VEE	**Negative Supply Voltage.** Typically -5V.
7	IC	**Internal Connection**. This pin is internally connected.
8	TX2	**Transmit 2 (Output).** 4-Wire ground AGND) referenced audio output.
9	JUN2	**Junctor 2 (Transmit and Receive)**. Ground referenced transmit and receive speech path.
10	RX2	**Receive 2 (Input).** 4-Wire ground (AGND) referenced audio output.

Absolute Maximum Ratings*

	Parameter	Sym	Min	Max	Units	Comments
1	DC Supply Voltage	V_{DD} V_{EE}	-0.3 +0.3	15 -15	V V	With respect LGND
2	Storage Temperature	T_S	-55	125	°C	

* Exceeding these values may cause permanent damage. Functional operation under these conditions is not implied.

Recommended Operating Conditions

	Parameter	Sym	Typ*	Min	Max	Units	Comments
1	DC Supply Voltage	V_{DD} V_{EE}	5.0 -5.0	4.75 -4.75	10 -10	V V	
2	Operating Temperature	T_{OP}		0	70	°C	

* Typical figures are at 25°C with nominal ±5V supplies and are for design aid only.

DC Electrical Characteristics ‡

	Characteristics	Sym	Min	Typ*	Max	Units	Test Conditions
1	Supply Current	I_{DD} P_{EE}			4 4	mA	V_{DD} = +5.0 V_{EE} = 5.0
2	Power Dissipation	PC			40	mW	V_{DD} = +5.0 V_{EE} = 5.0

‡ DC Electrical Characteristics are over recommended operating conditions unless otherwise stated.
* Typical figures are at 25°C with nominal ±5V supplies and are for design aid only.

AC Electrical Interdependence Characteristics‡

	Characteristics	Sym	Min	Typ*	Max	Units	Test Conditions
1	Cross, Circuit 1 or 2						Input 1.0V
	JUN1 to JUN2		80			dB	200Hz-3400Hz
	JUN1 to TX2		80			dB	
	RX1 to JUN2		80			dB	
	RX1 to TX2		80			dB	
	JUN1 to JUN2		60				200Hz-50kHz
	JUN1 to TX2		60			dB	
	RX1 to JUN2		60			dB	
	RX1 to TX2		60			dB	
						dB	
2	Crosstalk, Circuit 1 or 2						Input 1.0V
	JUN1 to JUN2		80			dB	200Hz-3400Hz
	JUN1 to TX2		80			dB	
	RX1 to JUN2		80			dB	
	RX1 to TX2		80			dB	
	JUN1 to JUN2		60			dB	200Hz-50kHz
	JUN1 to TX2		60			dB	
	RX1 to JUN2		60			dB	
	RX1 to TX2		60			dB	

‡ AC Electrical Characteristics are over recommended operating conditions unless otherwise stated.
* Typical figures are at 25°C with nominal ±5V supplies and are for design aid only.

AC Electrical Characteristics ‡

	Characteristics	Sym	Min	Typ*	Max	Units	Test Conditions
1	Return Loss at junctor① (Ref. = 604Ω)		46 40			dB dB	200-3400Hz 200-50kHz
2	Impedance at Junctor			604		Ω	
3	Transhybrid Loss② (Junctor - 754Ω)		42 36			dB dB	200-3400Hz 200-50kHz
4	Transhybrid Loss ③ (Frequency = 1kHz)		18 21			dB dB	Junctor = 600Ω Junctor = 900Ω
5	Transhybrid Loss (Frequency = 50kHz)		15 18			dB dB	Junctor = 600Ω Junctor = 900Ω
6	Input Impedance at RX		10k			Ω	
7	Output Impedance at TX				5	Ω	
8	Gain RX to Junctor	ARJ	0.99 -0.1	1.00 0.0	1.01 0.1	V/V dBV	Input 0.5V 1kHz
9	Frequency Response Gain (relative to gain at 1kHz)		-0.1 -0.1		0.1 1.0	dB dB	200-3400Hz 200-50kHz
10	Gain junctor to TX	AJT	0.99 -0.1	1.00 0	1.01 0.1	V/V dBV	Input 0.5V 1kHz
11	Frequency Response Gain relative to gain at 1kHz		-0.1 -0.1		0.1 0.1	dB dB	200-3400Hz 200Hz-50kHz
12	Signal Output Overload Level at TX at Junctor		 6.0 6.0			dBm dBm	%THD<5% Reference: 600Ω Reference: 754Ω
13	Total Harmonic Distortion RX to Junctor Junctor to TX RX to Junctor Junctor to TX	THD			 0.4 0.4 1.0 1.0	 % % % %	Input 0.5V 1kHz 200-3400Hz 200-3400Hz 200-50kHz 200-50kHz
14	Idle Channel Noise at TX at Junctor	Nc			 2 2	 dBrnC dBrnC	 Reference: 600Ω Reference 754Ω
15	Power Supply Rejection Ratio at TX and Junctor V_{DD} V_{EE}	PSRR	 40 40			 dB dB	Ripple 0.1V 1kHz

* Typical figure are at 25°C with nominal ±5V supplies and are for design aid only.
‡ AC Electrical Characteristics are over recommended operating conditions unless otherwise stated.
Both of the 2-4 Wire circuits are tested. TX, RX and Junctor actually refer to TX1, RX1 and JUN1; and TX2, RX2 and JUN2.
All of the above test conditions use 754Ω connected between Junctor and AGND, unless otherwise stated.
All the above test conditions use 200Hz to 3400Hz unless otherwise stated.
Notes:
① RX is connected to AGND, see Figure 3.
② See Figure 5.
③ See Figure 4.

Functional Description

The MH88524 is a Dual 2-4 Wire Circuit used to interface between ground reference 2-Wire circuitry and ground referenced 4-Wire circuitry. The device can accommodate two full duplex audio links.

Hybrid

The 2-4 Wire hybrid circuit separates the ground reference full duplex signal at JUNi (where i=1 or 2) of the switched line into receive and transmit ground referenced signals the RXi (Receive) and TXi (Transmit). The hybrid also prevents the input signal at RXi from appearing at TXi. The degree to which the hybrid minimises the contribution to the RXi signal at the TXi output is specified as transhybrid loss. For maximising transhybrid loss, see the Transhybrid Loss section.

The 4-Wire side can be interfaces to a COIC such as the MH88631 for use in analog voice switched systems; or a filter/codec, such as the Mitel MT896X, for use in digital voice switched systems.

The 2-wire side can be interfaces to a crosspoint switch such as the MT8816 or a junctor SLIC such as the MH88510 for use in analog voice switched systems.

Return Loss at Junctor

The MH88524's Junctor impedance (Zin) is fixed at 604Ω nominal when RXi and TXi in a feedback loop as shown in Figure 6, the JUNi impedance will change, see Return Loss with Interface Circuit.

Return Loss with Interface Circuit

To maximise return loss at Tip-Ring of the Interface Circuit, the termination impedance at Tip-Ring of the Interface Circuit (COIC or SLIC) should match the Interface Circuit's input impedance (600Ω, 900Ω or complex). However, with the inclusion of the MH88524, the interface circuit's input impedance is dependent on the JUNi termination resistance. For optimum return loss the JUNi should be terminated with 754Ω.

Figure 6, shows, illustrates a typical connection between an Interface Circuit (MH88631) and the MH88524. Note how the return loss occurs when JUNi is terminated with 754Ω.

Figure 8 illustrates a typical connection between two interface circuits (MH88631), through an MH88524 and two crosspoint switches. Optimum return loss occurs when JUNi is terminated with 754Ω. Since the JUNi input/output impedance is 604Ω, the MH88510 JUNC input/output impedance is 604Ω, and the crosspoint switches resistance are 75W + 75Ω, this configuration gives optimum return loss.

Transhybrid Loss

THL = log (VRX/VTX)

Transhybrid loss is maximised when the JUNi termination impedance is 754W. In addition, good transhybrid loss is indicated in Figure 4 and AC Electrical Characteristics.

Fixed Transmit and Receive Gain

Transmit Gain (JUNi to TXi, TXi/JUNi) and receive Gain (RXi to JUNi, JUNi/RXi) are both fixed at 0dBV providing the MH88524 JUNi impedance is 754Ω.

Application with MT8840, MH88500 and MH88524

Figure 11 illustrates an application for the MH88524's wide bandwidth. The MT8840 requires a 2-4 Wire converter which has good transhybrid loss at 32kHz. Since the MH88524 operates to 50kHz, it is ideal for this application. In addition, if a SLIC (Subscriber Line Interface Circuit) is required, the MH88500 can also be used since it also has a 604Ω Junctor and a wide bandwidth.

Mechanical Data See Figure 12.

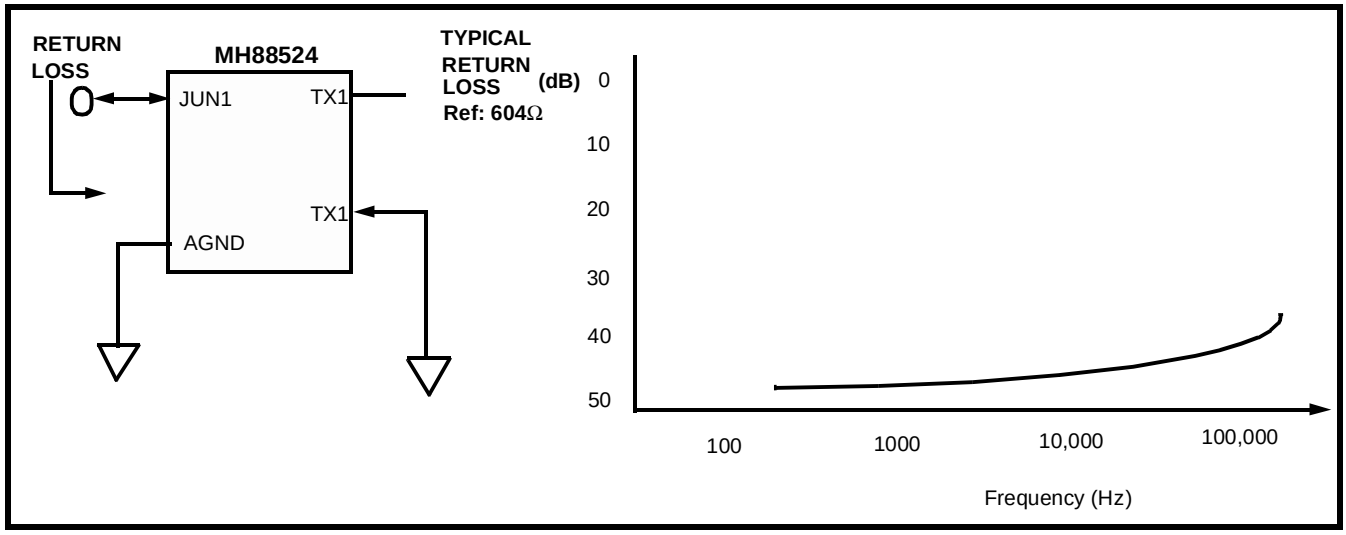

Figure 3 - Return Loss at Junctor vs Frequency with MH88524

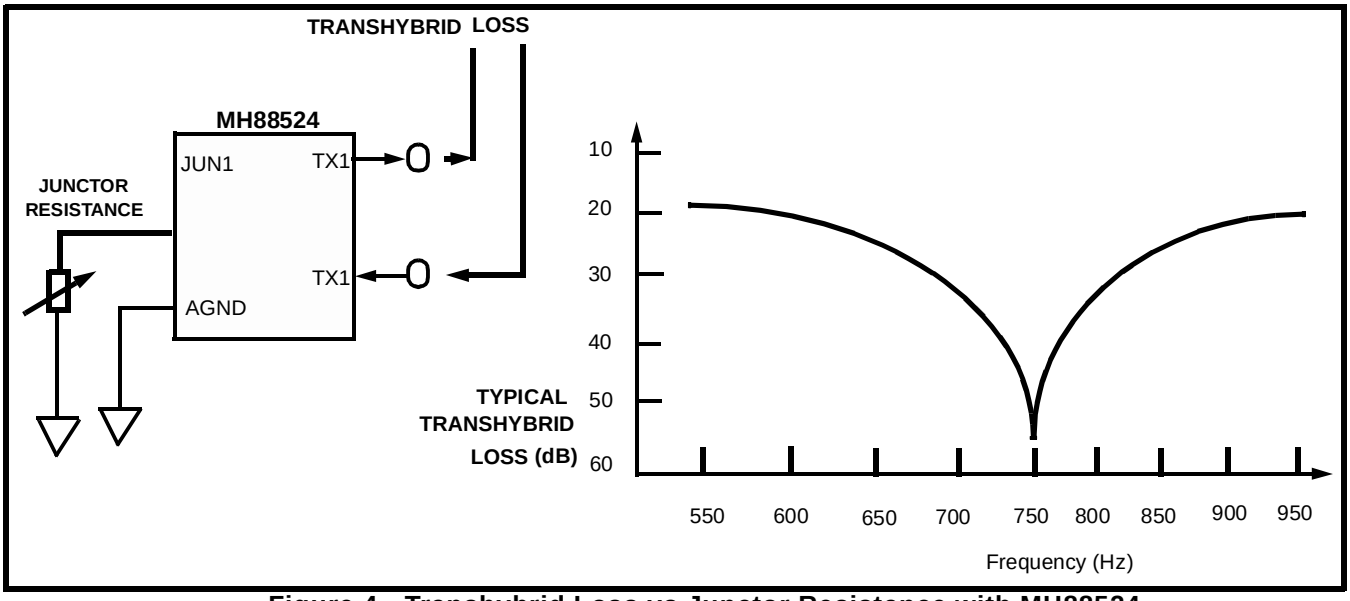

Figure 4 - Transhybrid Loss vs Junctor Resistance with MH88524

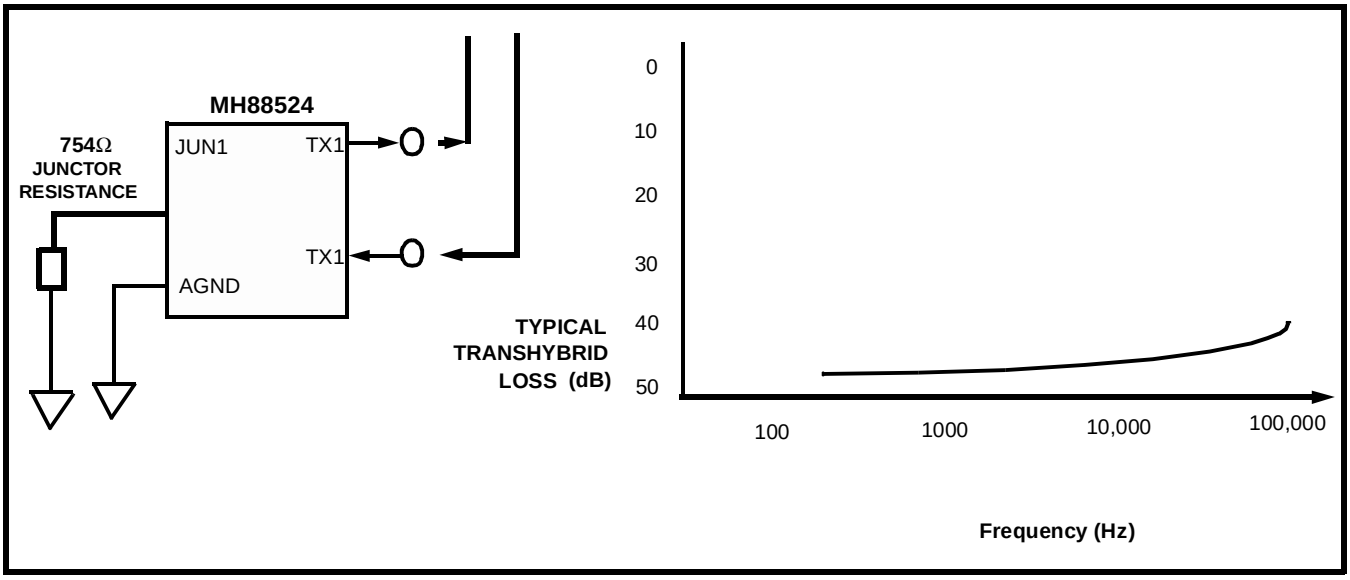

Figure 5 - Transhybrid Loss vs Frequency with MH88524

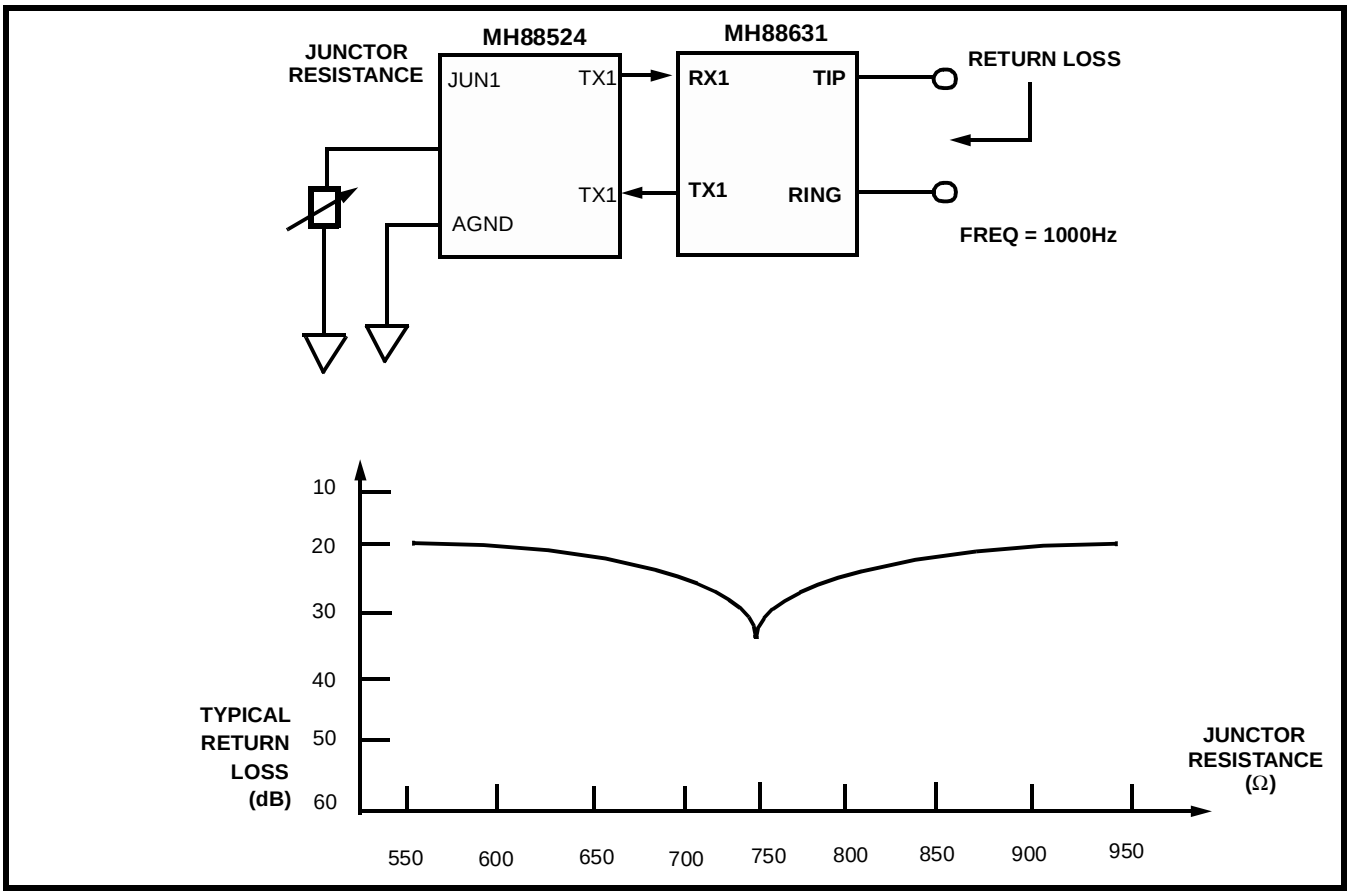

Figure 6 - Return Loss vs Junctor Resistance with MH88631 and MH88524

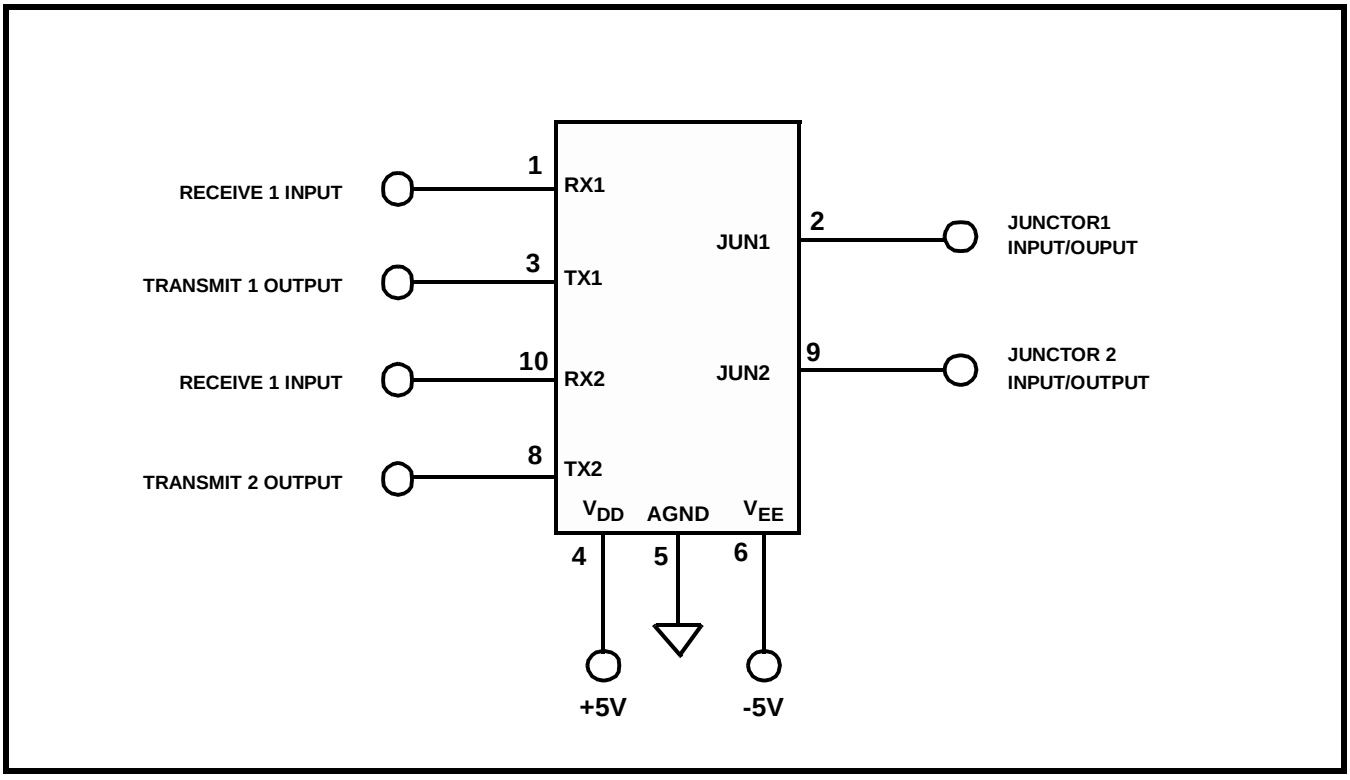

Figure 7 - MH88524 Application Circuit

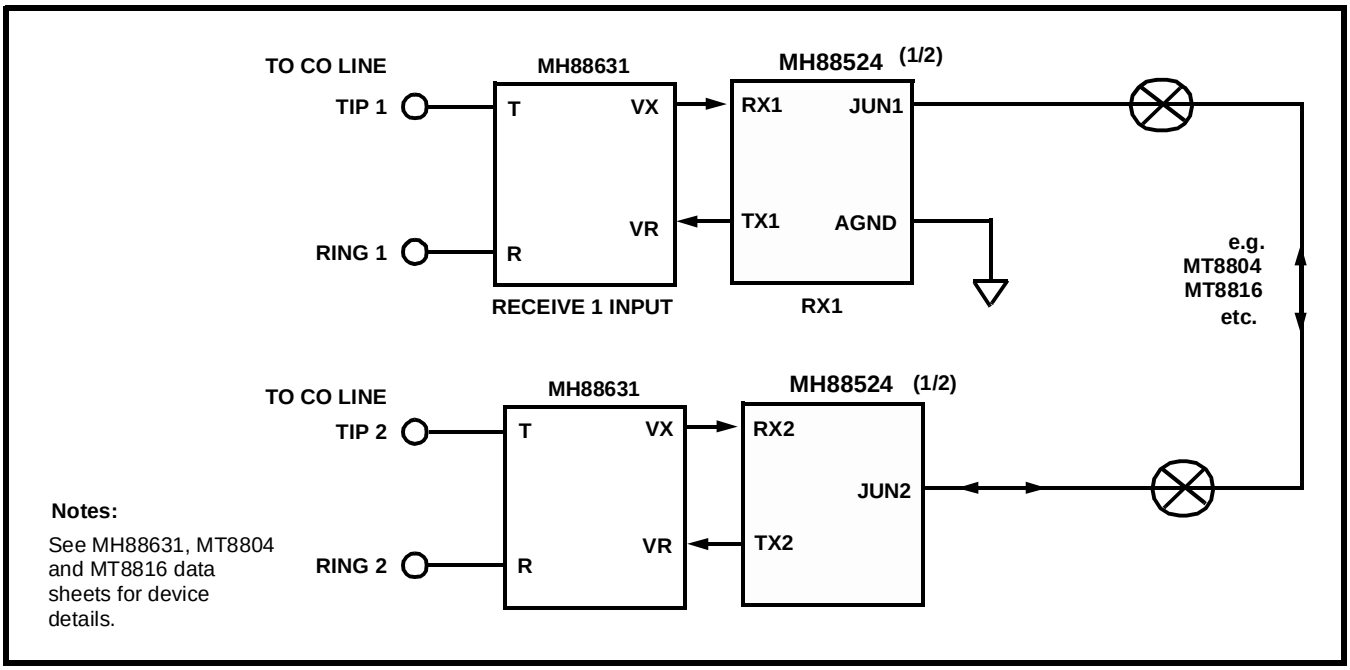

Figure 8 - Application Circuit with MH88631, Crosspoint Switch and MH88524

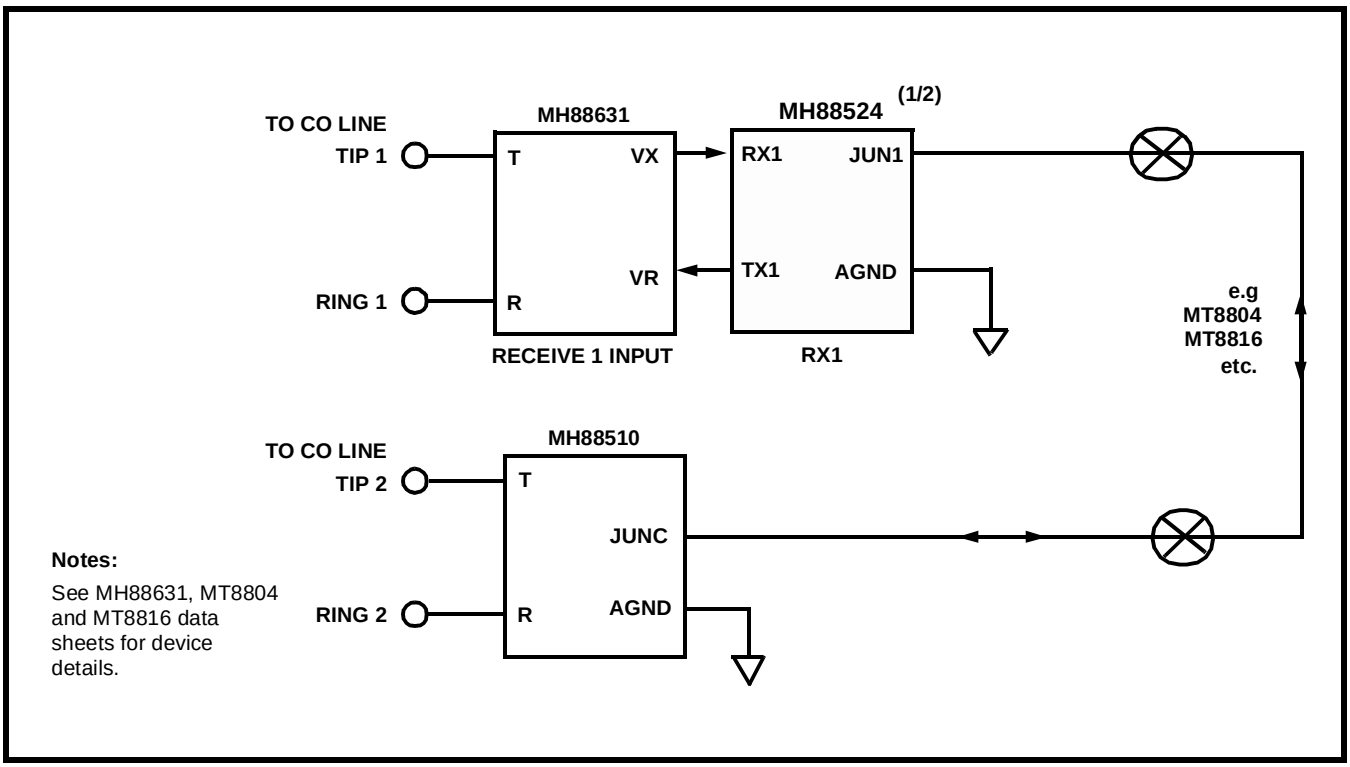

Figure 9 - Application Circuit with MH88631, MH88510, Crosspoint Switch and MH88524

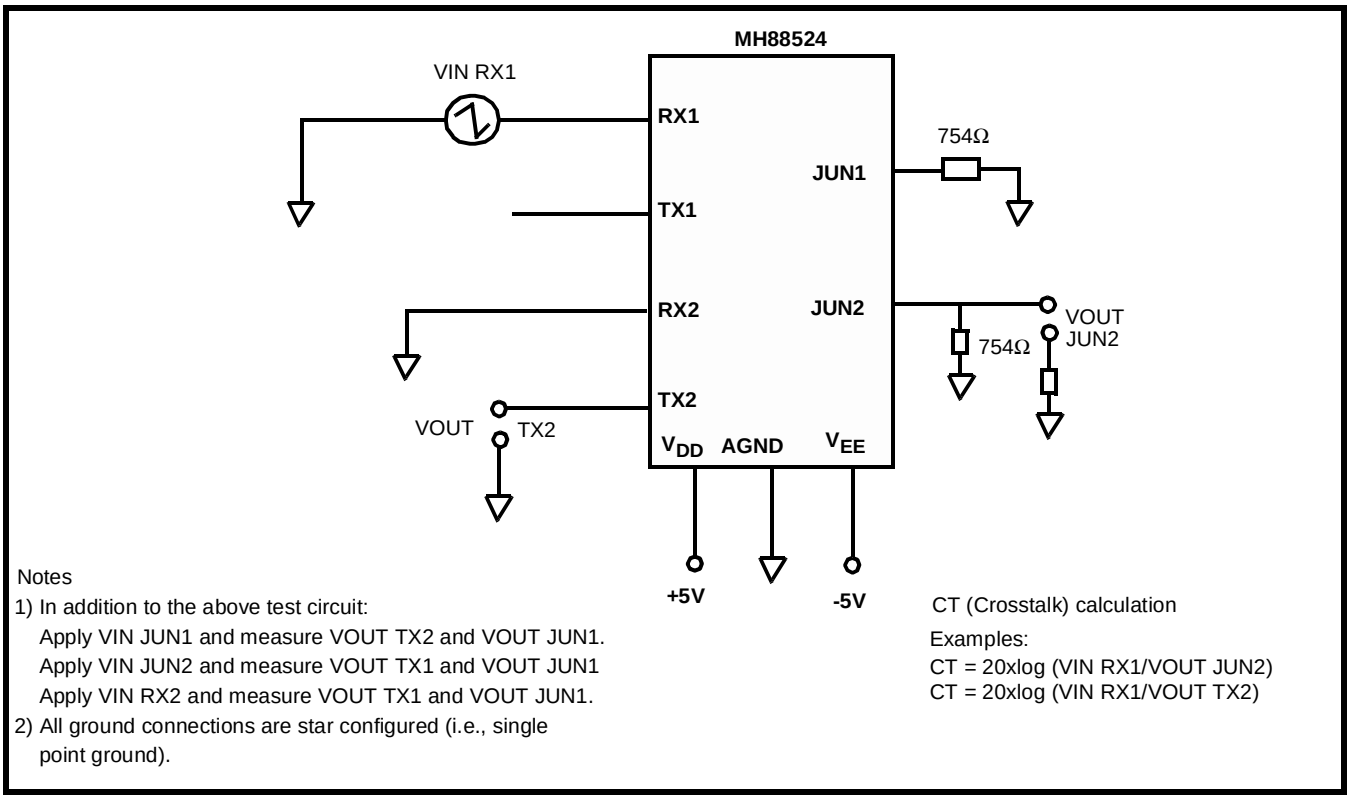

Figure 10 - Application Circuit for Crosstalk Test

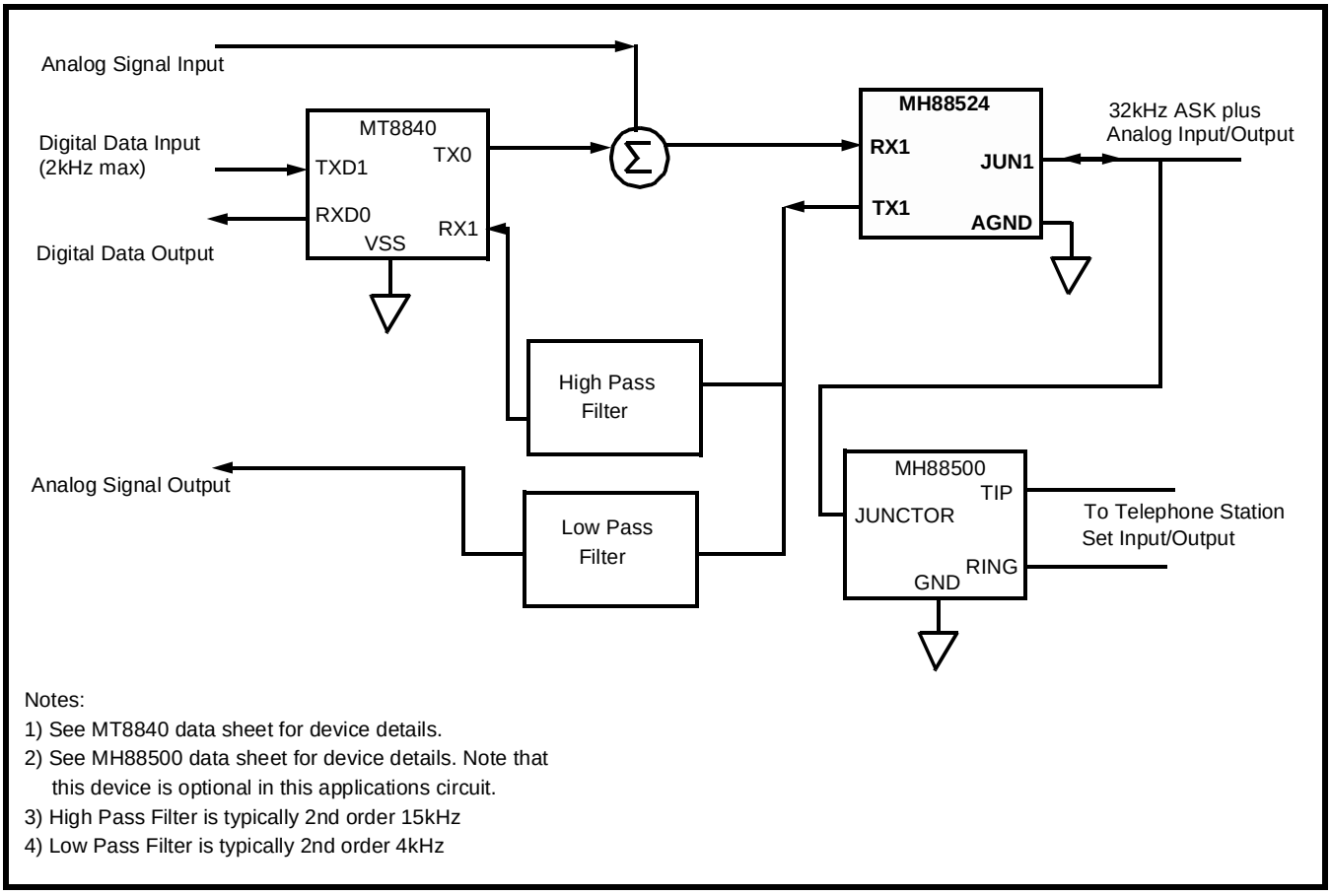

Figure 11 - Application Circuit with MT8840, MH88500 and MH88524

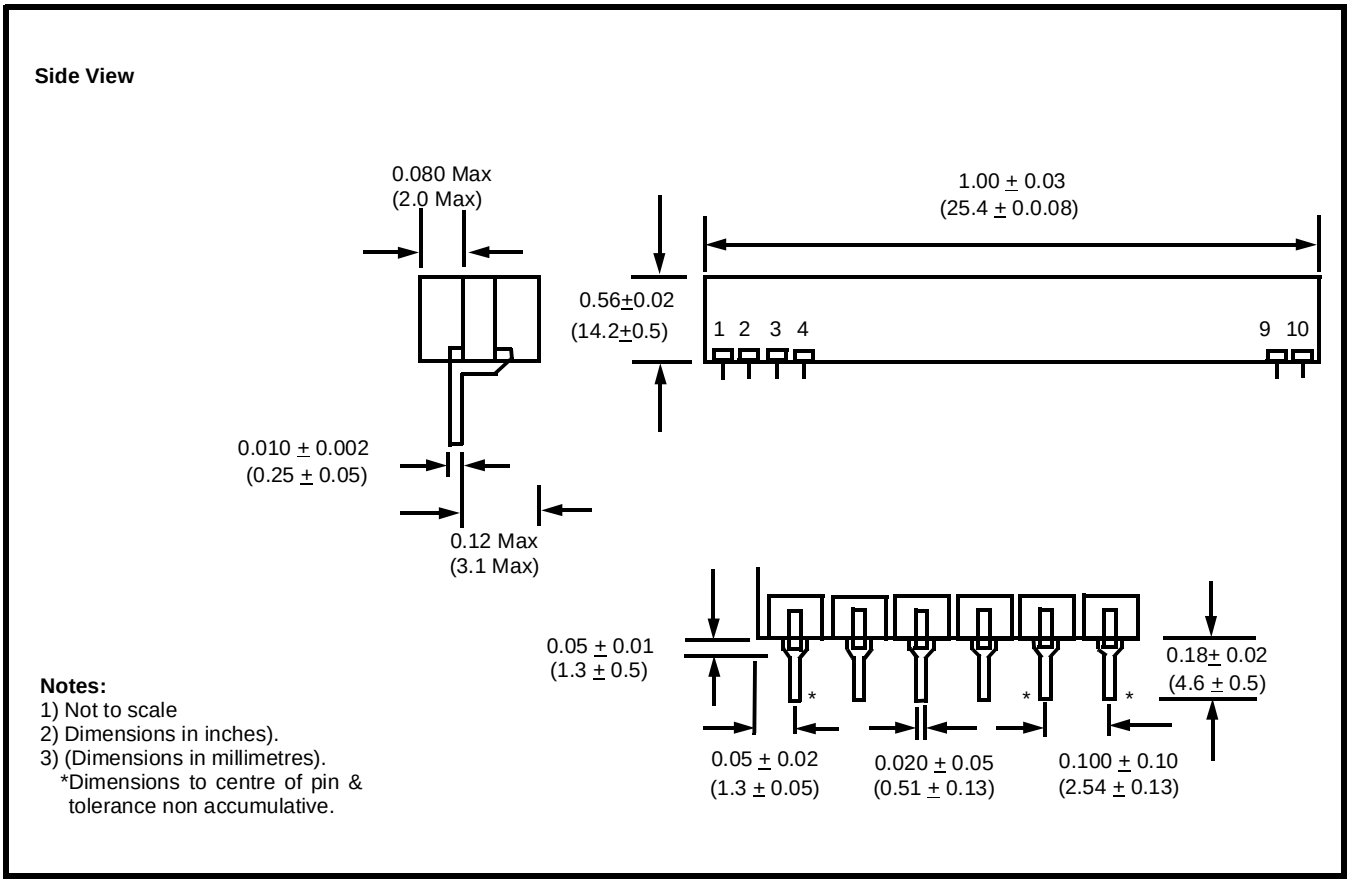

Figure 12 - Mechanical Data