查询MIE-324A4供应商 捷多邦，专业PCB打样工厂，24小时加急出货

AlGaAs/GaAs HIGH POWER T-1 PACKAGE INFRARED EMITTING DIODE

MIE-324A4

Description

The MIE-324A4 is a high power infrared eimtting diode in GaAs technology with AlGaAs window coating molded in water clear plastic package.

Package Dimensions

Unit : mm (inches)

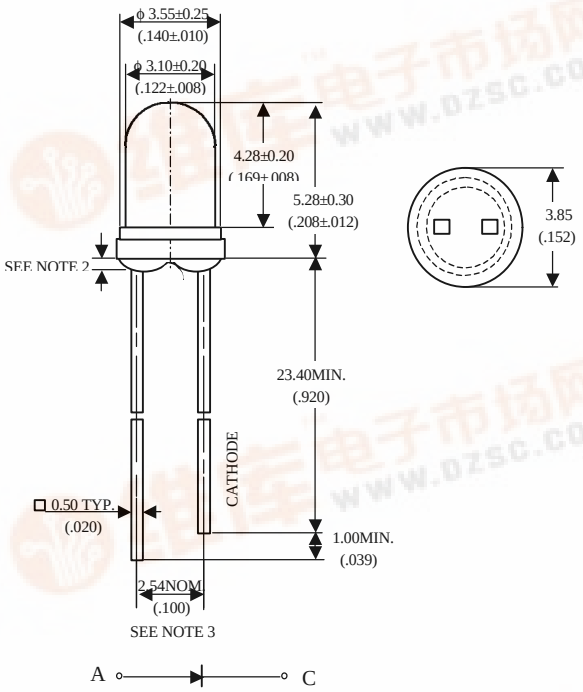

Notes :
1. Tolerance is ± 0.25 mm (.010") unless otherwise noted.
2. Protruded resin under flange is 1.5 mm (.059") max.
3. Lead spacing is measured where the leads emerge from the package.

Features

- High radiant power and high radiant intensity
- Suitable ror DC and high pulse current operation
- Standard T-1 (ϕ 3mm) package, radiation angle: 40°
- Peak wavelength λp = 940 nm
- Good spectral matching to si-photodetector

Absolute Maximum Ratings

@ T_A=25°C

Parameter	Maximum Rating	Unit
Power Dissipation	120	mW
Peak Forward Current(300pps,10μs pulse)	1	A
Continuos Forward Current	100	mA
Reverse Voltage	5	V
Operating Temperature Range	-55°C to +100°C	
Storage Temperature Range	-55°C to +100°C	
Lead Soldering Temperature	260°C for 5 seconds	

pdf.dzsc.com

Optical-Electrical Characteristics

@ T_A=25°C

Parameter	Test Conditions	Symbol	Min.	Typ .	Max.	Unit
Radiant Intensity	I_F=20mA	Ie		1.6		mW/sr
Forward Voltage	I_F=50mA	V_F		1.3	1.5	V
Reverse Current	V_R=5V	I_R			100	μA
Peak Wavelength	I_F=20mA	λp		940		nm
Spectral Bandwidth	I_F=20mA	Δλ		50		nm
View Angle	I_F=20mA	$2\theta_{1/2}$		40		deg .

Typical Optical-Electrical Characteristic Curves

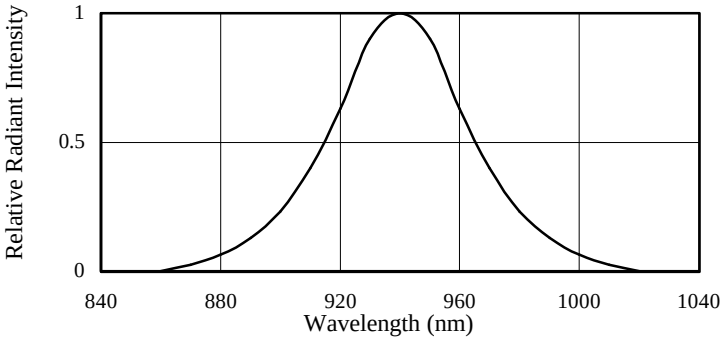

FIG.1 SPECTRAL DISTRIBUTION

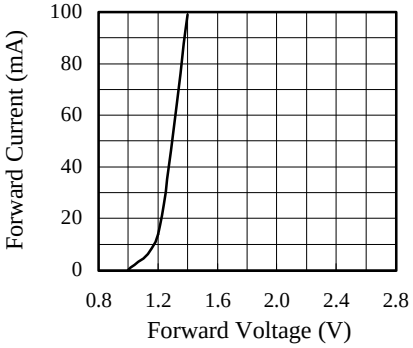

FIG.2 FORWARD CURRENT VS. FORWARD VOLTAGE

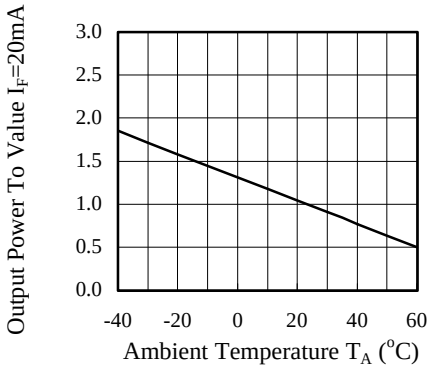

FIG.3 RELATIVE RADIANT INTENSITY VS.AMBIENT TEMPERATURE

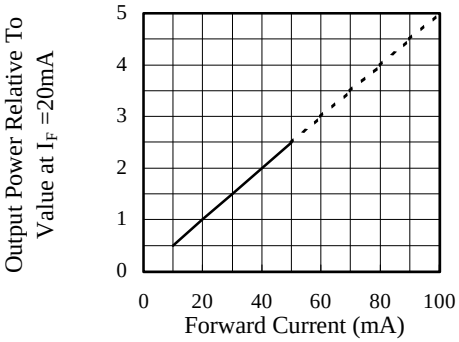

FIG.4 RELATIVE RADIANT INTENSITY VS. FORWARD CURRENT

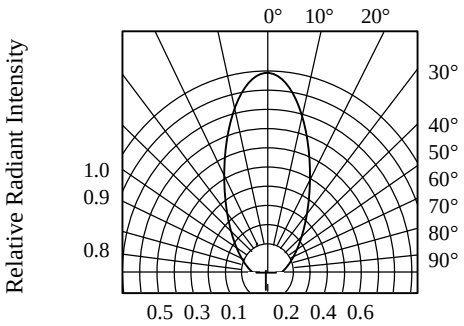

FIG.5 RADIATION DIAGRAM