查询MSM5105供应商 捷多邦，专业PCB打样工厂，24小时加急出货

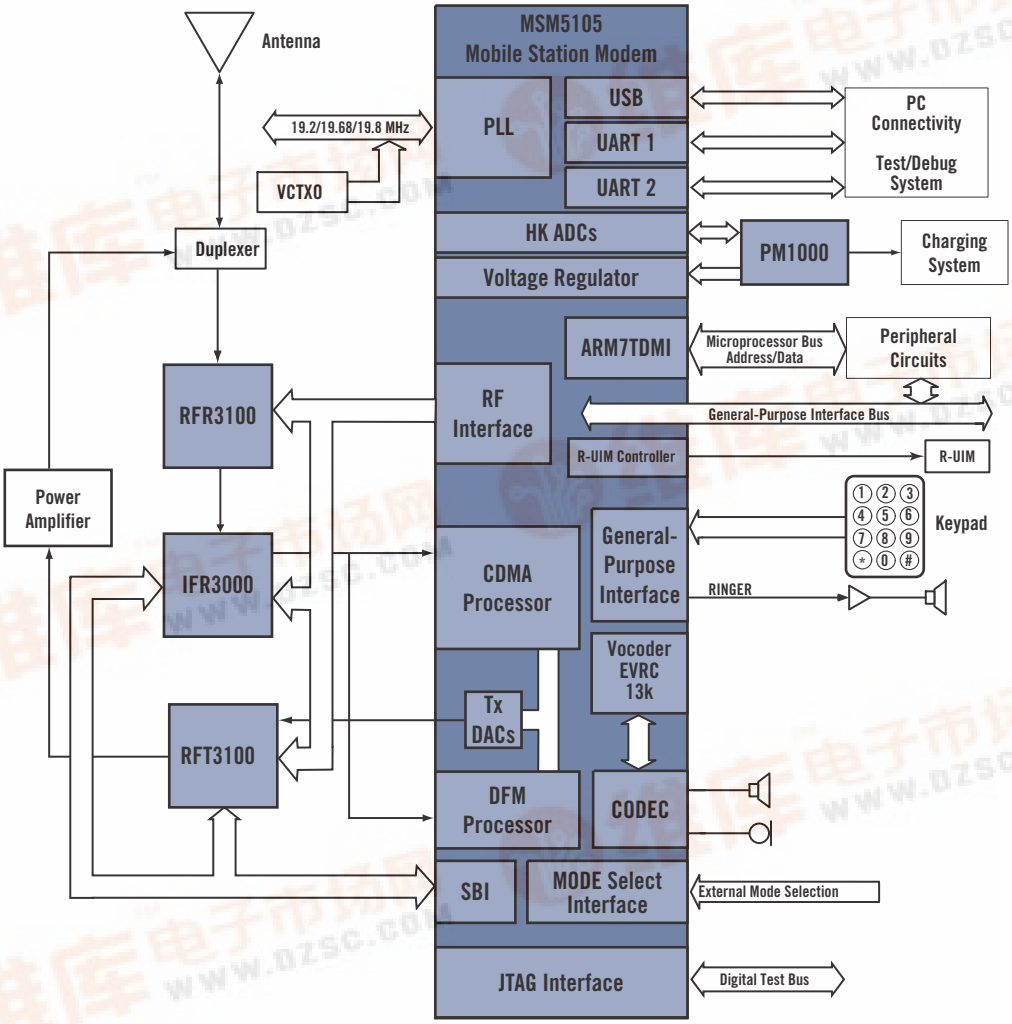

MSM5105 Functional Block Diagram

Overview

QUALCOMM's 3G CDMA CDMA2000® 1X solution, the MSM5105™ Mobile Station Modem™ (MSM™) chipset and software is designed to the IS-2000 Standard and enables a doubling of overall IS-95A/B voice capacity and new, higher-data-rate services. With initial data rates that exceed the ITU requirement for full wide area mobility, the MSM5105 solution will support 153 kilobits per second (kbps), providing manufacturers worldwide with the ability to develop consumer products that provide voice and high-speed data over wireless networks. Network operators will also benefit from the cost efficiencies and the rapid time-to-market that the solution delivers for next-generation services.

QUALCOMM has developed a seamless migration path that will allow operators to move easily into the next-generation of wireless communications. This path provides compatibility among IS-95A, IS-95B and 3G CDMA2000 1X networks. Manufacturers will benefit by developing products for these networks since they offer shorter product development time, and reduced development and equipment costs by allowing the reuse of hardware, software and network protocols.

pdf.dzsc.com

3G CDMA Enabling Chipset

QUALCOMM has developed the MSM5105 chipset and system software to support the Phase 1 of the IS-2000 Standard (CDMA2000 1X). To enable rapid design times and an easy migration path to CDMA2000 1X, the MSM5105 chipset builds on the highly successful IS-95A/B architecture of the MSM3100™ solution. The MSM5105 chipset includes QUALCOMM's existing RFR3100™, IFR3000™, RFT3100™, and PM1000™ devices. These devices perform all of the signal processing and power management in the subscriber unit, from IF to PCM, for compliance with the proposed 3G CDMA2000 1X Revision 0 standard.

The MSM5105 device is a digital baseband chip that enables manufacturers to meet or exceed the specifications of mobile stations for worldwide cdmaOne™ and CDMA2000 1X systems, including IS-95A, IS-95B, IS-2000 and its variants for PCS in Japan, Korea and South America. Featuring support for Quick Paging Channel and including an improved searcher, the MSM5105 provides an increase in handset standby time of up to 50-percent over IS-95A/B handsets. Pin compatible with the MSM3100 device, the MSM5105 device will be available in the same 208-pin Fine Pitch Ball Grid Array (FBGA) production package.

The MSM5105 device integrates functions that support a tri-mode CDMA/FM subscriber unit. Subsystems within the MSM5105 device include a CDMA processor, a Digital FM (DFM) processor, a QUALCOMM-designed DSP for voice compression, an ARM® ARM7TDMI® microprocessor. Also integrated in the MSM5105 device are analog functions such as an audio voice codec, PLL, transmit DACs, ADCs, memories, a Universal Serial Bus (USB) device controller, a R-UIM controller, 48 user-defined, general-purpose pins, peripheral interfaces, and an enhanced clock and power management architecture.

MSM5105 Features

General Features

- Pin compatible with the MSM3100 in a 208 FBGA package
- Embedded QDSP2000™ digital signal processor core, enabling a comprehensive set of features such as voice recognition, voice memo, speech compression, acoustic echo cancellation, noise suppression and audio enhancement
- Integrated USB device controller for fast and simple PC interconnect
- EVRC, 13K QCELP® Vocoder support
- High-speed data using both fundamental and supplemental channels
- Supports peak rates of up to 153 kbps
- Voice Recognition
  - Speaker-dependent, Speaker-independent and Voice prompt support
  - Multiple language support
- CMX™ support for MIDI, text and graphics-based multimedia applications with optional software
- Enhanced Tx AGC control, eliminating the need for external gain-step compensation circuitry
- 16-bit wide Flash and SRAM support
- Backward compatible with cdmaOne standards
- Standard MIDI ringer
- R-UIM interface

CDMA2000 1X RTT Features Supported by MSM5105 Device

- Fast 800 Hz Forward Power Control
- Quasi-Orthogonal Functions
- Supplemental Channel (SCH) support
- IS-2000 Forward Quick Paging Channel (F-QPCH) support
- Convolutional codes on SCH
- ITU 144 kbps requirement achieved
  - Forward dedicated control channel (F-DCCH)
  - Reverse dedicated control channel (R-DCCH)
- Radio Link Protocol (RLP3)
- Quick Paging Channel

Copyright © 2004 QUALCOMM Incorporated. All rights reserved. QUALCOMM and QCELP are registered trademarks, and MSM5105, Mobile Station Modem, MSM, MSM3100, RFR3100, IFR3100, IFR3000, RFT3100, PM1000, QDSP2000 and CMX are trademarks of QUALCOMM Incorporated. CDMA2000 is a registered trademark of the Telecommunications Industry Association (TIA USA). cdmaOne is a trademark of the CDMA Development Group (CDG). ARM7TDMI, ARM and the ARM logo are trademarks or registered trademarks of ARM Limited. All other trademarks and service marks are the property of their respective owners. Data subject to change without notice.

Printed in USA 4/2004 MSM5105-SS X11