查询MTA001M供应商 捷多邦，专业PCB打样工厂，24小时加急出货

SHINDENGEN

High Output Interface Driver ICs

MTA Series

MTA001M

FEATURES

- Nine output drivers per package
- TTL/CMOS compatible inputs (Low active)
- Enable input

APPLICATION

- Head needle drive for printer・ECR
- Stepping motor drive for office automation products
- Display drive

OUTLINE DIMENSIONS

Case : ZIP-27

(Unit : mm)

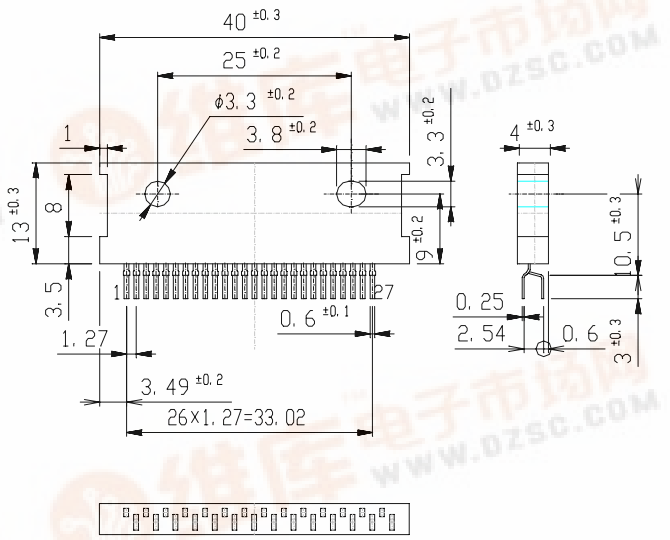

RATINGS

●Absolute Maximum Ratings (Ta=25℃)

Item	Symbol	Ratings	Unit
Output Voltage	$V_{CEO(SUS)}$	80	V
Output Current	I_O	2	A
Reverse Voltage(flyback diode)	V_R	80	V
Forward Current(each flyback diode)	I_F	2	A
Forward Current(each common terminal)	I_F	10	A
Output Current(each GND terminal)	I_{GND}	10	A
Logic Supply Voltage	V_{CC}	0～7	V
Logic Input Voltage	V_{IN}	0～V_{CC}	V
Enable Input Voltage	V_{ENA}	0～V_{CC}	V
Total Power Dissipation	P_T	5	W
Junction Temperature	Tj	150	℃
Storage Temperature	Tstg	-40～150	℃

●Electrical Characteristics (Ta=25℃)

Item	Symbol	Test Conditions	min.	typ.	max.	Unit
Output Saturation Voltage	V_{CE}(sat)	Vcc=5V,Ic=1.5A,V_{IN}=V_{ENA}=0V		1.4	1.7	V
Output Leakage Current	I_{CE}	V_{CE}=80V			10	μA
Logic Supply Current(Standby)	I_{CC}(OFF)	Vcc=5V,V_{IN}="H"		20	30	mA
Logic Supply Current(All Circuit ON)	I_{CC}(ON)	Vcc=5V,V_{IN}="L"		75	90	mA
Input High Voltage	V_{INH}	V_{CC} = 5V	2.7			V
Input Low Voltage	V_{INL}	V_{CC} = 5V			1.5	V
Logic High Input Current	I_{INH}	V_{CC} = 5V,V_{IN}=2.7V			10	μA
Logic Low Input Current	I_{INL}	V_{CC} = 5V,V_{IN}=0V		-10	-50	μA
Enable"H"Input Voltage	V_{ENAH}	V_{CC}=5V	2.7			V
Enable"L"Input Voltage	V_{ENAL}	V_{CC}=5V			1.5	V
Enable"H"Input Current	I_{ENAH}	V_{CC}=5V,V_{ENA}=2.7V			10	μA
Enable"L"Input Current	I_{ENAL}	V_{CC}=5V,V_{ENA}=0V		-25	-100	μA
Thermal Resistance	θ jc				3.57	℃/W
	θ ja				25	
Reverse Current(each flyback diode)	I_R	V_R=80V			10	μA
Reverse Voltage(flyback diode)	V_F	I_F=1.5A		1.4	1.7	V
Dielectric Strength	V_{ISO}	Substrate to Terminals	500			V

Copyright © Copy 2000 Shindengen Electric Mfg. Co. Ltd.

●Equivalent Circuit

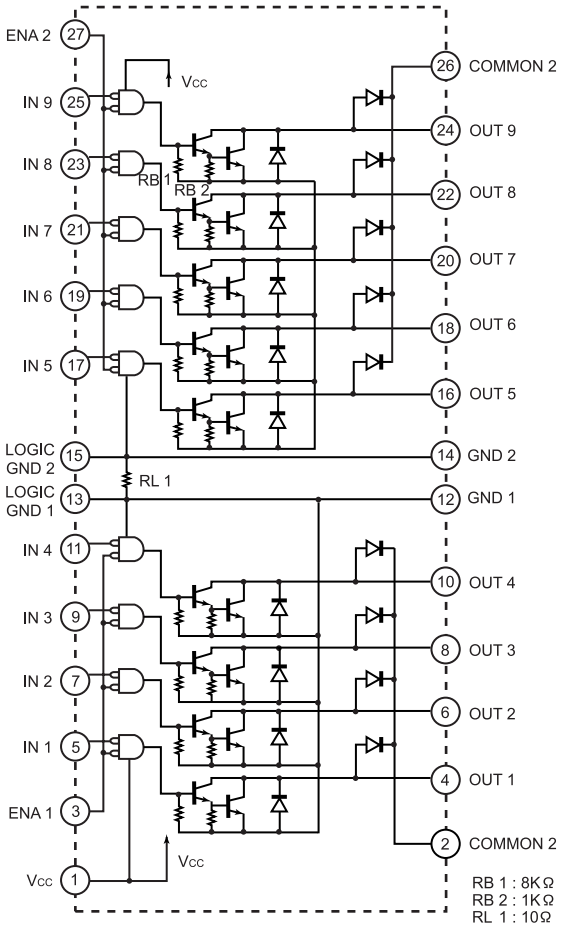

Note) Please connect the terminal 12～15 to the GND at outside correctly.

●Pin Assignment

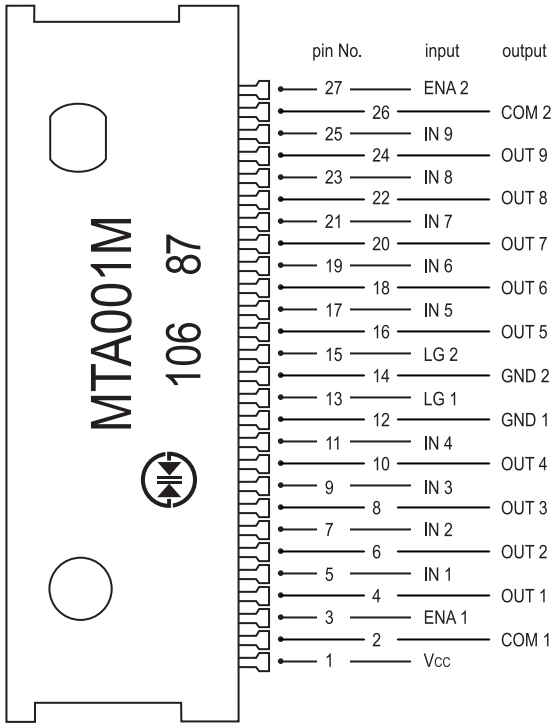

Package
ZIP-27

●True Table

Vcc	VIN	VENA	Output Transistor
L	×	×	OFF
H	H	H	OFF
H	H	L	OFF
H	L	H	OFF
H	L	L	ON

●Recommended Operating Conditions (Ta=25℃)

Item	Symbol	min.	typ.	max.	Unit
Supply Voltage	Vcc	4.5	5.0	5.5	V
Output Current	Ic If			1.5	A
Output Voltage	Vce Vr			70	V
Junction Temperature	Tj	-25		120	℃

Copyright & Copy:2000 Shindengen Electric Mfg Co Ltd