查询NC7ST08供应商 捷多邦，专业PCB打样工厂，24小时加急出货

FAIRCHILD SEMICONDUCTOR™

January 1997
Revised June 2000

NC7ST08
TinyLogic™ HST 2-Input AND Gate

General Description

The NC7ST08 is a single 2-Input high performance CMOS AND Gate, with TTL-compatible inputs. Advanced Silicon Gate CMOS fabrication assures high speed and low power circuit operation. ESD protection diodes inherently guard both inputs and output with respect to the V_{CC} and GND rails. High gain circuitry offers high noise immunity and reduced sensitivity to input edge rate. The TTL-compatible inputs facilitate TTL to NMOS/CMOS interfacing. Device performance is similar to MM74HCT but with 1/2 the output current drive of HC/HCT.

Features

- Space saving SOT23 or SC70 5-lead package
- High Speed:
  t_{PD} 6 ns (typ), V_{CC} = 5V, C_L = 15 pF, T_A = 25°C
- Low Quiescent Power, I_{CC} < 1 µA, V_{CC} = 5.5V
- Balanced Output Drive; 2 mA I_{OL}, –2 mA I_{OH}
- TTL-compatible inputs

Ordering Code:

Order Number	Package Number	Product Code Top Mark	Package Description	Supplied As
NC7ST08M5	MA05B	8S08	5-Lead SOT23, JEDEC MO-178, 1.6mm	250 Units on Tape and Reel
NC7ST08M5X	MA05B	8S08	5-Lead SOT23, JEDEC MO-178, 1.6mm	3k Units on Tape and Reel
NC7ST08P5	MAA05A	T08	5-Lead SC70, EIAJ SC-88a, 1.25mm Wide	250 Units on Tape and Reel
NC7ST08P5X	MAA05A	T08	5-Lead SC70, EIAJ SC-88a, 1.25mm Wide	3k Units on Tape and Reel

Logic Symbol

IEEE/IEC

Connection Diagram

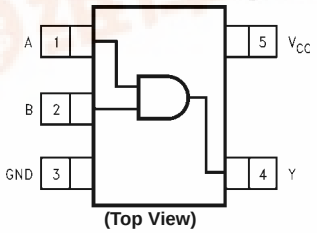

(Top View)

Pin Descriptions

Pin Names	Description
A, B	Inputs
Y	Output

Function Table

Y = AB

Inputs		Output
A	B	Y
L	L	L
L	H	L
H	L	L
H	H	H

H = HIGH Logic Level
L = LOW Logic Level

TinyLogic™ is a trademark of Fairchild Semiconductor Corporation.

© 2000 Fairchild Semiconductor Corporation

找PDF 维库一下 pdf.dzsc.com

Absolute Maximum Ratings (Note 1)

Supply Voltage (V_{CC})	−0.5V to +7.0V
DC Input Diode Current (I_{IK})	
@V_{IN} < −0.5V	−20 mA
@V_{IN} ≥ V_{CC} + 0.5V	+20 mA
DC Input Voltage (V_{IN})	−0.5V to V_{CC} + 0.5V
DC Output Diode Current (I_{OK})	
V_{OUT} < −0.5V	−20 mA
V_{OUT} > V_{CC} + 0.5V	+20 mA
Output Voltage (V_{OUT})	−0.5V to V_{CC} + 0.5V
DC Output Source or Sink Current (I_{OUT})	±12.5 mA
DC V_{CC} or Ground Current per Supply Pin (I_{CC} or I_{GND})	±25 mA
Storage Temperature (T_{STG})	−65°C to +150°C
Junction Temperature (T_J)	150°C
Lead Temperature (T_L); (Soldering, 10 seconds)	260°C
Power Dissipation (P_D) @+85°C	
SOT23-5	200 mW
SC70-5	150 mW

Recommended Operating Conditions (Note 2)

Supply Voltage	4.5V to 5.5V
Input Voltage (V_{IN})	0.0V to V_{CC}
Output Voltage (V_{OUT})	0V to V_{CC}
Operating Temperature (T_A)	−40°C to +85°C
Input Rise and Fall Time (t_r, t_f)	
V_{CC} = 5.0V	0 ns to 500 ns
Thermal Resistance (θ_{JA})	
SOT23-5	300°C/W
SC70-5	425°C/W

Note 1: Absolute Maximum Ratings are those values beyond which damage to the device may occur. The databook specifications should be met, without exception, to ensure that the system design is reliable over its power supply, temperature, and output/input loading variables. Fairchild does not recommend operation of circuits outside the databook specifications.

Note 2: Unused inputs must be held HIGH or LOW. They may not float.

DC Electrical Characteristics

Symbol	Parameter	V_{CC} (V)	T_A = +25°C Min	Typ	Max	T_A = 40°C to +85°C Min	Max	Units	Conditions
V_{IH}	HIGH Level Input Voltage	4.5–5.5	2.0			2.0		V	
V_{IL}	LOW Level Input Voltage	4.5–5.5			0.8		0.8	V	
V_{OH}	HIGH Level Output Voltage	4.5	4.4	4.5		4.4		V	I_{OH} = −20 µA
		4.5	4.18	4.35		4.13			I_{OH} = −2 mA, V_{IN} = V_{IH}
V_{OL}	LOW Level Output Voltage	4.5		0	0.1		0.1	V	I_{OL} = 20 µA
		4.5		0.10	0.26		0.33		I_{OL} = 2 mA, V_{IN} = V_{IL}
I_{IN}	Input Leakage Current	5.5			±0.1		±1.0	V	0 ≤ V_{IN} ≤ 5.5V
I_{CC}	Quiescent Supply Current	5.5			1.0		10.0	µA	V_{IN} = V_{CC} or GND
I_{CCT}	I_{CC} per Input	5.5			2.0		2.9	mA	One input V_{IN} = 0.5V or 2.4V, other input V_{CC} or GND

AC Electrical Characteristics

Symbol	Parameter	V_{CC} (V)	$T_A = +25°C$ Min	Typ	Max	$T_A = 40°C$ to $+85°C$ Min	Max	Units	Conditions	Fig. No.
t_{PLH}, t_{PHL}	Propagation Delay	5.0		4	12			ns	$C_L = 15$ pF	Figures 1, 3
				6	17					
		4.5		6	16		20	ns	$C_L = 50$ pF	
				12	27		31			
		5.5		5	14		18			
				11	26		30			
t_{TLH}, t_{THL}	Output Transition Time	5.0		4	10			ns	$C_L = 15$ pF	Figures 1, 3
		4.5		11	25		31	ns	$C_L = 50$ pF	
		5.5		10	21		26			
C_{IN}	Input Capacitance	Open			10			pF		
C_{PD}	Power Dissipation Capacitance	5.0		6				pF	(Note 3)	Figure 2

Note 3: C_{PD} is defined as the value of the internal equivalent capacitance which is derived from dynamic operating current consumption (I_{CCD}) at no output loading and operating at 50% duty cycle. (See Figure 2.) C_{PD} is related to I_{CCD} dynamic operating current by the expression:
$I_{CCD} = (C_{PD})(V_{CC})(f_{IN}) + (I_{CC}static)$.

AC Loading and Waveforms

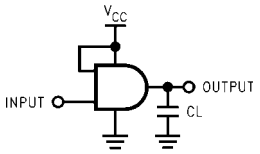

C_L includes load and stray capacitance

Input PRR = 1.0 MHz; t_w = 500 ns

FIGURE 1. AC Test Circuit

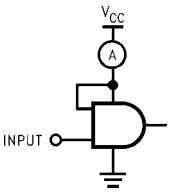

Input = AC Waveform; PRR = variable; Duty Cycle = 50%

FIGURE 2. I_{CCD} Test Circuit

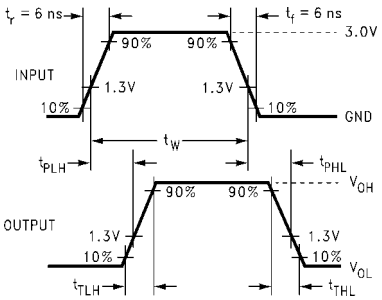

FIGURE 3. AC Waveforms

Tape and Reel Specification

TAPE FORMAT

Package Designator	Tape Section	Number Cavities	Cavity Status	Cover Tape Status
M5, P5	Leader (Start End)	125 (typ)	Empty	Sealed
	Carrier	250	Filled	Sealed
	Trailer (Hub End)	75 (typ)	Empty	Sealed
M5X, P5X	Leader (Start End)	125 (typ)	Empty	Sealed
	Carrier	3000	Filled	Sealed
	Trailer (Hub End)	75 (typ)	Empty	Sealed

TAPE DIMENSIONS inches (millimeters)

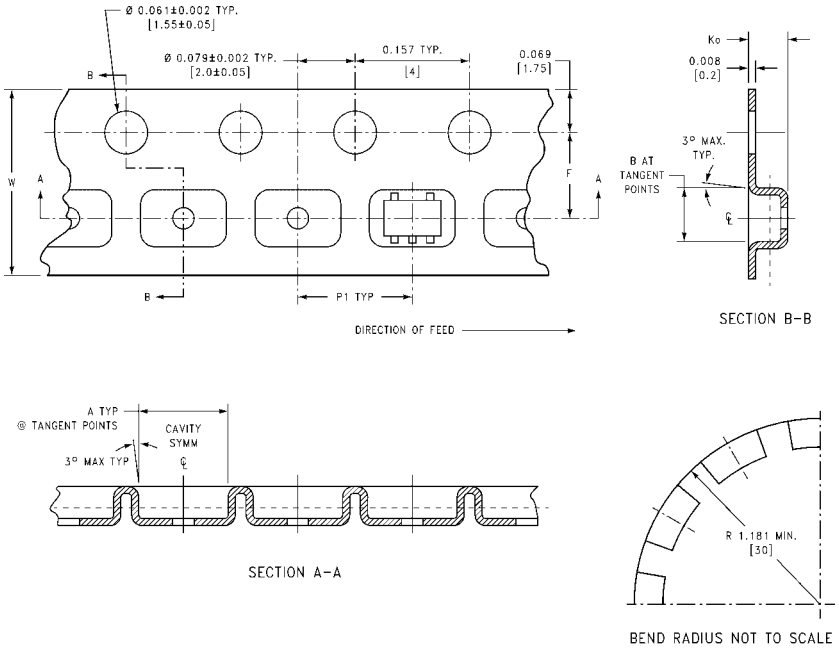

Package	Tape Size	DIM A	DIM B	DIM F	DIM K_o	DIM P1	DIM W
SC70-5	8 mm	0.093 (2.35)	0.096 (2.45)	0.138 ± 0.004 (3.5 ± 0.10)	0.053 ± 0.004 (1.35 ± 0.10)	0.157 (4)	0.315 ± 0.004 (8 ± 0.1)
SOT23-5	8 mm	0.130 (3.3)	0.130 (3.3)	0.138 ± 0.002 (3.5 ± 0.05)	0.055 ± 0.004 (1.4 ± 0.11)	0.157 (4)	0.315 ± 0.012 (8 ± 0.3)

Tape and Reel Specification (Continued)

REEL DIMENSIONS inches (millimeters)

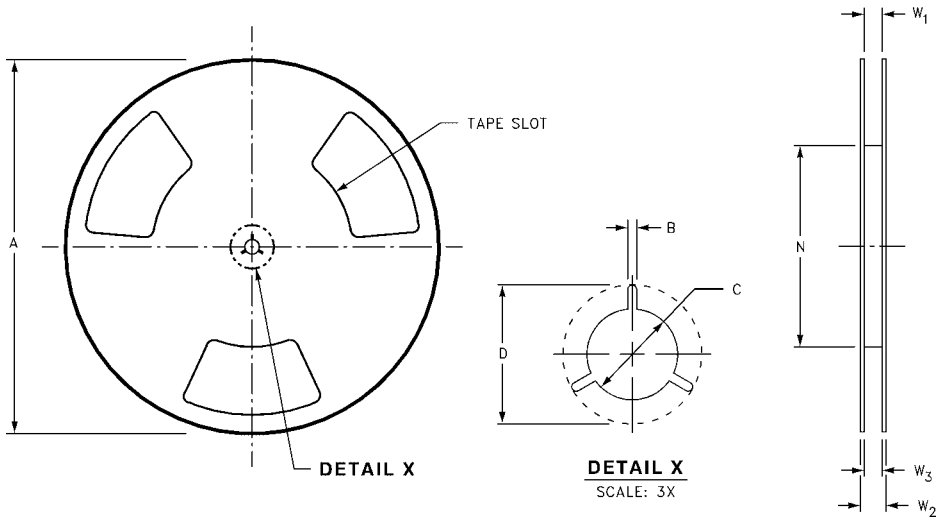

Tape Size	A	B	C	D	N	W1	W2	W3
8 mm	7.0 (177.8)	0.059 (1.50)	0.512 (13.00)	0.795 (20.20)	2.165 (55.00)	0.331 + 0.059/–0.000 (8.40 + 1.50/–0.00)	0.567 (14.40)	W1 + 0.078/–0.039 (W1 + 2.00/–1.00)

Physical Dimensions inches (millimeters) unless otherwise noted

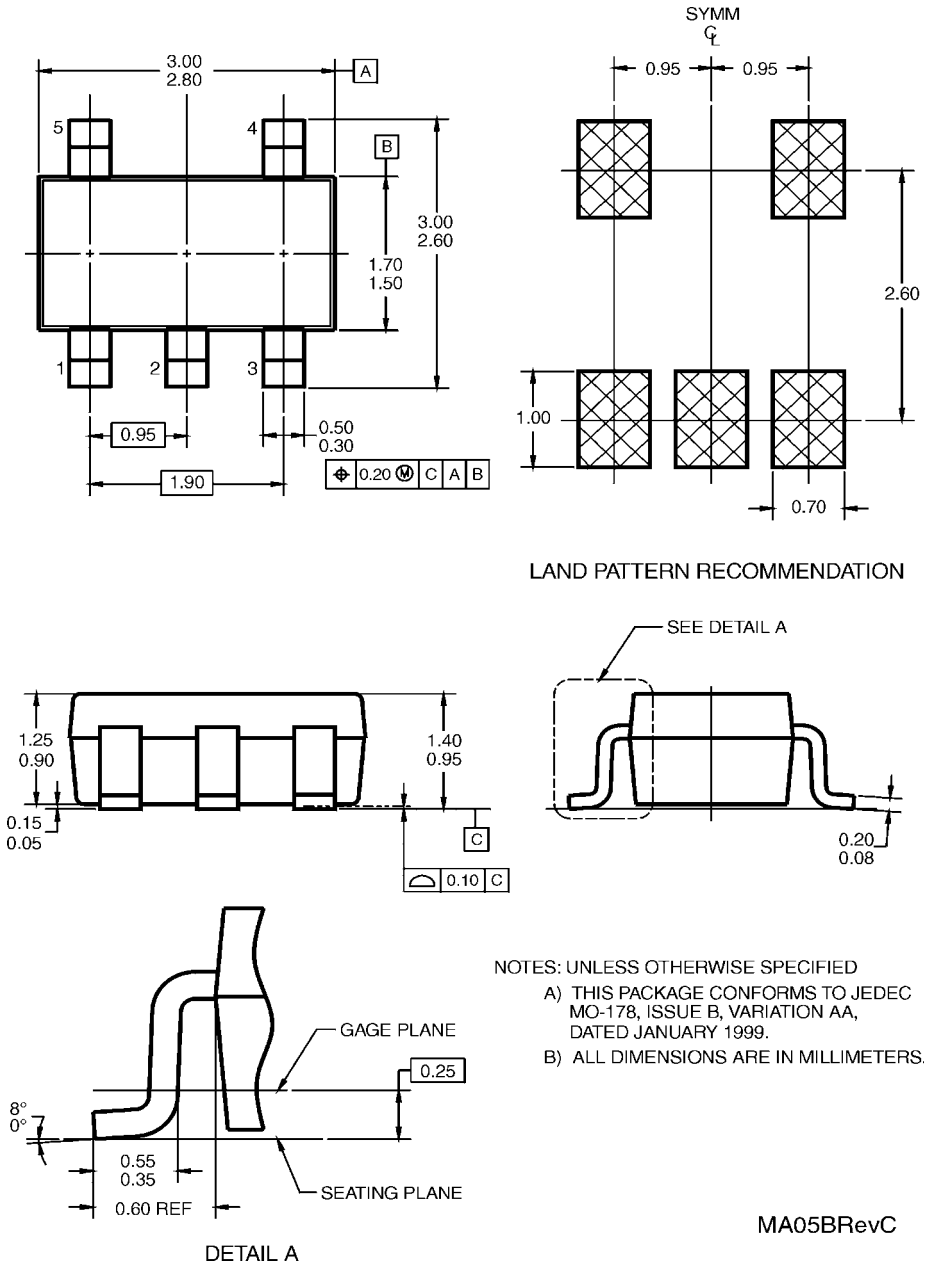

NOTES: UNLESS OTHERWISE SPECIFIED

A) THIS PACKAGE CONFORMS TO JEDEC MO-178, ISSUE B, VARIATION AA, DATED JANUARY 1999.

B) ALL DIMENSIONS ARE IN MILLIMETERS.

MA05BRevC

5-Lead SOT23, JEDEC MO-178, 1.6mm
Package Number MA05B

Physical Dimensions inches (millimeters) unless otherwise noted (Continued)

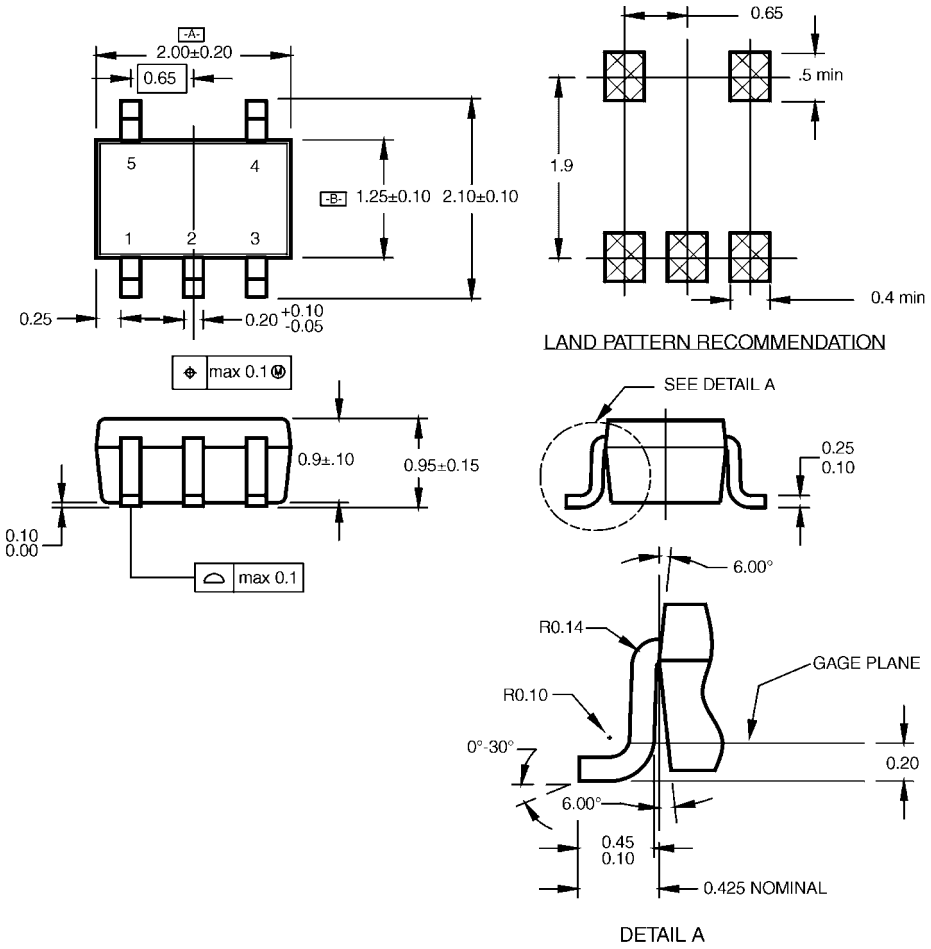

NOTES:

A. CONFORMS TO EIAJ REGISTERED OUTLINE DRAWING SC88A.
B. DIMENSIONS DO NOT INCLUDE BURRS OR MOLD FLASH.
C. DIMENSIONS ARE IN MILLIMETERS.

MAA05ARevC

5-Lead SC70, EIAJ SC-88a, 1.25mm Wide
Package Number MAA05A

Fairchild does not assume any responsibility for use of any circuitry described, no circuit patent licenses are implied and Fairchild reserves the right at any time without notice to change said circuitry and specifications.

LIFE SUPPORT POLICY

FAIRCHILD'S PRODUCTS ARE NOT AUTHORIZED FOR USE AS CRITICAL COMPONENTS IN LIFE SUPPORT DEVICES OR SYSTEMS WITHOUT THE EXPRESS WRITTEN APPROVAL OF THE PRESIDENT OF FAIRCHILD SEMICONDUCTOR CORPORATION. As used herein:

1. Life support devices or systems are devices or systems which, (a) are intended for surgical implant into the body, or (b) support or sustain life, and (c) whose failure to perform when properly used in accordance with instructions for use provided in the labeling, can be reasonably expected to result in a significant injury to the user.
2. A critical component in any component of a life support device or system whose failure to perform can be reasonably expected to cause the failure of the life support device or system, or to affect its safety or effectiveness.

www.fairchildsemi.com