查询NCS2201SN1T1供应商

NCS2200 Series

Low Voltage Comparators

The NCS2200 Series is an industry first sub−one volt, low power comparator family. These devices consume only 10 μA of supply current. They are guaranteed to operate at a low voltage of 0.85 V which allows them to be used in systems that require less than 1.0 V and are fully operational up to 6.0 V which makes them convenient for use in both 3.0 V and 5.0 V systems. Additional features include no output phase inversion with overdriven inputs, internal hysteresis, which allows for clean output switching, and rail−to−rail input and output performance. The NCS2200 Series is available in the tiny SOT−23−5 and SOT−23−6 package. There are eight options featuring two industry standard pinouts. Additionally, the NCS2200 device is available in the tiny QFN 2x2.2 package and the SC70−5 package. (Table 1)

The NCS2201/3 Series in the SOT−23−6 package features an enable function, which can be externally controlled. When the enable pin is pulled low (output tri−state mode), current consumption is typically 0.3 μA. This allows the user to implement these devices in power sensitive applications such as portable electronics.

Features

- Operating Voltage of 0.85 V to 6.0 V
- Rail−to−Rail Input/Output Performance
- Low Supply Current of 10 μA
- No Phase Inversion with Overdriven Input Signals
- Glitchless Transitioning in or out of Tri−State Mode
- Complementary or Open Drain Output Configuration
- Available with the Enable Function
- Internal Hysteresis
- Propagation Delay of 1.1 μs
- Pb−Free Packages are Available

Typical Applications

- Single Cell NiCd/NiMH Battery Powered Applications
- Cellular Telephones
- Alarm and Security Systems
- Personal Digital Assistants

ON Semiconductor®

http://onsemi.com

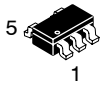

SOT−23−5
SN SUFFIX
CASE 483

SOT−23−6
SN SUFFIX
CASE 318G

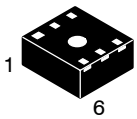

QFN 2x2.2
SQL SUFFIX
CASE 488

SC70−5
SQ SUFFIX
CASE 419A

ORDERING INFORMATION

See detailed ordering and shipping information in the package dimensions section on page 12 of this data sheet.

DEVICE MARKING INFORMATION

See general marking information in the device marking section on page 13 of this data sheet.

© Semiconductor Components Industries, LLC, 2005

March, 2005 − Rev. 6

Publication Order Number:
NCS2200/D

Table 1. Comparator Selector Guide

Output Type	Device	Package	Pinout Style
Complementary	NCS2200SN1T1	SOT−23−5	1
Complementary	NCS2200SN2T1	SOT−23−5	2
Complementary	NCS2200SQ2T2	SC70−5	2
Complementary, Enable	NCS2201SN1T1	SOT−23−6	1
Complementary, Enable	NCS2201SN2T1	SOT−23−6	2
Open Drain	NCS2202SN1T1	SOT−23−5	1
Open Drain	NCS2202SN2T1	SOT−23−5	2
Open Drain, Enable	NCS2203SN1T1	SOT−23−6	1
Open Drain, Enable	NCS2203SN2T1	SOT−23−6	2
Complementary	NCS2200SQLT1	QFN, 2x2.2	N/A

PIN CONNECTIONS

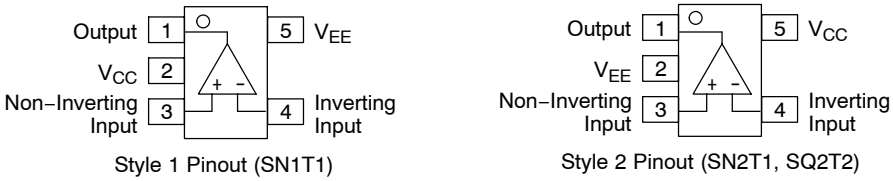

Figure 1. SOT−23−5 (NCS2200, NCS2202), SC70−5 (NCS2200)

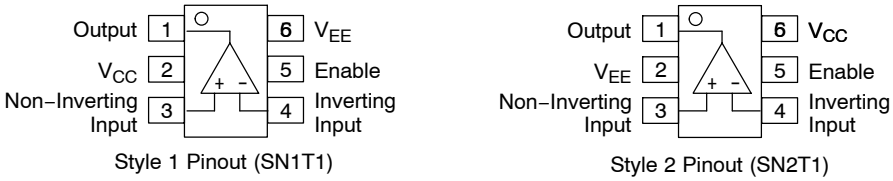

Figure 2. SOT−23−6 (NCS2201, NCS2203)

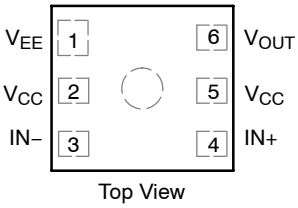

Figure 3. QFN 2x2.2 (NCS2200)

MAXIMUM RATINGS

Rating	Symbol	Value	Unit
Supply Voltage Range (V_{CC} to V_{EE})	V_S	6.0	V
Non−inverting/Inverting Input to V_{EE}	–	−0.2 to (V_{CC} + 0.2)	V
Operating Junction Temperature	T_J	150	°C
Operating Ambient Temperature	T_A	−40 to +105	°C
Storage Temperature Range	T_{stg}	−65 to +150	°C
Output Short Circuit Duration Time (Note 1)	t_S	Indefinite	s
ESD Tolerance (Note 2) NCS2200/2201 Human Body Model Machine Model NCS2202/NCS2203 Human Body Model Machine Model	–	 2000 200 1000 200	V
Thermal Resistance, Junction−to−Ambient TSOP−5 QFN (Note 3) SC70−5	$R_{\theta JA}$	 238 215 283	°C/W

Maximum ratings are those values beyond which device damage can occur. Maximum ratings applied to the device are individual stress limit values (not normal operating conditions) and are not valid simultaneously. If these limits are exceeded, device functional operation is not implied, damage may occur and reliability may be affected.

1. The maximum package power dissipation limit must not be exceeded.

$$P_D = \frac{T_{J(max)} - T_A}{R_{\theta JA}}$$

2. ESD data available upon request.
3. For more information, refer to application note, AND8080/D.

ELECTRICAL CHARACTERISTICS (For all values V_{CC} = 0.85 V to 6.0 V, V_{EE} = 0 V, T_A = 25°C, unless otherwise noted.) (Note 4)

Characteristics	Symbol	Min	Typ	Max	Unit
Input Hysteresis T_A = 25°C	V_{HYS}	2.0	8.0	20	mV
Input Offset Voltage	V_{IO}				mV
V_{CC} = 0.85 V					
T_A = 25°C		−10	0.5	+10	
T_A = −40°C to 105°C		−12	–	+12	
V_{CC} = 3.0 V					
T_A = 25°C		−6.0	0.5	+6.0	
T_A = −40°C to 105°C		−8.0	–	+8.0	
V_{CC} = 6.0 V					
T_A = 25°C		−5.0	0.5	+5.0	
T_A = −40°C to 105°C		−7.0	–	+7.0	
Common Mode Voltage Range	V_{CM}	–	V_{EE} to V_{CC}	–	V
Output Leakage Current (NCS2202/NCS2203) V_{CC} = 6.0 V	I_{LEAK}	–	3.3	–	nA
Output Short−Circuit Sourcing or Sinking	I_{SC}	–	70	–	mA
Common Mode Rejection Ratio V_{CM} = V_{CC}	CMRR	53	65	–	dB
Input Bias Current	I_{IB}	–	1.0	–	pA
Power Supply Rejection Ratio ΔV_S = 2.575 V	PSRR	45	55	–	dB
Supply Current	I_{CC}				μA
V_{CC} = 0.85 V					
T_A = 25°C		–	10	15	
T_A = −40°C to 105°C			–	17	
V_{CC} = 3.0 V					
T_A = 25°C		–	10	15	
T_A = −40°C to 105°C			–	17	
V_{CC} = 6.0 V					
T_A = 25°C		–	10	15	
T_A = −40°C to 105°C			–	17	
Output Voltage High (NCS2200/NCS2201)	V_{OH}				V
V_{CC} = 0.85 V, I_{source} = 0.5 mA					
T_A = 25°C		V_{CC} − 0.2	V_{CC} − 0.10	–	
T_A = −40°C to 105°C		V_{CC} − 0.225	–		
V_{CC} = 3.0 V, I_{source} = 3.0 mA					
T_A = 25°C			V_{CC} − 0.12	–	
T_A = −40°C to 105°C		V_{CC} − 0.2	–		
V_{CC} = 6.0 V, I_{source} = 5.0 mA		V_{CC} − 0.25			
T_A = 25°C			V_{CC} − 0.12	–	
T_A = −40°C to 105°C		V_{CC} − 0.2	–		
		V_{CC} − 0.25			
Output Voltage Low	V_{OL}				V
V_{CC} = 0.85 V, I_{sink} = 0.5 mA					
T_A = 25°C		–	V_{EE} + 0.10	V_{EE} + 0.2	
T_A = −40°C to 105°C			–	V_{EE} + 0.225	
V_{CC} = 3.0 V, I_{sink} = 3.0 mA					
T_A = 25°C		–	V_{EE} + 0.12		
T_A = −40°C to 105°C			–	V_{EE} + 0.2	
V_{CC} = 6.0 V, I_{sink} = 5.0 mA				V_{EE} + 0.25	
T_A = 25°C		–	V_{EE} + 0.12		
T_A = −40°C to 105°C			–	V_{EE} + 0.2	
				V_{EE} + 0.25	
Propagation Delay 20 mV Overdrive, C_L = 15 pF					μs
	t_{PHL}	–	0.7	–	
	t_{PLH}	–	1.1	–	
Output Fall Time V_{CC} = 6.0 V, C_L = 50 pF	t_{FALL}	–	20	–	ns
Output Rise Time V_{CC} = 6.0 V, C_L = 50 pF	t_{RISE}	–	16	–	ns
Powerup Time	t_{PU}	–	35	–	μs

4. The limits over the extended temperature range are guaranteed by design only.

ENABLE FUNCTION ELECTRICAL CHARACTERISTICS (NCS2201/NCS2203 only) (For all values V_{CC} = 6.0 V, V_{EE} = 0 V, T_A = 25°C, unless otherwise noted.) (Note 5)

Characteristics	Symbol	Min	Typ	Max	Unit
Enable Voltage Threshold Input Voltage Increasing, Device Enabled Input Voltage Decreasing, Device Disabled	 $V_{EN(HIGH)}$ $V_{EN(LOW)}$	 – 2.0	 3.2 2.2	 4.0 –	V
Enable Hysteresis	V_{ENHYS}	–	1.0	–	V
Enable Pullup Current	I_{EN}	–	100	200	nA
Disable State Supply Current	I_{CCD}	–	300	600	nA
Enable Input to Output Propagation Delay Input Voltage Increasing, Device Enabled Input Voltage Decreasing, Device Disabled	 $t_{EN(ON)}$ $t_{EN(OFF)}$	 – –	 82 0.5	 – –	μs

5. The limits over the extended temperature range are guaranteed by design only.

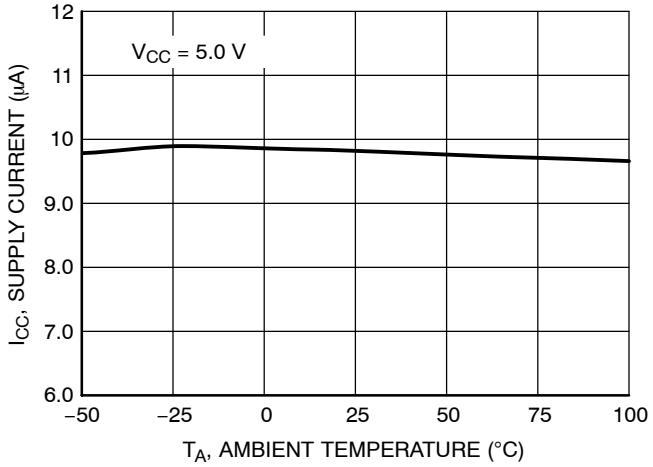

Figure 1. NCS2200 Series Supply Current versus Temperature

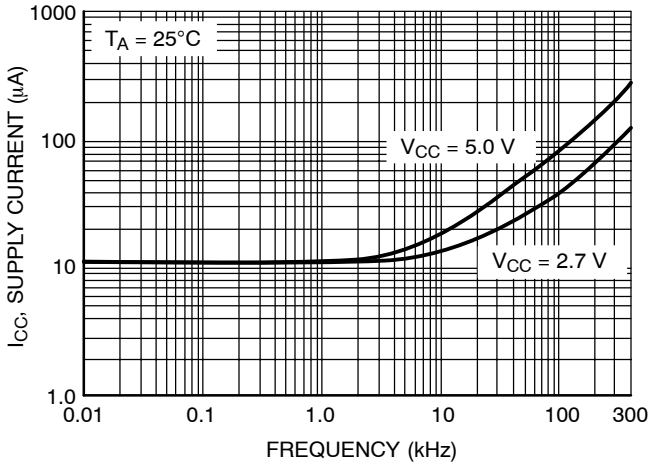

Figure 2. NCS2200 Series Supply Current versus Output Transition Frequency

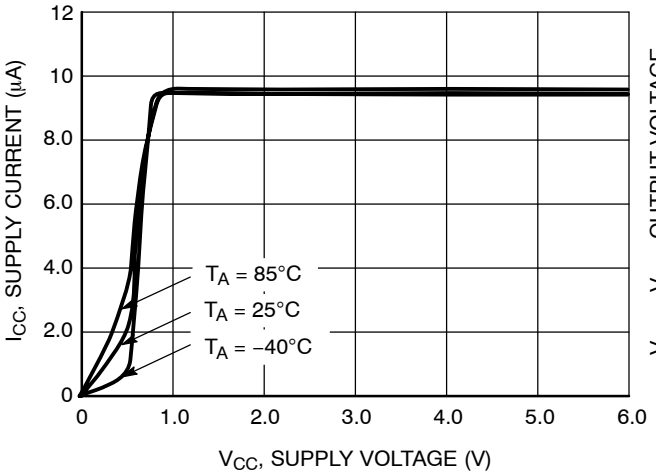

Figure 3. NCS2200 Series Supply Current versus Supply Voltage

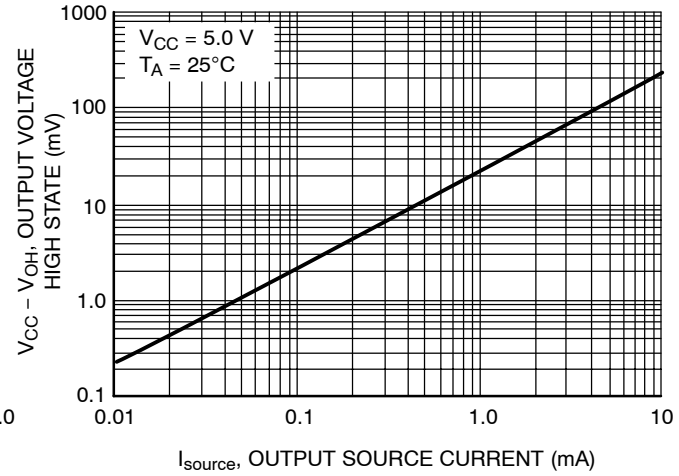

Figure 4. NCS2200/1 Output Voltage High State versus Output Source Current

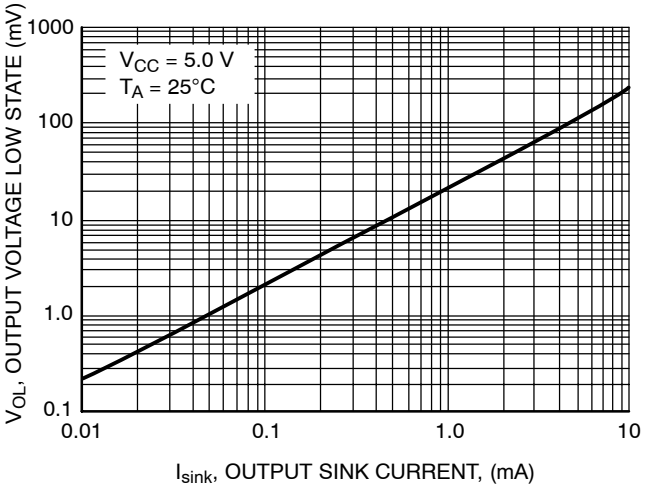

Figure 5. NCS2200 Series Output Voltage Low State versus Output Sink Current

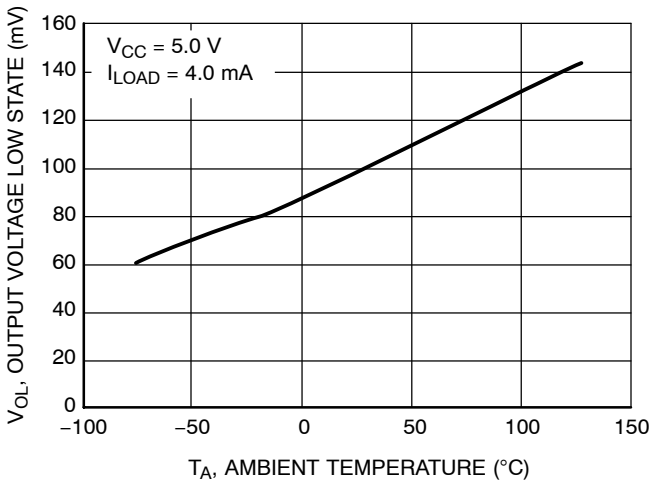

Figure 6. NCS2200 Series Output Voltage Low State versus Temperature

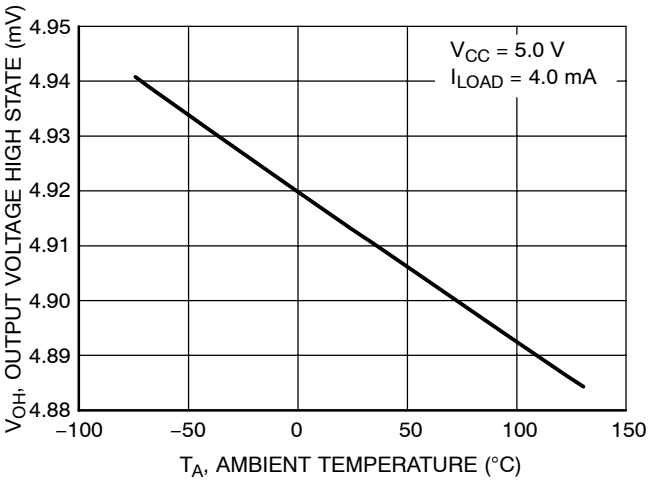

Figure 7. NCS2200/1 Series Output Voltage High State versus Temperature

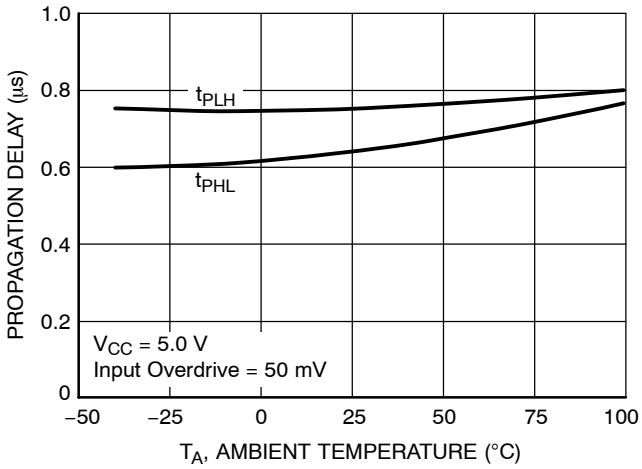

Figure 8. NCS2200 Series Propagation Delay versus Temperature

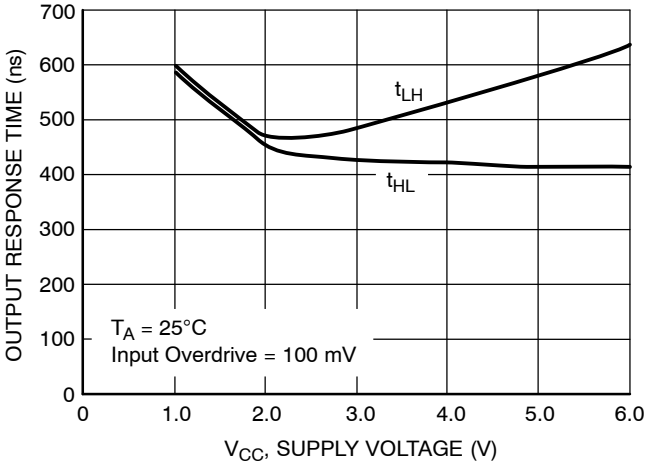

Figure 9. NCS2200 Series Output Response Time versus Supply Voltage

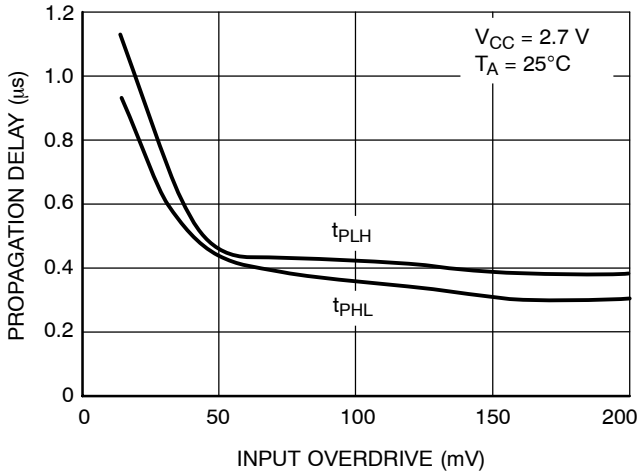

Figure 10. NCS2200 Series Propagation Delay versus Input Overdrive

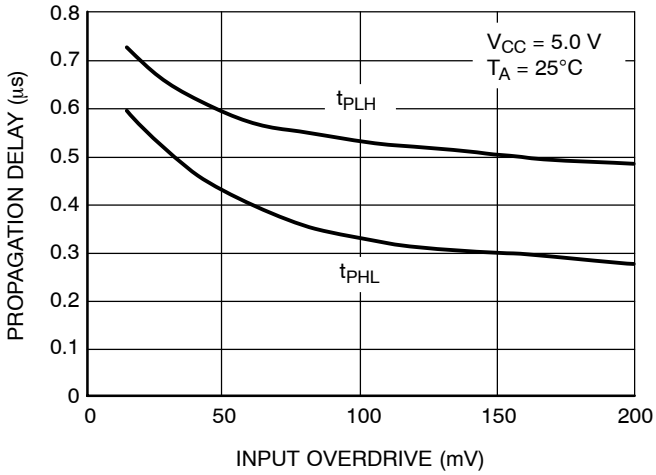

Figure 11. NCS2200 Series Propagation Delay versus Input Overdrive

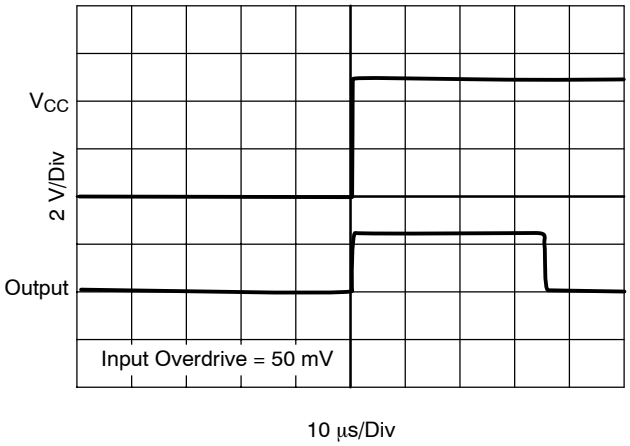

Figure 12. NCS2200 Series Powerup Delay

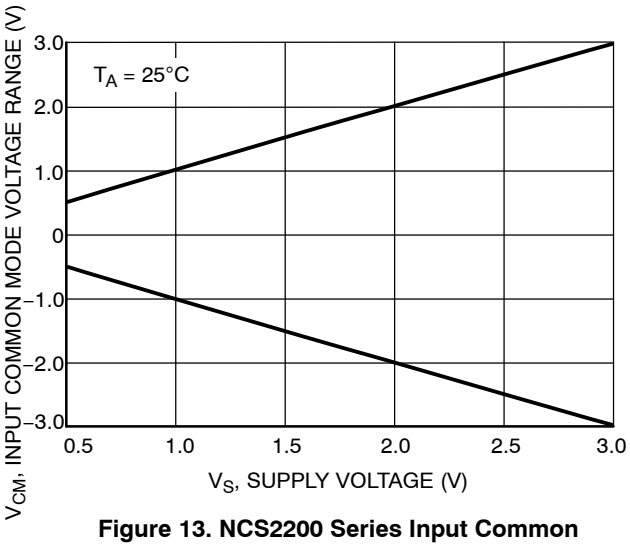

Figure 13. NCS2200 Series Input Common Mode Voltage Range versus Supply Voltage

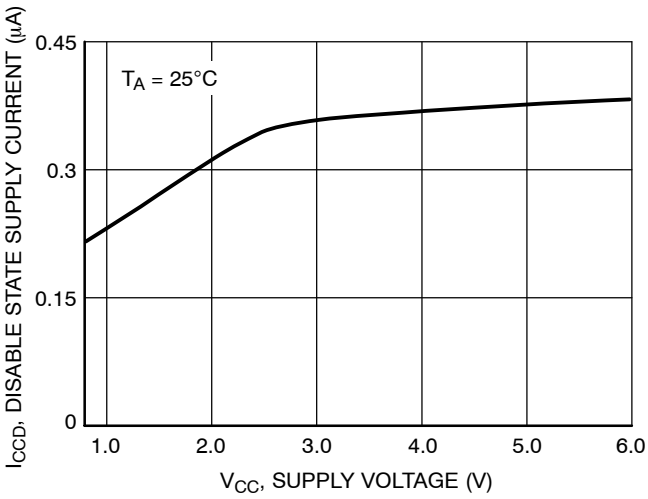

Figure 14. NCS2201/3 Series Disable State Supply Current versus Supply Voltage

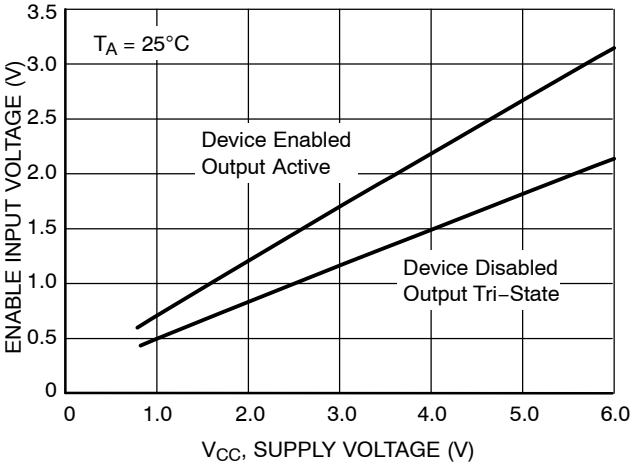

Figure 15. NCS2201/3 Enable Input Voltage versus Supply Voltage

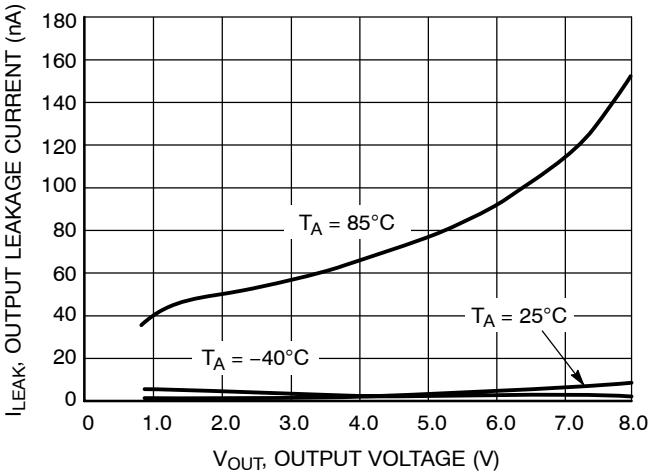

Figure 16. NCS2202/3 Output Leakage Current versus Output Voltage

OPERATING DESCRIPTION

The NCS2200 Series is an industry first sub−one volt, low power comparator family. This series is designed for rail−to−rail input and output performance. These devices consume only 10 μA of supply current while achieving a typical propagation delay of 1.1 μs at a 20 mV input overdrive. Figures 10 and 11 show propagation delay with various input overdrives. This comparator family is guaranteed to operate at a low voltage of 0.85 V up to 6.0 V. This is accomplished by the use of a modified analog CMOS process that implements depletion MOSFET devices. The common−mode input voltage range extends 0.1 V beyond the upper and lower rail without phase inversion or other adverse effects. This series is available in the SOT−23−5 and SOT−23−6 package. Additionally, the NCS2200 device is available in the tiny QFN 2x2.2 package and the SC70−5 package.

The SOT−23−6 features the enable function, which can be externally controlled. This feature allows significantly lower current consumption of 0.3 μA. This makes the devices suitable for implementation in power sensitive applications such as portable electronics. The enable function is active high when connected to the V_{CC} pin. When the enable pin is driven low (device disabled), output tri−state mode is activated. The device will remain in this mode and will not respond to any changes at the inputs of the comparator. In order to pull the device out of tri−state mode, the enable upper voltage threshold must be met. Figure 15 shows the enable input voltage required to either enable or disable the device, with a variance in supply voltage. In addition, these devices have a typical internal hysteresis of ±8.0 mV. This allows for greater noise immunity and clean output switching.

Output Stage

The NCS2200/1 has a complementary P and N Channel output stage that has capability of driving a rail−to−rail output swing with a load ranging up to 5.0 mA. It is designed such that shoot−through current is minimized while switching. This feature eliminates the need for bypass capacitors under most circumstances.

The NCS2202/3 has an open drain N−channel output stage that can be pulled up to 6.0 V (max) with an external resistor. This facilitates mixed voltage system applications.

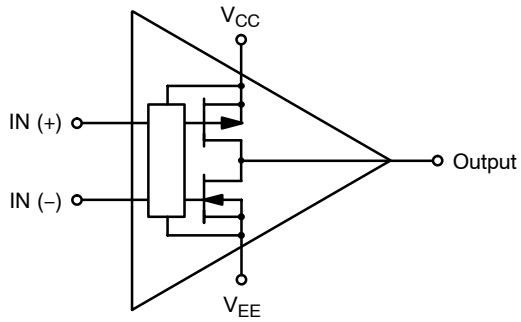

Figure 17. NCS2200/1SNxT1 Complementary Output Configuration

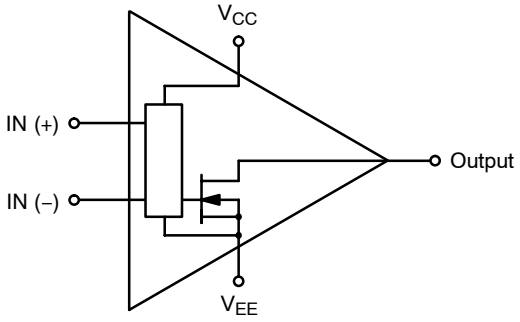

Figure 18. NCS2202/3SNxT1 Open Drain Output Configuration

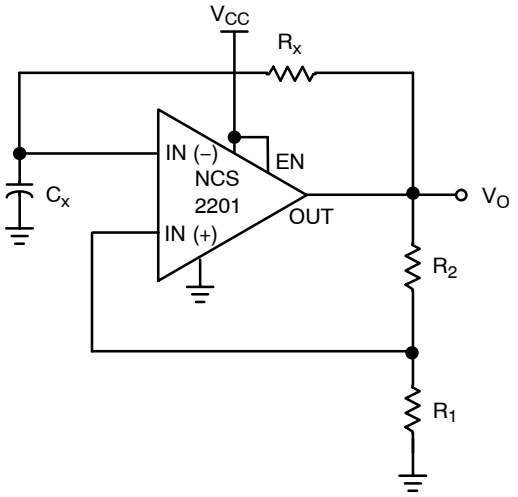

The oscillation frequency can be programmed as follows:

$$f = \frac{1}{T} = \frac{1}{2.2\ R_X C_X}$$

Figure 19. Schmitt Trigger Oscillator

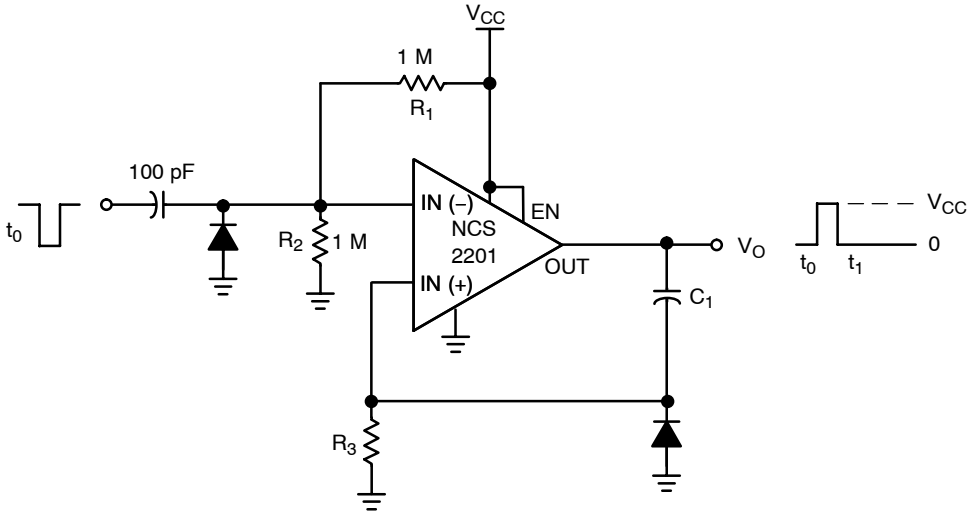

The resistor divider R_1 and R_2 can be used to set the magnitude of the input pulse. The pulse width is set by adjusting C_1 and R_3.

Figure 20. One–Shot Multivibrator

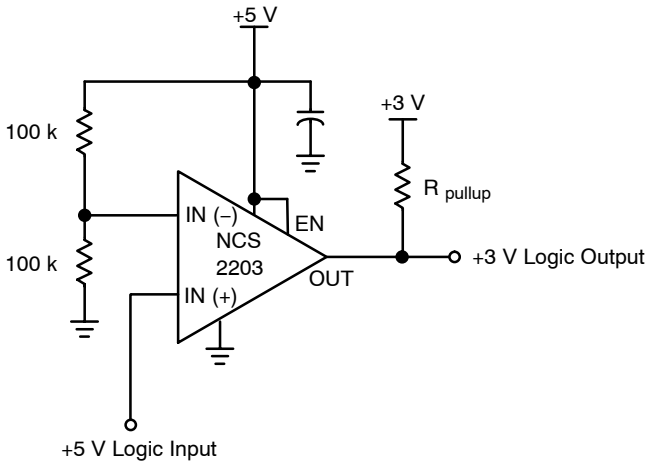

This circuit converts 5 V logic to 3 V logic. Using the NCS2202/3 allows for full 5 V logic swing without creating overvoltage on the 3 V logic input.

Figure 21. Logic Level Translator

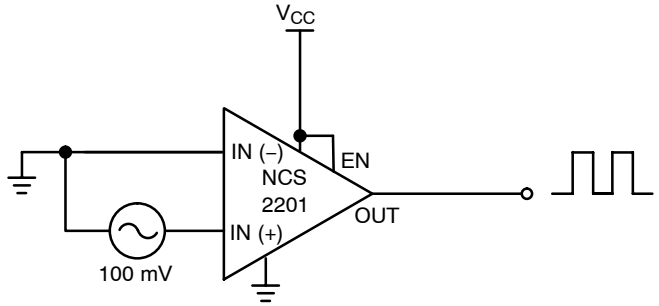

Figure 22. Zero−Crossing Detector

ORDERING INFORMATION

Device	Pinout Style	Output Type	Package	Shipping†
NCS2200SN1T1	1	Complementary	SOT−23−5	3000 / Tape & Reel
NCS2200SN1T1G	1	Complementary	SOT−23−5 (Pb−Free)	3000 / Tape & Reel
NCS2200SN2T1	2	Complementary	SOT−23−5	3000 / Tape & Reel
NCS2200SN2T1G	2	Complementary	SOT−23−5 (Pb−Free)	3000 / Tape & Reel
NCS2200SQ2T2	2	Complementary	SC70−5	3000 / Tape & Reel
NCS2200SQ2T2G	2	Complementary	SC70−5 (Pb−Free)	3000 / Tape & Reel
NCS2200SQLT1	N/A	Complementary	QFN, 2x2.2	3000 / Tape & Reel
NCS2200SQLT1G	N/A	Complementary	QFN, 2x2.2 (Pb−Free)	3000 / Tape & Reel
NCS2201SN1T1	1	Complementary, Enable	SOT−23−6	3000 / Tape & Reel
NCS2201SN1T1G	1	Complementary, Enable	SOT−23−6 (Pb−Free)	3000 / Tape & Reel
NCS2201SN2T1	2	Complementary, Enable	SOT−23−6	3000 / Tape & Reel
NCS2201SN2T1G	2	Complementary, Enable	SOT−23−6 (Pb−Free)	3000 / Tape & Reel
NCS2202SN1T1	1	Open Drain	SOT−23−5	3000 / Tape & Reel
NCS2202SN1T1G	1	Open Drain	SOT−23−5 (Pb−Free)	3000 / Tape & Reel
NCS2202SN2T1	2	Open Drain	SOT−23−5	3000 / Tape & Reel
NCS2202SN2T1G	2	Open Drain	SOT−23−5 (Pb−Free)	3000 / Tape & Reel
NCS2203SN1T1	1	Open Drain, Enable	SOT−23−6	3000 / Tape & Reel
NCS2203SN1T1G	1	Open Drain, Enable	SOT−23−6 (Pb−Free)	3000 / Tape & Reel
NCS2203SN2T1	2	Open Drain, Enable	SOT−23−6	3000 / Tape & Reel
NCS2203SN2T1G	2	Open Drain, Enable	SOT−23−6 (Pb−Free)	3000 / Tape & Reel

This device contains 93 active transistors.

†For information on tape and reel specifications, including part orientation and tape sizes, please refer to our Tape and Reel Packaging Specifications Brochure, BRD8011/D.

MARKING DIAGRAMS

SOT−23−5
SN SUFFIX
CASE 483

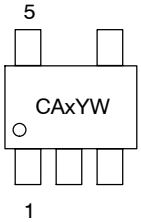

x = I for NCS2200SN1T1
J for NCS2200SN2T1
M for NCS2202SN1T1
N for NCS2202SN2T1
Y = Year
W = Work Week

SOT−23−6
SN SUFFIX
CASE 318G

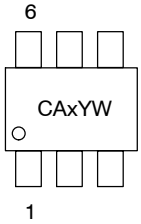

x = K for NCS2201SN1T1
L for NCS2201SN2T1
O for NCS2203SN1T1
P for NCS2203SN2T1
Y = Year
W = Work Week

QFN 2x2.2
SQL SUFFIX
CASE 488

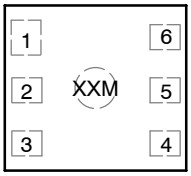

(Top View)

XX = CB for NCS2200SQLT1
M = Date Code

SC70−5
SQ SUFFIX
CASE 419A

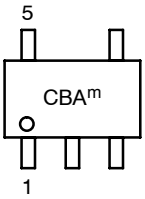

CBA = Specific Device Code
m = Date Code

PACKAGE DIMENSIONS

SOT−23−5 / TSOP−5 / SC59−5
SN SUFFIX
PLASTIC PACKAGE
CASE 483−02
ISSUE C

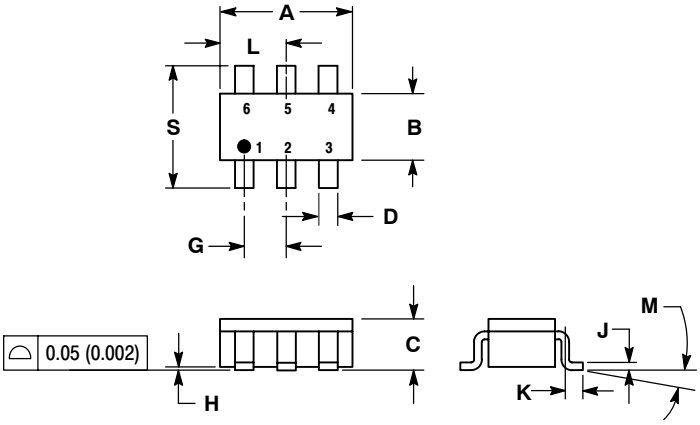

NOTES:
1. DIMENSIONING AND TOLERANCING PER ANSI Y14.5M, 1982.
2. CONTROLLING DIMENSION: MILLIMETER.
3. MAXIMUM LEAD THICKNESS INCLUDES LEAD FINISH THICKNESS. MINIMUM LEAD THICKNESS IS THE MINIMUM THICKNESS OF BASE MATERIAL.

	MILLIMETERS		INCHES	
DIM	MIN	MAX	MIN	MAX
A	2.90	3.10	0.1142	0.1220
B	1.30	1.70	0.0512	0.0669
C	0.90	1.10	0.0354	0.0433
D	0.25	0.50	0.0098	0.0197
G	0.85	1.05	0.0335	0.0413
H	0.013	0.100	0.0005	0.0040
J	0.10	0.26	0.0040	0.0102
K	0.20	0.60	0.0079	0.0236
L	1.25	1.55	0.0493	0.0610
M	0°	10°	0°	10°
S	2.50	3.00	0.0985	0.1181

SOLDERING FOOTPRINT*

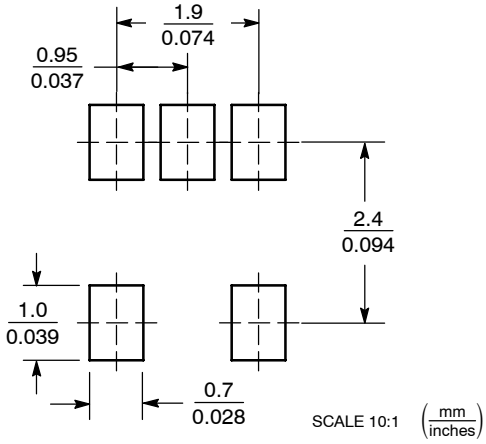

*For additional information on our Pb−Free strategy and soldering details, please download the ON Semiconductor Soldering and Mounting Techniques Reference Manual, SOLDERRM/D.

PACKAGE DIMENSIONS

SOT−23−6 / TSOP−6 / SC59−6
SN SUFFIX
PLASTIC PACKAGE
CASE 318G−02
ISSUE N

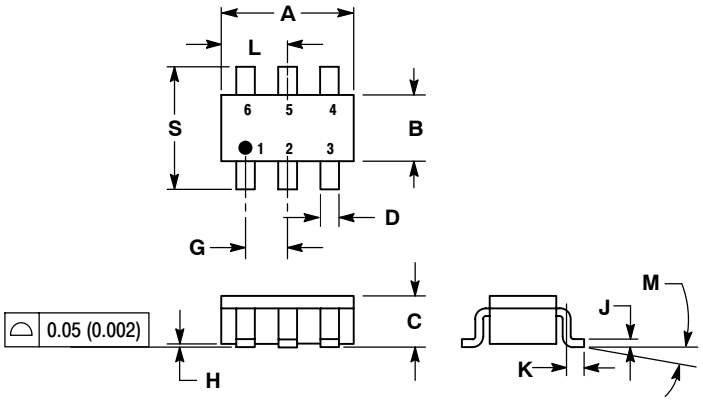

NOTES:
1. DIMENSIONING AND TOLERANCING PER ANSI Y14.5M, 1982.
2. CONTROLLING DIMENSION: MILLIMETER.
3. MAXIMUM LEAD THICKNESS INCLUDES LEAD FINISH THICKNESS. MINIMUM LEAD THICKNESS IS THE MINIMUM THICKNESS OF BASE MATERIAL.
4. DIMENSIONS A AND B DO NOT INCLUDE MOLD FLASH, PROTRUSIONS, OR GATE BURRS.

	MILLIMETERS		INCHES	
DIM	MIN	MAX	MIN	MAX
A	2.90	3.10	0.1142	0.1220
B	1.30	1.70	0.0512	0.0669
C	0.90	1.10	0.0354	0.0433
D	0.25	0.50	0.0098	0.0197
G	0.85	1.05	0.0335	0.0413
H	0.013	0.100	0.0005	0.0040
J	0.10	0.26	0.0040	0.0102
K	0.20	0.60	0.0079	0.0236
L	1.25	1.55	0.0493	0.0610
M	0 °	10 °	0 °	10 °
S	2.50	3.00	0.0985	0.1181

SOLDERING FOOTPRINT*

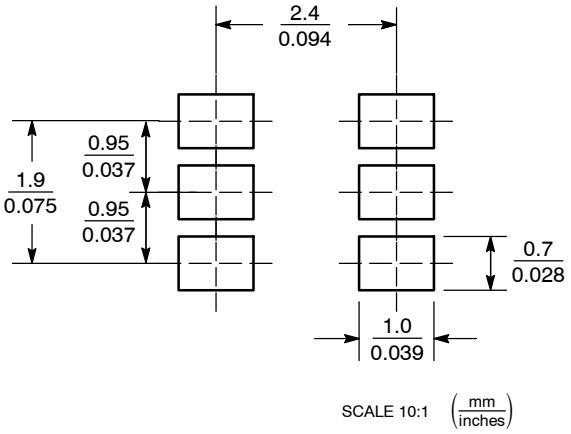

*For additional information on our Pb−Free strategy and soldering details, please download the ON Semiconductor Soldering and Mounting Techniques Reference Manual, SOLDERRM/D.

PACKAGE DIMENSIONS

QFN 2x2.2
SQL SUFFIX
PLASTIC PACKAGE
CASE 488−03
ISSUE E

TOP VIEW

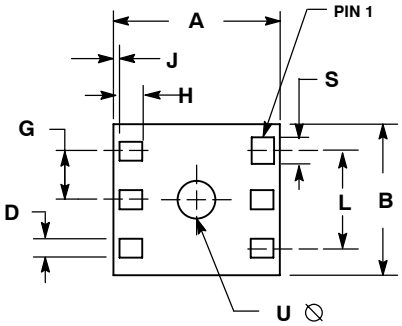

BOTTOM VIEW

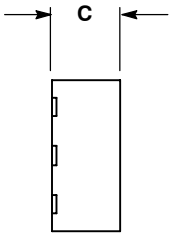

SIDE VIEW

NOTES:
1. DIMENSIONING AND TOLERANCING PER ANSI Y14.5M, 1982.
2. CONTROLLING DIMENSION: MILLIMETERS.
3. 488−01 OBSOLETE. NEW STANDARD IS 488−02.

	MILLIMETERS		INCHES	
DIM	MIN	MAX	MIN	MAX
A	2.18	2.23	0.086	0.088
B	1.98	2.03	0.078	0.080
C	0.88	0.93	0.035	0.037
D	0.23	0.28	0.009	0.011
G	0.650 BSC		0.026 BSC	
H	0.35	0.40	0.014	0.016
J	0.05	0.10	0.002	0.004
L	1.28	1.33	0.050	0.052
S	0.33	0.38	0.013	0.015
U	0.50 BSC		0.02 BSC	

SOLDERING FOOTPRINT

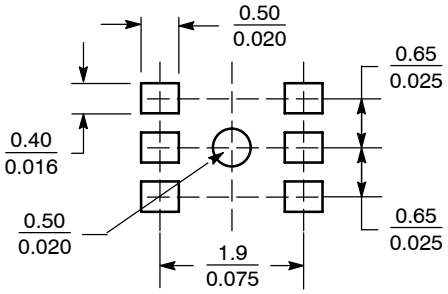

SCALE 10:1 $\left(\frac{\text{mm}}{\text{inches}}\right)$

PACKAGE DIMENSIONS

SC70−5/SC88A (SOT−353)
SQ SUFFIX
CASE 419A−02
ISSUE G

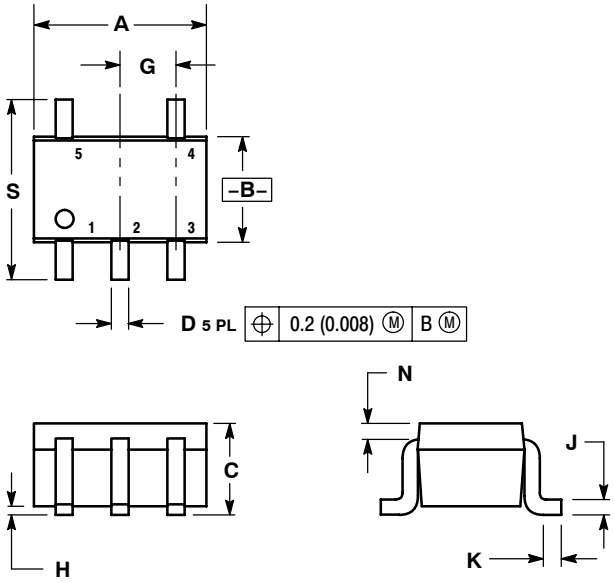

NOTES:
1. DIMENSIONING AND TOLERANCING PER ANSI Y14.5M, 1982.
2. CONTROLLING DIMENSION: INCH.
3. 419A−01 OBSOLETE. NEW STANDARD 419A−02.
4. DIMENSIONS A AND B DO NOT INCLUDE MOLD FLASH, PROTRUSIONS, OR GATE BURRS.

	INCHES		MILLIMETERS	
DIM	MIN	MAX	MIN	MAX
A	0.071	0.087	1.80	2.20
B	0.045	0.053	1.15	1.35
C	0.031	0.043	0.80	1.10
D	0.004	0.012	0.10	0.30
G	0.026 BSC		0.65 BSC	
H	---	0.004	---	0.10
J	0.004	0.010	0.10	0.25
K	0.004	0.012	0.10	0.30
N	0.008 REF		0.20 REF	
S	0.079	0.087	2.00	2.20

SOLDERING FOOTPRINT*

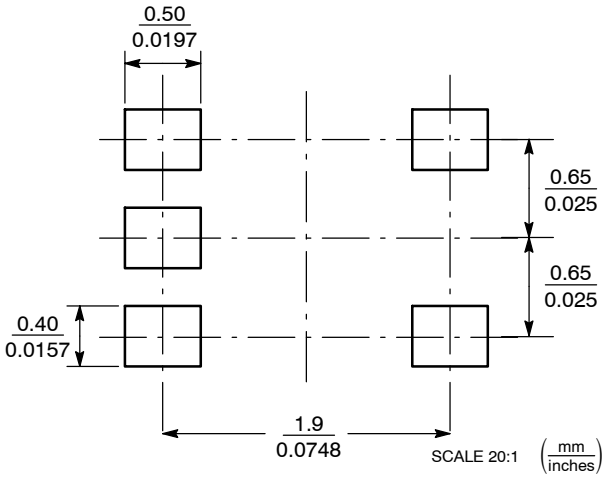

*For additional information on our Pb−Free strategy and soldering details, please download the ON Semiconductor Soldering and Mounting Techniques Reference Manual, SOLDERRM/D.

ON Semiconductor and are registered trademarks of Semiconductor Components Industries, LLC (SCILLC). SCILLC reserves the right to make changes without further notice to any products herein. SCILLC makes no warranty, representation or guarantee regarding the suitability of its products for any particular purpose, nor does SCILLC assume any liability arising out of the application or use of any product or circuit, and specifically disclaims any and all liability, including without limitation special, consequential or incidental damages. "Typical" parameters which may be provided in SCILLC data sheets and/or specifications can and do vary in different applications and actual performance may vary over time. All operating parameters, including "Typicals" must be validated for each customer application by customer's technical experts. SCILLC does not convey any license under its patent rights nor the rights of others. SCILLC products are not designed, intended, or authorized for use as components in systems intended for surgical implant into the body, or other applications intended to support or sustain life, or for any other application in which the failure of the SCILLC product could create a situation where personal injury or death may occur. Should Buyer purchase or use SCILLC products for any such unintended or unauthorized application, Buyer shall indemnify and hold SCILLC and its officers, employees, subsidiaries, affiliates, and distributors harmless against all claims, costs, damages, and expenses, and reasonable attorney fees arising out of, directly or indirectly, any claim of personal injury or death associated with such unintended or unauthorized use, even if such claim alleges that SCILLC was negligent regarding the design or manufacture of the part. SCILLC is an Equal Opportunity/Affirmative Action Employer. This literature is subject to all applicable copyright laws and is not for resale in any manner.

PUBLICATION ORDERING INFORMATION

LITERATURE FULFILLMENT:
Literature Distribution Center for ON Semiconductor
P.O. Box 61312, Phoenix, Arizona 85082−1312 USA
Phone: 480−829−7710 or 800−344−3860 Toll Free USA/Canada
Fax: 480−829−7709 or 800−344−3867 Toll Free USA/Canada
Email: orderlit@onsemi.com

N. American Technical Support: 800−282−9855 Toll Free USA/Canada

Japan: ON Semiconductor, Japan Customer Focus Center
2−9−1 Kamimeguro, Meguro−ku, Tokyo, Japan 153−0051
Phone: 81−3−5773−3850

ON Semiconductor Website: http://onsemi.com

Order Literature: http://www.onsemi.com/litorder

For additional information, please contact your local Sales Representative.

Copyright © Each Manufacturing Company.

All Datasheets cannot be modified without permission.

This datasheet has been download from :

www.AllDataSheet.com

100% Free DataSheet Search Site.

Free Download.

No Register.

Fast Search System.

www.AllDataSheet.com