查询STP55NF03L供应商

STP55NF03L

N-CHANNEL 30V - 0.01Ω - 55A TO-220
STripFET™ POWER MOSFET

TYPE	V_{DSS}	$R_{DS(on)}$	I_D
STP55NF03L	30 V	<0.013 Ω	55 A

- TYPICAL RDS(on) = 0.01 Ω
- OPTIMIMIZED FOR HIGH SWITCHING OPERATIONS
- LOW GATE CHARGE
- LOGIC LEVEL GATE DRIVE

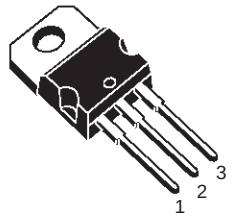

TO-220

DESCRIPTION

This Power MOSFET is the latest development of STMicroelectronics unique "Single Feature Size™" strip-based process. The resulting transistor shows extremely high packing density for low on-resistance, rugged avalanche characteristics and less critical alignment steps therefore a remarkable manufacturing reproducibility.

INTERNAL SCHEMATIC DIAGRAM

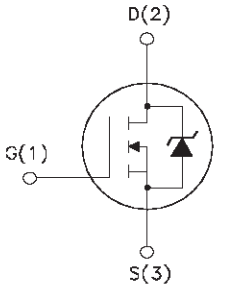

APPLICATIONS

- LOW VOLTAGE DC-DC CONVERTERS
- HIGH CURRENT, HIGH SPEED SWITCHING
- HIGH EFFICIENCY SWITCHING CIRCUITS

ABSOLUTE MAXIMUM RATINGS

Symbol	Parameter	Value	Unit
V_{DS}	Drain-source Voltage (V_{GS} = 0)	30	V
V_{DGR}	Drain-gate Voltage (R_{GS} = 20 kΩ)	30	V
V_{GS}	Gate- source Voltage	±15	V
I_D	Drain Current (continuos) at T_C = 25°C	55	A
I_D	Drain Current (continuos) at T_C = 100°C	39	A
I_{DM}(•)	Drain Current (pulsed)	220	A
P_{tot}	Total Dissipation at T_C = 25°C	80	W
	Derating Factor	0.53	W/°C
T_{stg}	Storage Temperature	–60 to 175	°C
T_j	Max. Operating Junction Temperature	175	°C

(•)Pulse width limited by safe operating area.

THERMAL DATA

$R_{thj-case}$	Thermal Resistance Junction-case	Max	1.875	°C/W
$R_{thj-amb}$	Thermal Resistance Junction-ambient	Max	62.5	°C/W
$R_{thc-sink}$	Thermal Resistance Case-sink	Typ	0.5	°C/W
T_j	Maximum Lead Temperature For Soldering Purpose		300	°C

ELECTRICAL CHARACTERISTICS (T_{case} = 25 °C unless otherwise specified)

OFF

Symbol	Parameter	Test Conditions	Min.	Typ.	Max.	Unit
$V_{(BR)DSS}$	Drain-source Breakdown Voltage	I_D = 250 µA V_{GS} = 0	30			V
I_{DSS}	Zero Gate Voltage Drain Current (V_{GS} = 0)	V_{DS} = Max Rating V_{DS} = Max Rating T_C = 125 °C			1 10	µA µA
I_{GSS}	Gate-body Leakage Current (V_{DS} = 0)	V_{GS} = ±15 V			±100	nA

ON (*)

Symbol	Parameter	Test Conditions	Min.	Typ.	Max.	Unit
$V_{GS(th)}$	Gate Threshold Voltage	V_{DS} = V_{GS} I_D = 250 µA	1			V
$R_{DS(on)}$	Static Drain-source On Resistance	V_{GS} = 10 V I_D = 27.5 A V_{GS} = 4.5 V I_D = 27.5 A		0.01 0.013	0.013 0.020	Ω Ω
$I_{D(on)}$	On State Drain Current	V_{DS} > $I_{D(on)}$ x $R_{DS(on)max}$ V_{GS} = 10 V	55			A

DYNAMIC

Symbol	Parameter	Test Conditions	Min.	Typ.	Max.	Unit
g_{fs} (*)	Forward Transconductance	V_{DS}>$I_{D(on)}$ x $R_{DS(on)max}$ I_D=27.5 A		30		S
C_{iss} C_{oss} C_{rss}	Input Capacitance Output Capacitance Reverse Transfer Capacitances	V_{DS} = 25V f = 1 MHz V_{GS} = 0		1265 435 115		pF pF pF

ELECTRICAL CHARACTERISTICS (continued)

SWITCHING ON

Symbol	Parameter	Test Conditions	Min.	Typ.	Max.	Unit
$t_{d(on)}$ t_r	Turn-on Delay Time Rise Time	V_{DD} = 15 V I_D = 27.5 A R_G = 4.7 Ω V_{GS} = 4.5 V (see test circuit, Figure 3)		28 400		ns ns
Q_g Q_{gs} Q_{gd}	Total Gate Charge Gate-Source Charge Gate-Drain Charge	V_{DD}=24V I_D=55A V_{GS}=4.5V		20 7 10	27	nC nC nC

SWITCHING OFF

Symbol	Parameter	Test Conditions	Min.	Typ.	Max.	Unit
$t_{d(off)}$ t_f	turn-off Delay Time Fall Time	V_{DD} = 15 V I_D = 27.5 A R_G = 4.7 Ω V_{GS} = 4.5 V (see test circuit, Figure 3)		25 50		ns ns

SOURCE DRAIN DIODE

Symbol	Parameter	Test Conditions	Min.	Typ.	Max.	Unit
I_{SD} I_{SDM} (•)	Source-drain Current Source-drain Current (pulsed)				55 220	A A
V_{SD} (*)	Forward On Voltage	I_{SD} = 55 A V_{GS} = 0			1.3	V
t_{rr} Q_{rr} I_{RRM}	Reverse Recovery Time Reverse Recovery Charge Reverse Recovery Current	I_{SD} = 55 A di/dt = 100 A/µs V_{DD} = 30 V T_j = 150 °C (see test circuit, Figure 5)		70 160 4.5		ns nC A

(*)Pulsed: Pulse duration = 300 µs, duty cycle 1.5 %.
(•)Pulse width limited by safe operating area.

Safe Operating Area

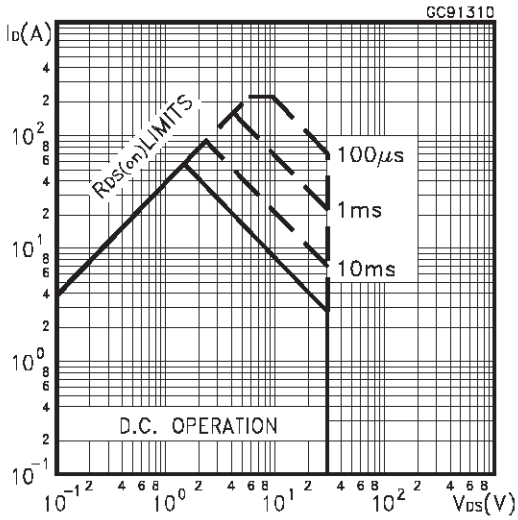

Thermal Impedance

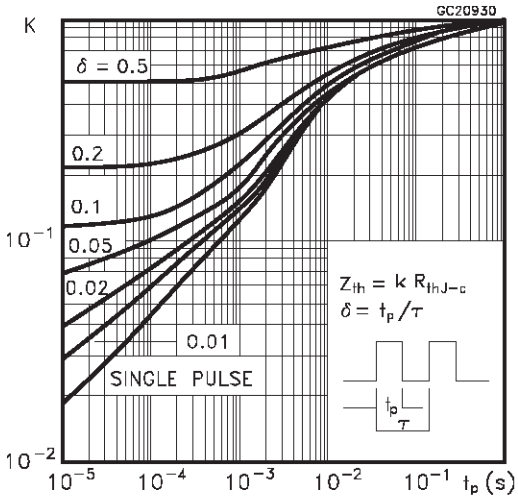

Output Characteristics

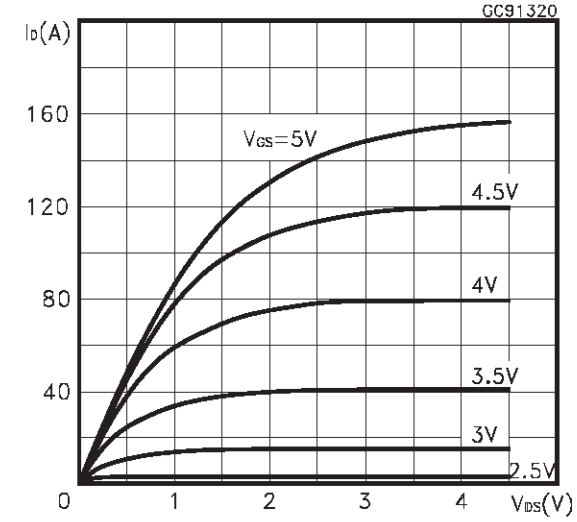

Transfer Characteristics

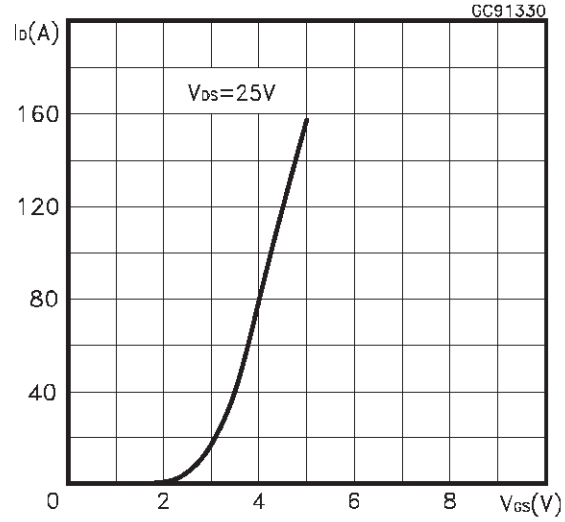

Transconductance

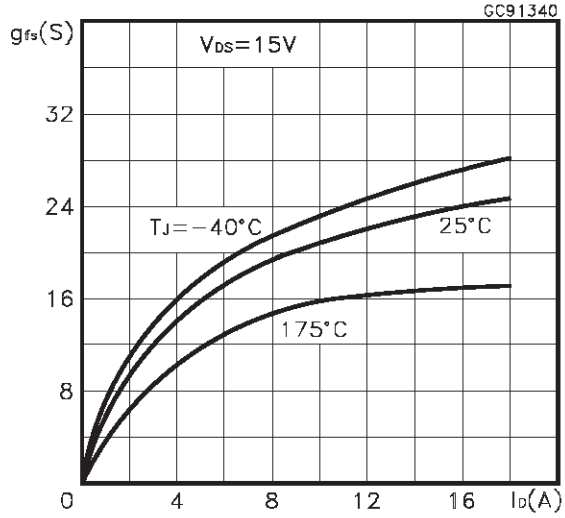

Static Drain-source On Resistance

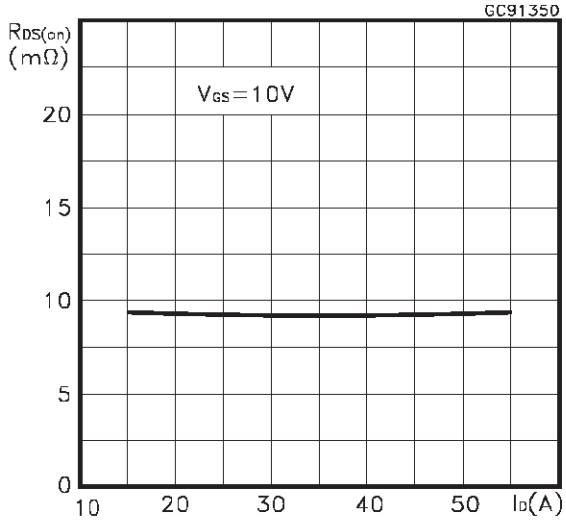

Gate Charge vs Gate-source Voltage

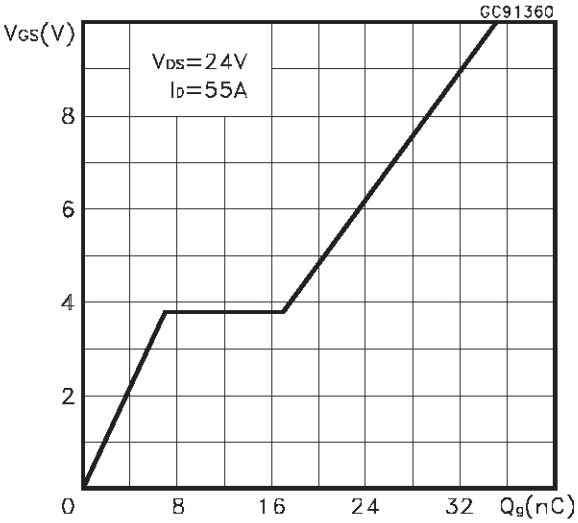

Capacitance Variations

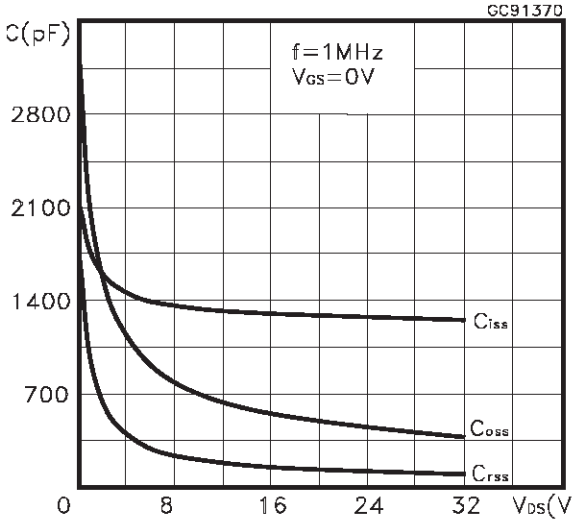

Normalized Gate Threshold Voltage vs Temperature

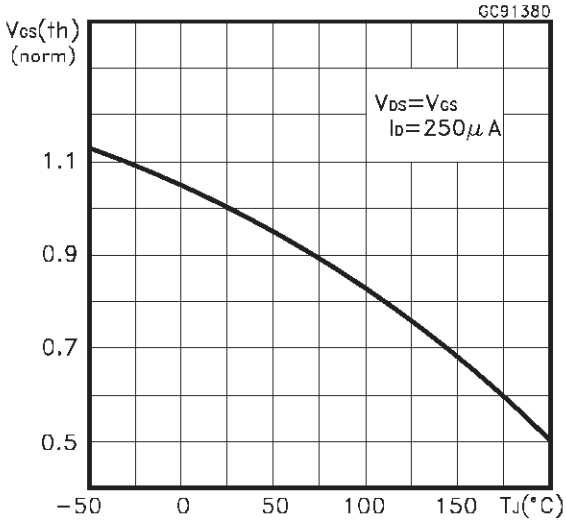

Normalized On Resistance vs Temperature

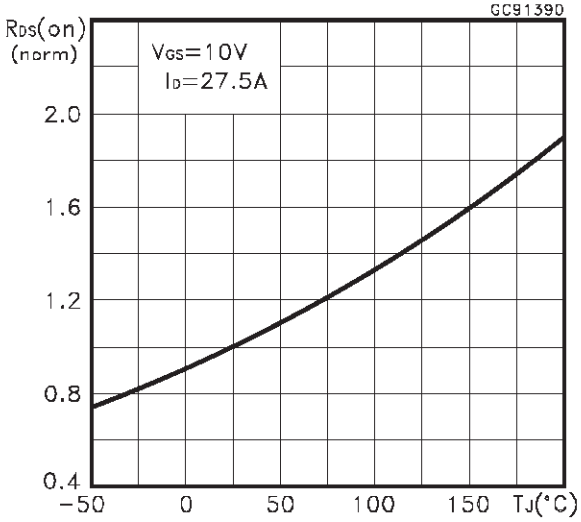

Source-drain Diode Forward Characteristics

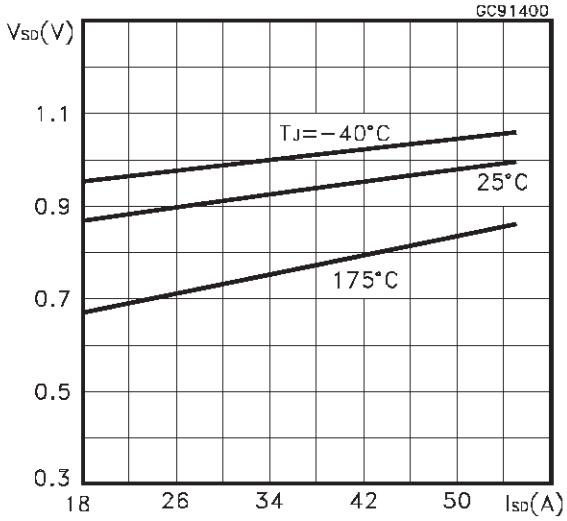

Normalized Breakdown Voltage vs Temperature

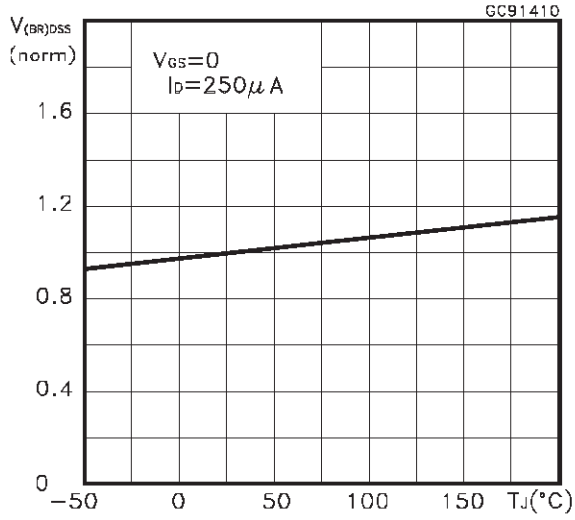

Fig. 1: Unclamped Inductive Load Test Circuit

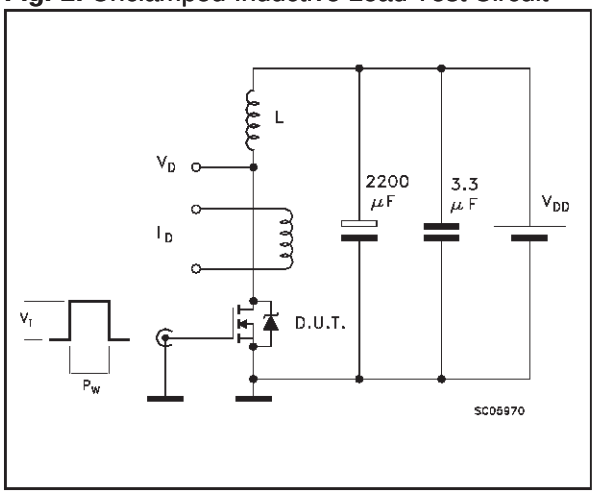

Fig. 2: Unclamped Inductive Waveform

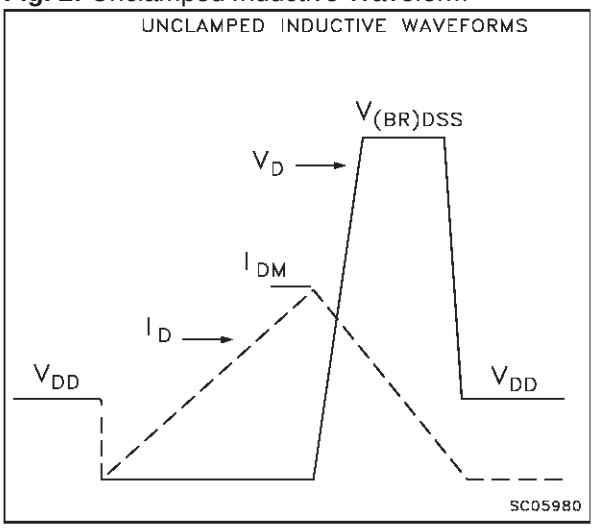

Fig. 3: Switching Times Test Circuits For Resistive Load

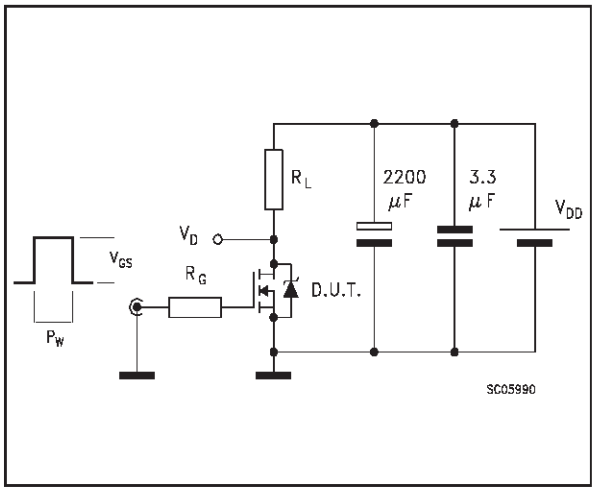

Fig. 4: Gate Charge test Circuit

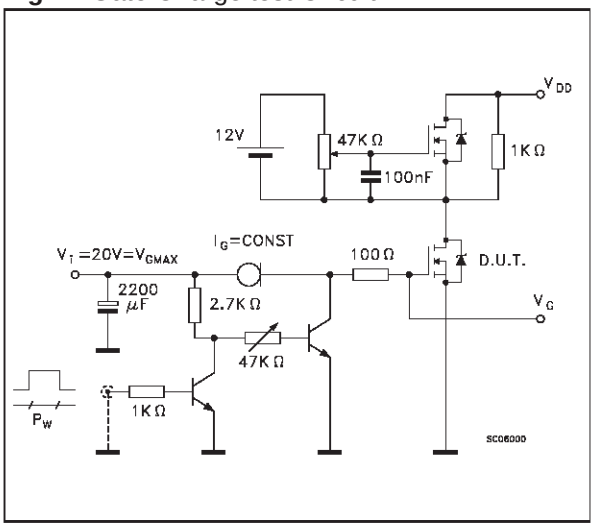

Fig. 5: Test Circuit For Inductive Load Switching And Diode Recovery Times

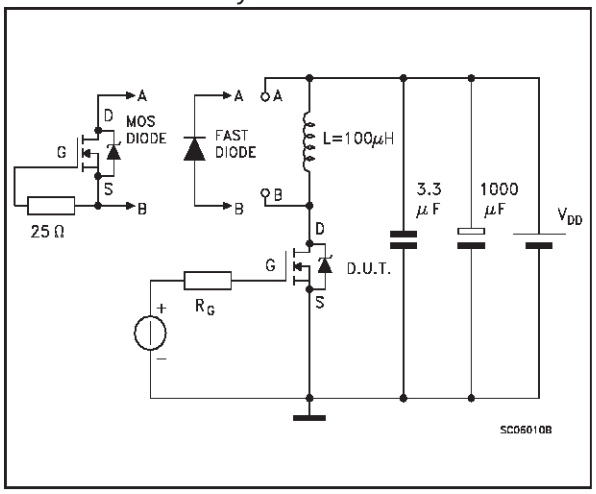

TO-220 MECHANICAL DATA

DIM.	mm			inch		
	MIN.	TYP.	MAX.	MIN.	TYP.	MAX.
A	4.40		4.60	0.173		0.181
C	1.23		1.32	0.048		0.051
D	2.40		2.72	0.094		0.107
D1		1.27			0.050	
E	0.49		0.70	0.019		0.027
F	0.61		0.88	0.024		0.034
F1	1.14		1.70	0.044		0.067
F2	1.14		1.70	0.044		0.067
G	4.95		5.15	0.194		0.203
G1	2.4		2.7	0.094		0.106
H2	10.0		10.40	0.393		0.409
L2		16.4			0.645	
L4	13.0		14.0	0.511		0.551
L5	2.65		2.95	0.104		0.116
L6	15.25		15.75	0.600		0.620
L7	6.2		6.6	0.244		0.260
L9	3.5		3.93	0.137		0.154
DIA.	3.75		3.85	0.147		0.151

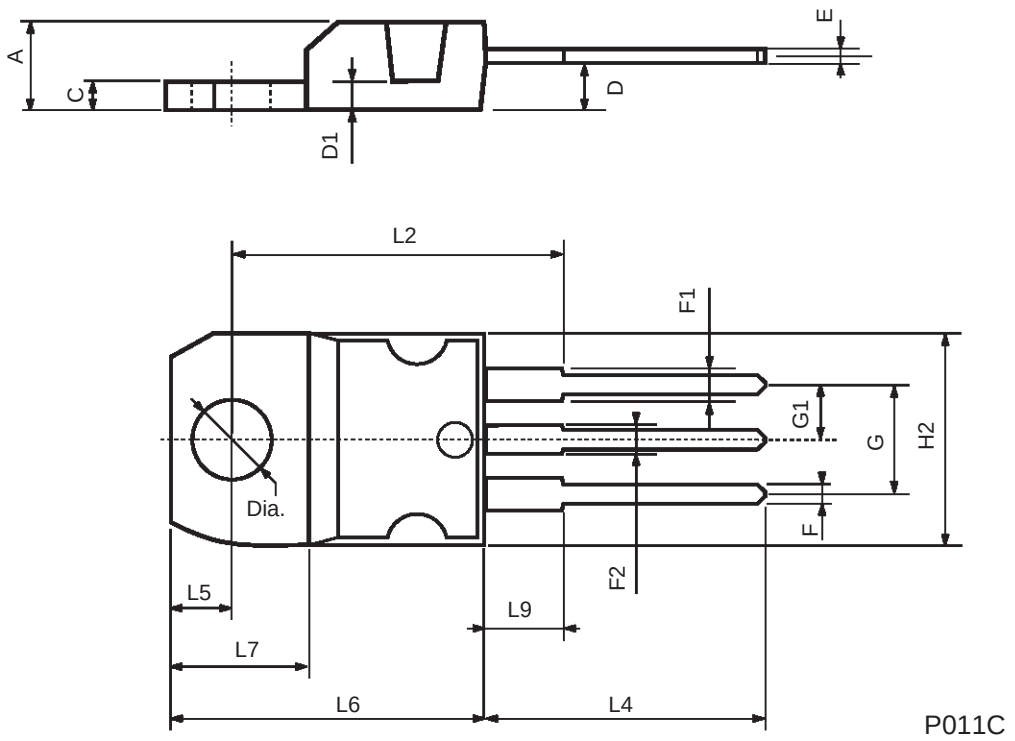

Information furnished is believed to be accurate and reliable. However, STMicroelectronics assumes no responsibility for the consequences of use of such information nor for any infringement of patents or other rights of third parties which may result from its use. No license is granted by implication or otherwise under any patent or patent rights of STMicroelectronics. Specifications mentioned in this publication are subject to change without notice. This publication supersedes and replaces all information previously supplied. STMicroelectronics products are not authorized for use as critical components in life support devices or systems without express written approval of STMicroelectronics.

The ST logo is registered trademark of STMicroelectronics
© 2001 STMicroelectronics - All Rights Reserved

All other names are the property of their respective owners.

STMicroelectronics GROUP OF COMPANIES
Australia - Brazil - China - Finland - France - Germany - Hong Kong - India - Italy - Japan - Malaysia - Malta - Morocco - Singapore - Spain - Sweden - Switzerland - United Kingdom - U.S.A.

http://www.st.com

WWW.ALLDATASHEET.COM

Copyright © Each Manufacturing Company.

All Datasheets cannot be modified without permission.

This datasheet has been download from :

www.AllDataSheet.com

100% Free DataSheet Search Site.

Free Download.

No Register.

Fast Search System.

www.AllDataSheet.com