查询NJG1307R供应商 捷多邦，专业PCB打样工厂，24小时加急出货

DRIVER AMPLIFIER GaAs MMIC

■GENERAL DESCRIPTION

NJG1307R is a GaAs MMIC designed mainly for driver amplifier of Cellular Phone.

This is an amplifier which has high gain of 33dB and variable gain with 40dB dynamic range.

NJG1307R features stable VSWR and low current operation.

■ PACKAGE OUTLINE

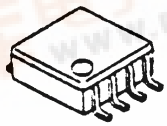

NJG1307R

■FEATURES

●Single and low voltage operation	+3.0V typ.
●Low current consumption	25mA typ. @P_{OUT}= 8dBm
●Small signal gain	33dB typ. @f= 938MHz
	30dB typ. @f= 1441MHz
	25dB typ. @f= 1.9GHz
●Pout at 1dB compression point	11dBm typ. @f= 938MHz
	10dBm typ. @f= 1441MHz
	8dBm typ. @f= 1.9GHz
●Wide Variable range	40dB typ.
●Package	VSP8

■PIN CONFIGURATION

R TYPE

(TOP VIEW)

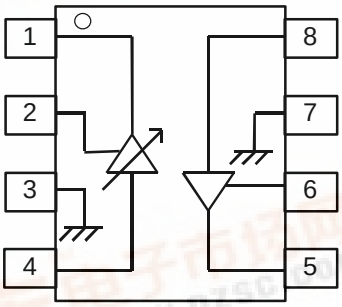

Pin Connection

1. RF_{out1}
2. V_{CONT}
3. GND1
4. RF_{in1}
5. RF_{out2}
6. GND2
7. GND1
8. RF_{in2}

找PDF 维库一下 pdf.dzsc.com

■ABSOLUTE MAXIMUM RATINGS

(T_a=+25°C, Z_s=Z_l=50Ω)

PARAMETER	SYMBOL	CONDITIONS	RATINGS	UNITS
Drain Voltage	V_{DD}		6	V
Gain Control Voltage	V_{CONT}	V_{DD}=3V	3	V
Input Power	P_{in}	V_{DD}=3V, V_{CONT}=2V	10	dBm
Operating Power	P_D	At on PCB board	320	mW
Operating Temperature	T_{opr}		-40 ~ 85	°C
Storage Temperature	T_{stg}		-55 ~ 150	°C

■ELECTRICAL CHARACTERISTICS 1 (Application1 PDC800MHz)

(T_a=25°C, Z_s=Z_l=50Ω, V_{DD}=3.0V, f=938MHz)

PARAMETER	SYMBOL	CONDITIONS	MIN	TYP	MAX	UNITS
Operating Frequency	freq		915	938	960	MHz
Drain Voltage	V_{DD}		2.7	3.0	5.0	V
Operating Current	I_{DD}	V_{CONT}=2V, P_{out}=+8dBm	-	25	35	mA
Small Signal Gain	Gain	V_{CONT}=2V, P_{in}=-25dBm	29	33	-	dB
Gain Flatness	G_{flat}	V_{CONT}=2V, P_{in}=-25dBm f=915~960MHz	-	0.5	-	dB
Gain Control Range	G_{cont}	V_{CONT}=0.1~2.0V, P_{in}=-25dBm	35	40	-	dB
Pout at 1dB Gain Compression point	P_{-1dB}	V_{CONT}=2V	-	+11	-	dBm
Adjacent Channel Leakage Power	P_{acp}	V_{CONT}=2V, P_{out}=+8dBm offset=50kHz, P_{in}; π/4 DQPSK	-	-60	-55	dBc
RF_{in1} Port VSWR	$VSWR_{i1}$	V_{CONT}=2V	-	1.5	-	
RF_{out1} Port VSWR	$VSWR_{o1}$	V_{CONT}=2V	-	1.5	-	
RF_{in2} Port VSWR	$VSWR_{i2}$	V_{CONT}=2V	-	1.5	-	
RF_{out2} Port VSWR	$VSWR_{o2}$	V_{CONT}=2V	-	1.5	-	

■ELECTRICAL CHARACTERISTICS 2 (Application 2 PDC1.5GHz)

(T_a=25°C, Z_s=Z_l=50Ω, V_{DD}=3.0V, f=1441MHz)

PARAMETER	SYMBOL	CONDITIONS	MIN	TYP	MAX	UNITS
Operating Frequency	freq		1429	1441	1453	MHz
Drain Voltage	V_{DD}		2.7	3.0	5.0	V
Operating Current	I_{DD}	V_{CONT}=2V, P_{out}=+8dBm	-	25	35	mA
Small Signal Gain	Gain	V_{CONT}=2V, P_{in}=-25dBm	26	30	-	dB
Gain Flatness	G_{flat}	V_{CONT}=2V, P_{in}=-25dBm f=1429~1453MHz	-	0.5	-	dB
Gain Control Range	G_{cont}	V_{CONT}=0.1~2.0V, P_{in}=-25dBm	35	40	-	dB
Pout at 1dB Gain Compression point	P_{-1dB}	V_{CONT}=2V	-	+10	-	dBm
Adjacent Channel Leakage Power	P_{acp}	V_{CONT}=2V, P_{out}=+8dBm offset=50kHz, P_{in};π/4 DQPSK	-	-60	-55	dBc
RF_{in1}PortVSWR	$VSWR_{i1}$	V_{CONT}=2V	-	1.5	-	
RF_{out1}PortVSWR	$VSWR_{o1}$	V_{CONT}=2V	-	1.5	-	
RF_{in2}PortVSWR	$VSWR_{i2}$	V_{CONT}=2V	-	1.5	-	
RF_{out2}PortVSWR	$VSWR_{o2}$	V_{CONT}=2V	-	1.5	-	

■ELECTRICAL CHARACTERISTICS 3 (Application 3 PHS1.9GHz)

(T_a=25°C, Z_s=Z_l=50Ω, V_{DD}=3.0V, f=1.9GHz)

PARAMETER	SYMBOL	CONDITIONS	MIN	TYP	MAX	UNITS
Operating Frequency	freq		1.89	1.9	1.92	GHz
Drain Voltage	V_{DD}		2.7	3.0	5.0	V
Operating Current	I_{DD}	V_{CONT}=2V, P_{out}=+8dBm	-	25	35	mA
Small Signal Gain	Gain	V_{CONT}=2V, P_{in}=-25dBm	21	25	-	dB
Gain Flatness	G_{flat}	V_{CONT}=2V, P_{in}=-25dBm f=1.89~1.92GHz	-	0.5	-	dB
Gain Control Range	G_{cont}	V_{CONT}=0.1~2.0V, P_{in}=-25dBm	35	40	-	dB
Pout at 1dB Gain Compression point	P_{-1dB}	V_{CONT}=2V	-	+8	-	dBm
Adjacent Channel Leakage Power	P_{acp}	V_{CONT}=2V, P_{out}=+8dBm offset=600kHz, P_{in};π/4 DQPSK	-	-65	-60	dBc
RF_{in1} Port VSWR	$VSWR_{i1}$	V_{CONT}=2V	-	1.5	-	
RF_{out1} Port VSWR	$VSWR_{o1}$	V_{CONT}=2V	-	1.5	-	
RF_{in2} Port VSWR	$VSWR_{i2}$	V_{CONT}=2V	-	1.5	-	
RF_{out2} Port VSWR	$VSWR_{o2}$	V_{CONT}=2V	-	1.5	-	

■TERMINAL INFORMATION

No.	SYMBOL	DESCRIPTIONS
1	RF_{out1}	RF signal output terminal from Wide-Band variable gain Amplifier. And this terminal is also the voltage supply terminal of wide-band variable gain amplifier, therefore should be supplied voltage through the choke coil.
2	V_{CONT}	Voltage input terminal or gain control circuit.
3	GND1	Ground terminal. No.3 and No.7 pins connected inside IC.
4	RF_{in1}	RF signal input terminal to wide-band variable gain amplifier.
5	RF_{out2}	RF signal output terminal from driver amplifier. And this terminal is also the voltage supply terminal of driver amplifier, therefore should be supplied voltage through the choke coil.
6	GND2	Ground terminal. However GND1 terminal must not be connected to GND2, please use different through hole to connect ground plane. (Please see RECOMMENDED PCB DESIGN)
7	GND1	Ground terminal.
8	RF_{in2}	RF signal input terminal to driver amplifier.

■TYPICAL CHARACTERISTICS1 (Application 1 PDC800MHz)

S21,S11,S22,S12 vs. FREQUENCY

(V_{DD}=3V, V_{CONT}=2V)

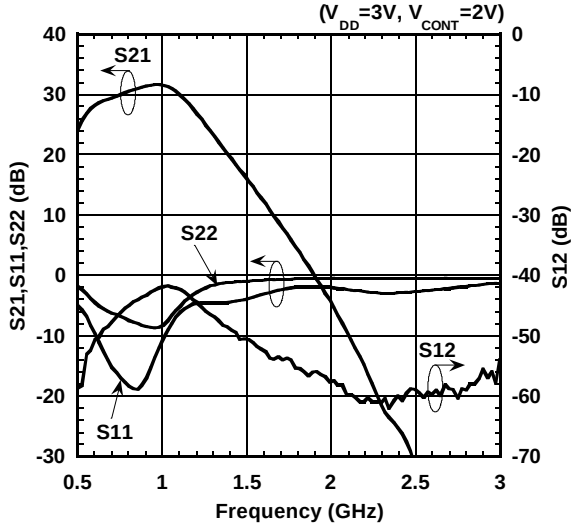

GAIN, VSWR vs. V_{CONT}

(V_{DD}=3V, f=938MHz)

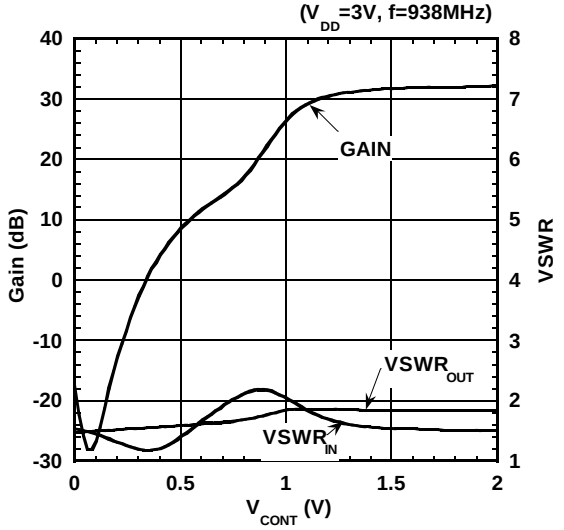

OUTPUT POWER, I_{DD} vs. INPUT POWER

(V_{DD}=3V, V_{CONT}=2V, f=938MHz)

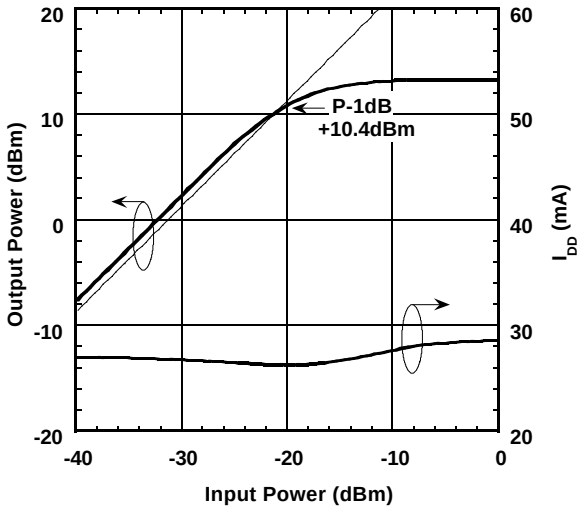

ACP, RMS VECTOR ERROR vs. OUTPUT POWER

(V_{DD}=3V, V_{CONT}=2V, f=938MHz, offset=50kHz)

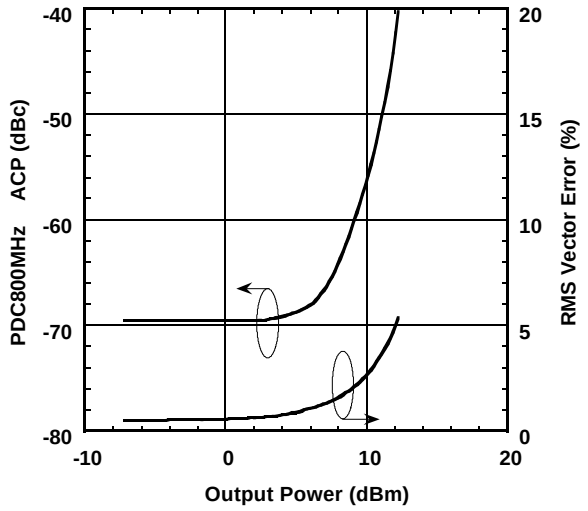

ACP, RMS VECTOR ERROR vs. V_{CONT}

(V_{DD}=3V, Input Power=-25dBm, f=938MHz, offset=50kHz)

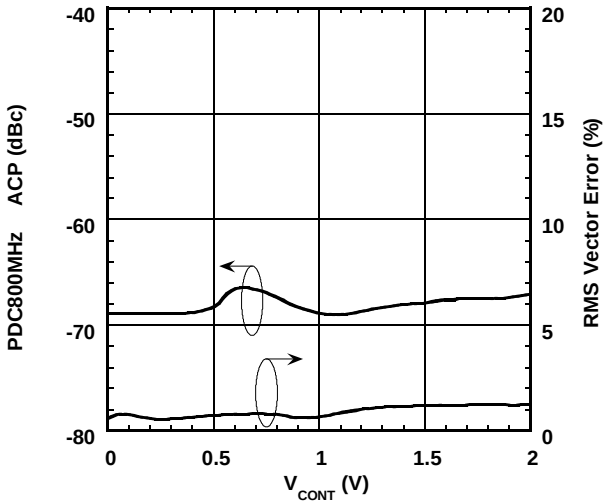

ACP, RMS VECTOR ERROR vs. V_{CONT}

(V_{DD}=3V, Output Power=+8dBm, f=938MHz, offset=50kHz)

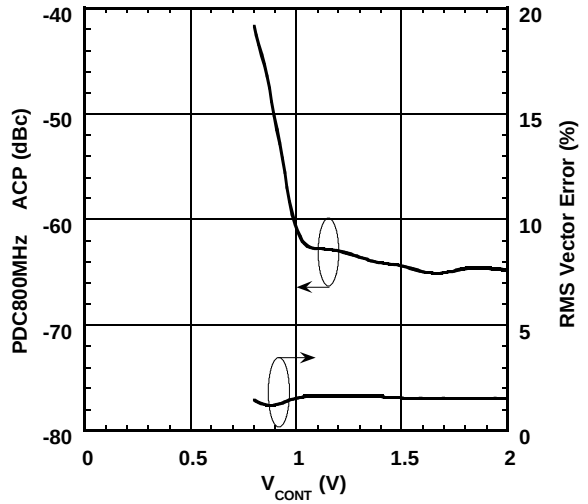

■TYPICAL CHARACTERISTICS1 (Application1 PDC800MHz)

GAIN vs. TEMPERATURE

(V_{DD}=3V, V_{CONT}=2V, f=938MHz, P_{in}=-25dBm)

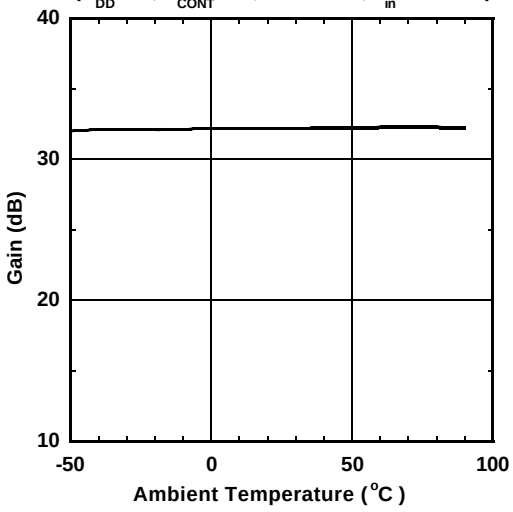

I_{DD} vs. TEMPERATURE

(V_{DD}=3V, V_{CONT}=2V, f=938MHz, P_{out}=+8dBm)

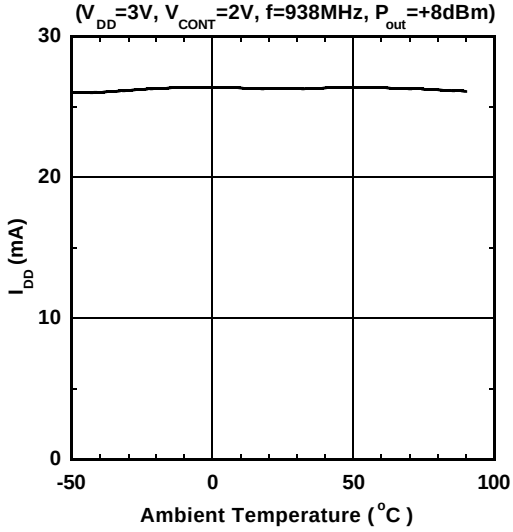

P_{-1dB}, P_{sat} vs. TEMPERATURE

(V_{DD}=3V, V_{CONT}=2V, f=938MHz, P_{sat}:P_{in}=0dBm)

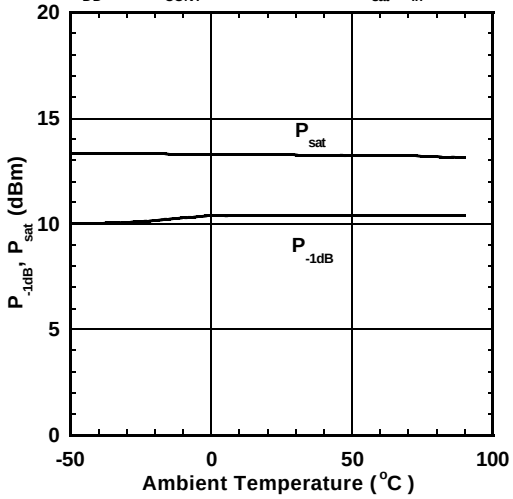

ACP, RMS VECTOR ERROR vs. TEMPERATURE

(V_{DD}=3V, V_{CONT}=2V, f=938MHz, offset=50kHz, P_{out}=+8dBm)

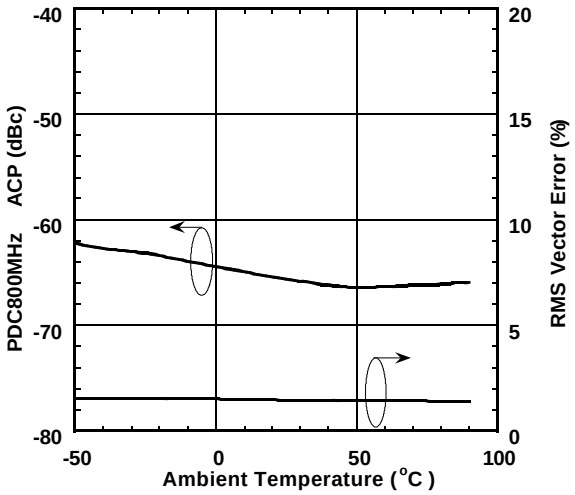

■TYPICAL CHARACTERISTICS 2 (Application 2 PDC1.5GHz)

S21,S11,S22,S12 vs. FREQUENCY

(V_{DD}=3V, V_{CONT}=2V)

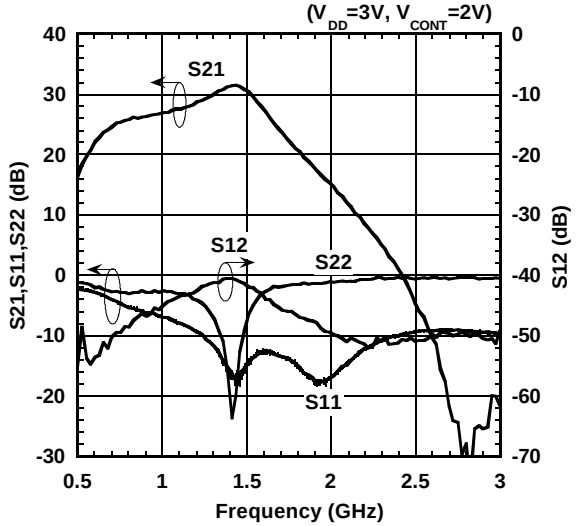

GAIN, VSWR vs. V_{CONT}

(V_{DD}=3V,f=1441MHz)

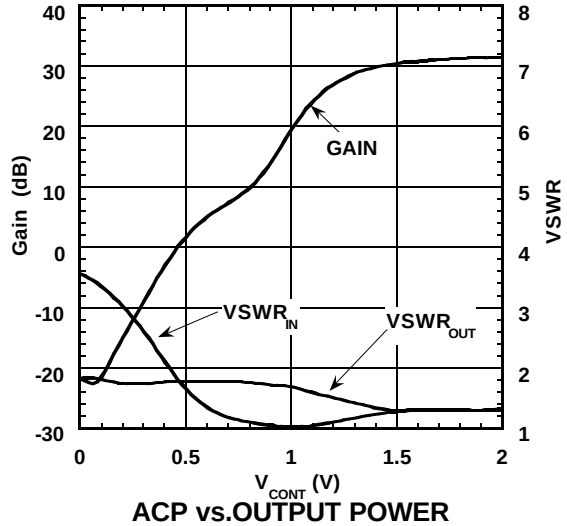

OUTPUT POWER, I_{DD} vs. INPUT POWER

(V_{DD}=3V, V_{CONT}=2V, f=1441MHz)

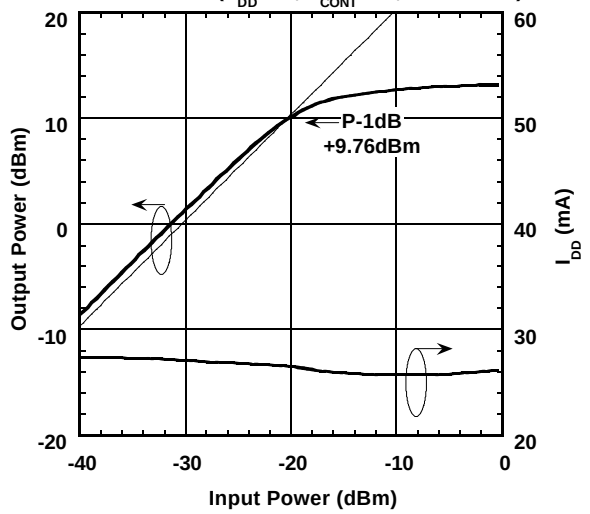

ACP vs.OUTPUT POWER

(V_{DD}=3V, V_{CONT}=2V, f=1441MHz,offset=50kHz)

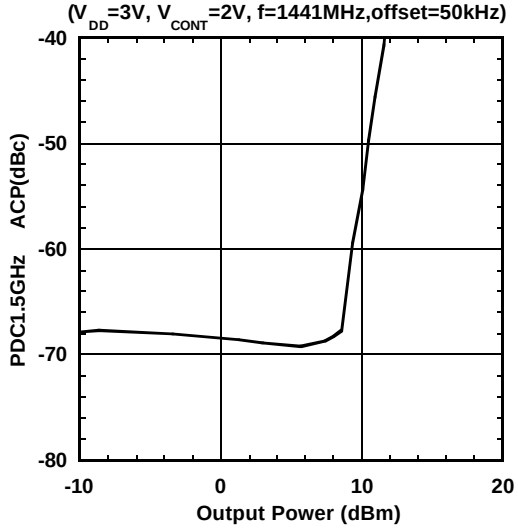

ACP vs.V_{cont}

(V_{DD}=3V, Input Power=-25dBm, f=1441MHz, offset=50kHz)

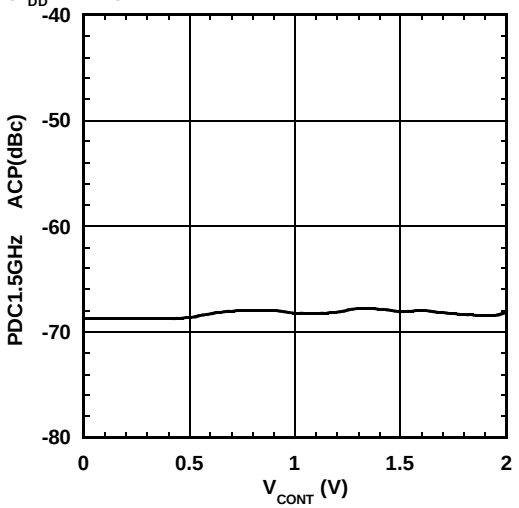

ACP vs.V_{cont}

(V_{DD}=3V, Output Power=+8dBm, f=1441MHz, offset=50kHz)

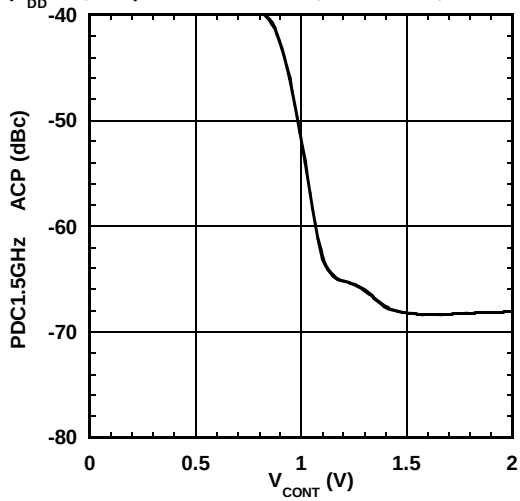

■TYPICAL CHARACTERISTICS 2 (Application 2 PDC1.5GHz)

GAIN vs. TEMPERATURE

(V_{DD}=3V, V_{CONT}=2V, f=1441MHz, P_{in}=-25dBm)

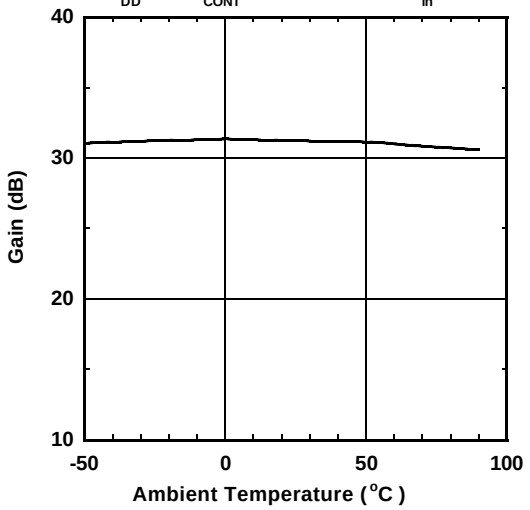

I_{DD} vs. TEMPERATURE

(V_{DD}=3V, V_{CONT}=2V, f=1441MHz, P_{out}=+8dBm)

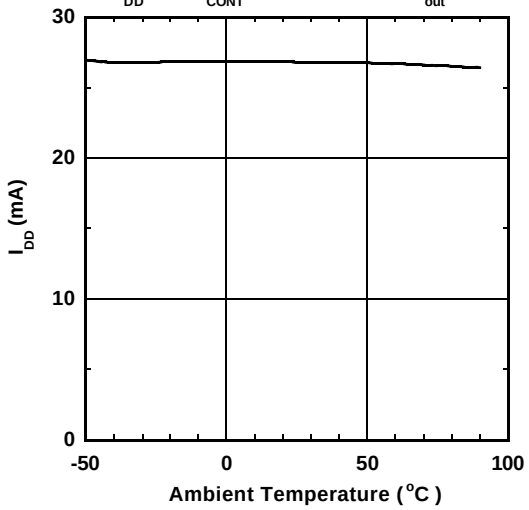

P_{-1dB}, P_{sat} vs. TEMPERATURE

(V_{DD}=3V, V_{CONT}=2V, f=1441MHz, P_{sat}:P_{in}=0dBm)

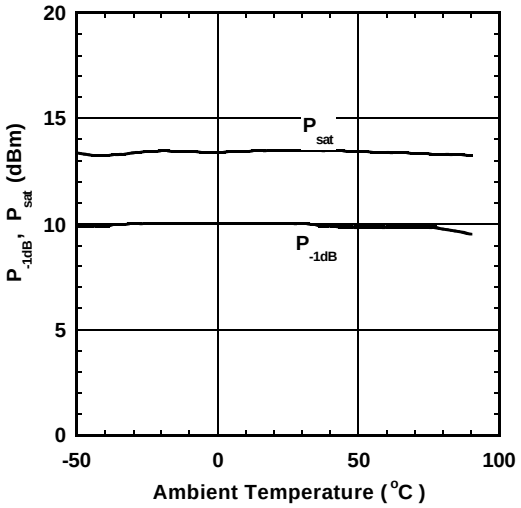

ACP vs. TEMPERATURE

(V_{DD}=3V, V_{CONT}=2V, f=1441MHz, offset=50kHz, P_{out}=+8dBm)

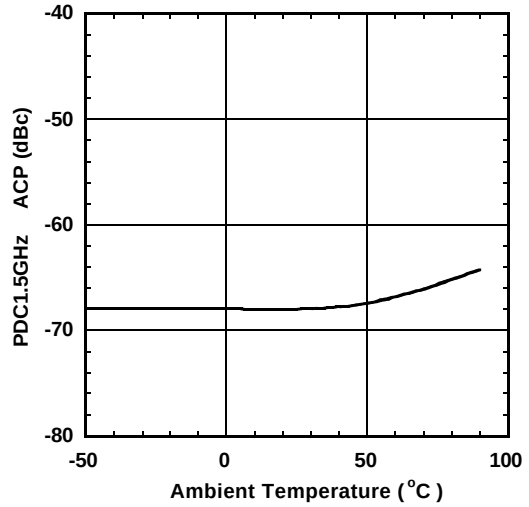

■TYPICAL CHARACTERISTICS 3 (Application 3 PHS1.9GHz)

S21,S11,S22,S12 vs. FREQUENCY

(V_{DD}=3V, V_{CONT}=2V)

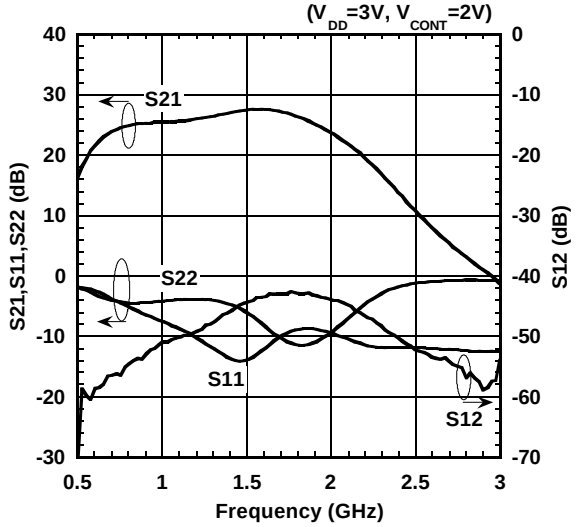

GAIN, VSWR vs. V_{CONT}

(V_{DD}=3V,f=1.9GHz)

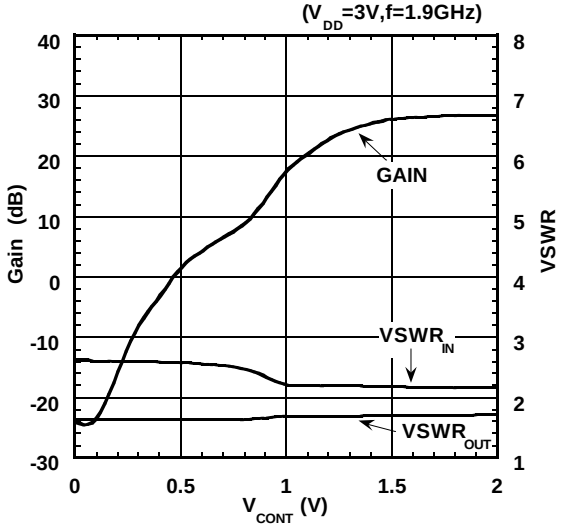

OUTPUT POWER, I_{DD} vs. INPUT POWER

(V_{DD}=3V, V_{CONT}=2V, f=1.9GHz)

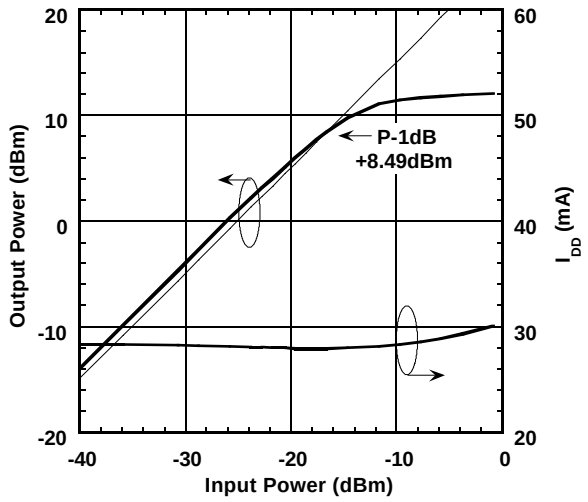

ACP vs.OUTPUT POWER

(V_{DD}=3V, V_{CONT}=2V, f=1.9GHz,offset=600kHz)

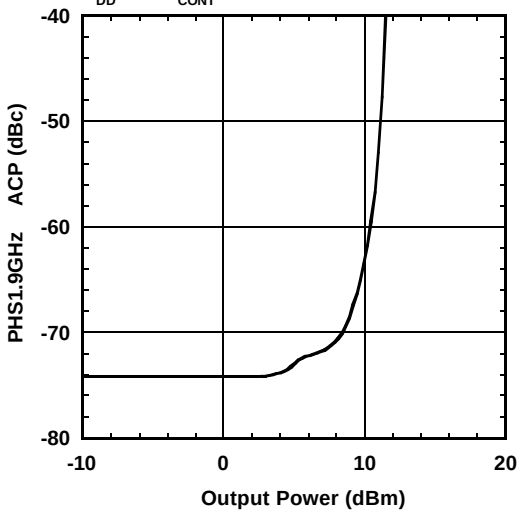

ACP vs. V_{CONT}

(V_{DD}=3V, Input Power=-25dBm, f=1.9GHz, offset=600kHz)

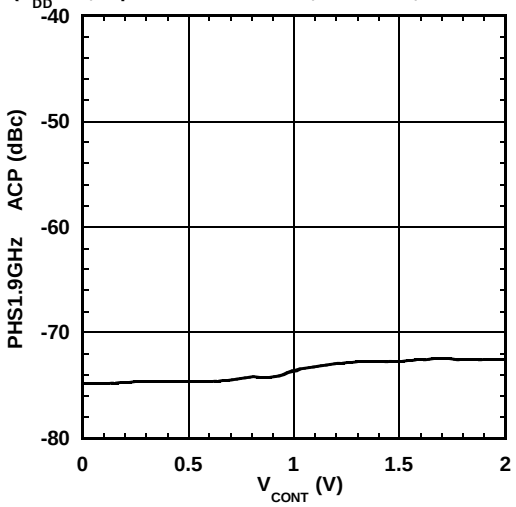

ACP vs. V_{CONT}

(V_{DD}=3V, Output Power=+8dBm, f=1.9GHz, offset=600kHz)

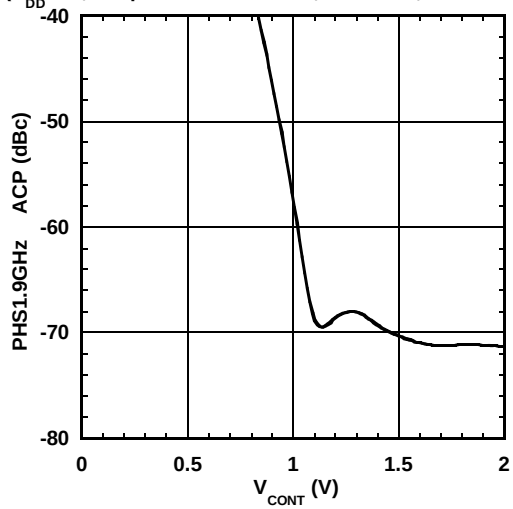

■TYPICAL CHARACTERISTICS 3 (Application 3 PHS1.9GHz)

GAIN vs. TEMPERATURE

(V_{DD}=3V, V_{CONT}=2V, f=1.9GHz, P_{in}=-25dBm)

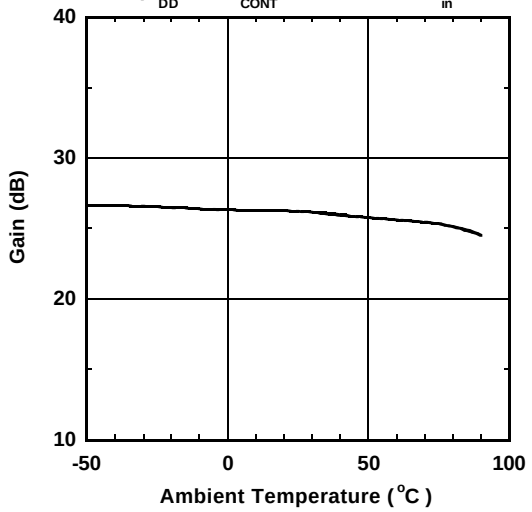

I_{DD} vs. TEMPERATURE

(V_{DD}=3V, V_{CONT}=2V, f=1.9GHz, P_{out}=+8dBm)

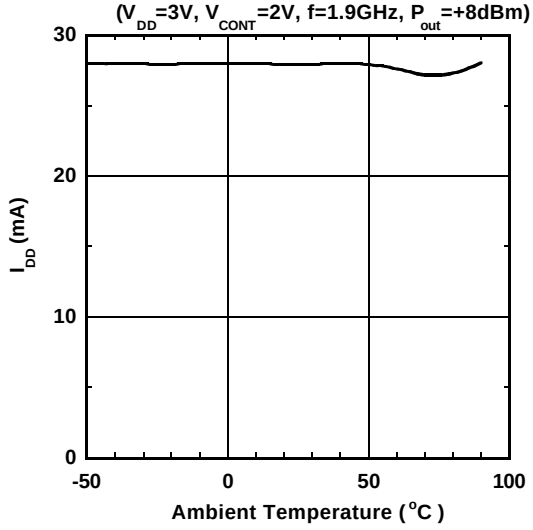

P_{-1dB}, P_{sat} vs. TEMPERATURE

(V_{DD}=3V, V_{CONT}=2V, f=1.9GHz, P_{sat}:P_{in}=0dBm)

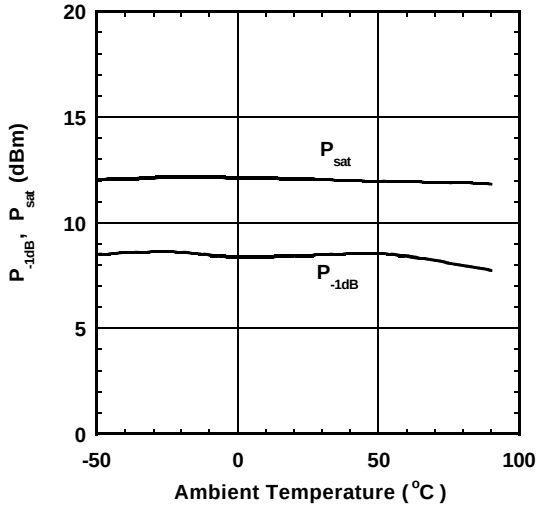

ACP vs. TEMPERATURE

(V_{DD}=3V, V_{CONT}=2V, f=1.9GHz, offset=600kHz, P_{out}=+8dBm)

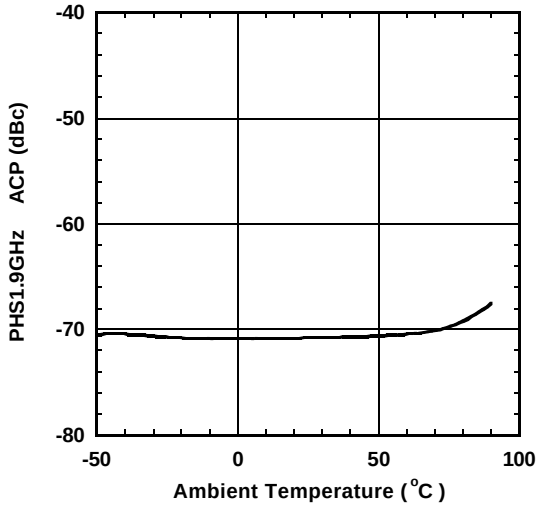

■EQUIVALENT CIRCUIT

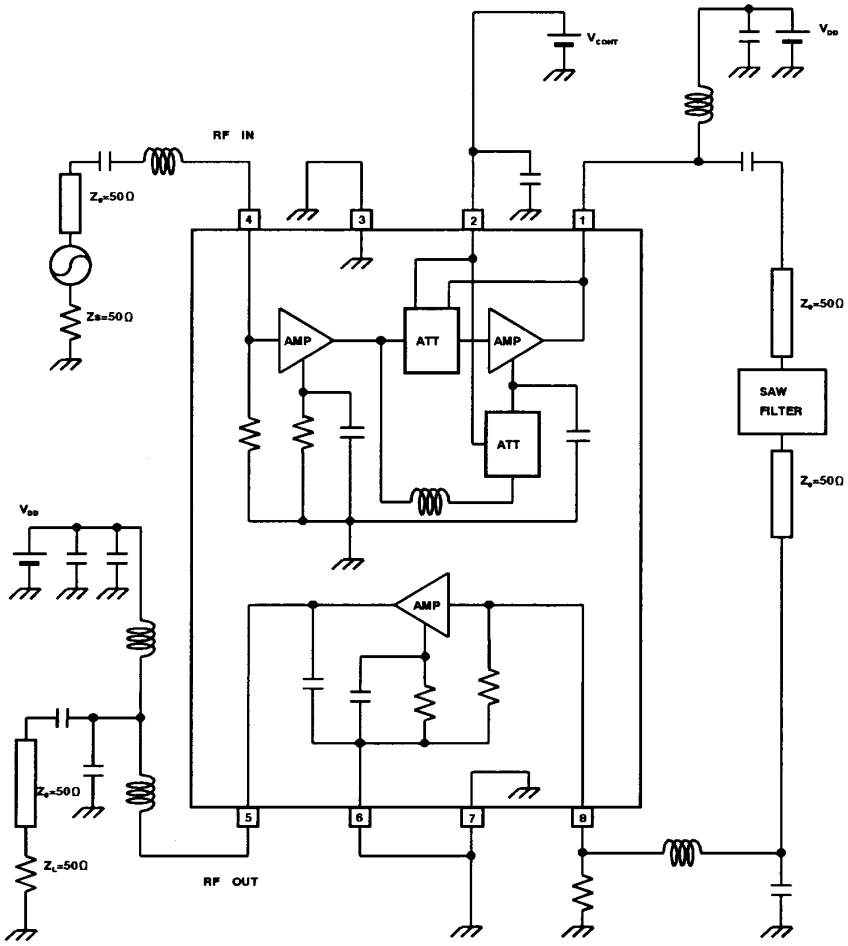

■APPLICATION CIRCUIT 1 (PDC800MHz)

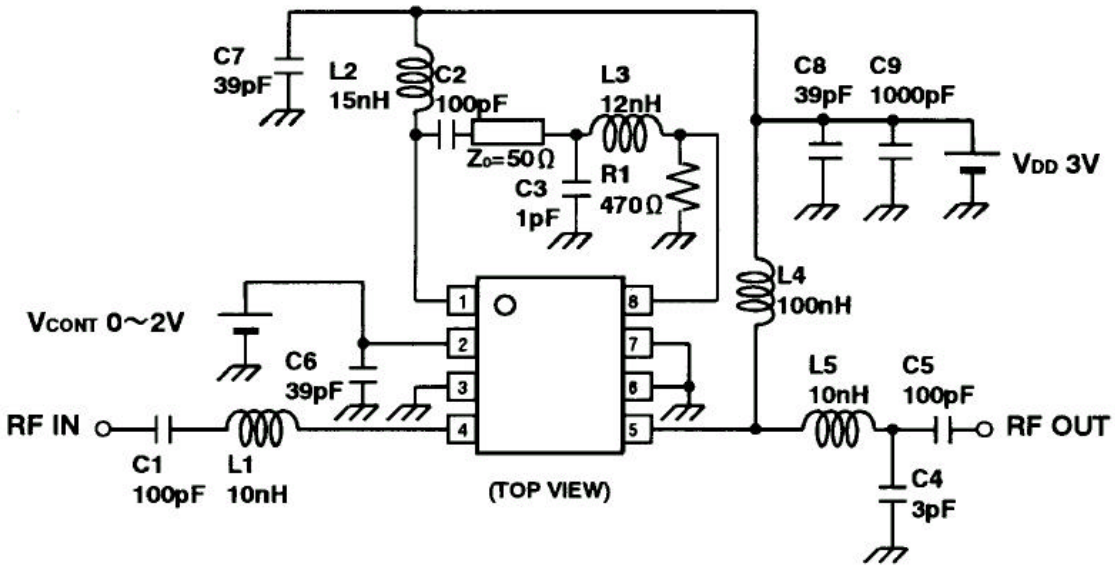

■**APPLICATION CIRCUIT 2** (PDC1.5GHz)

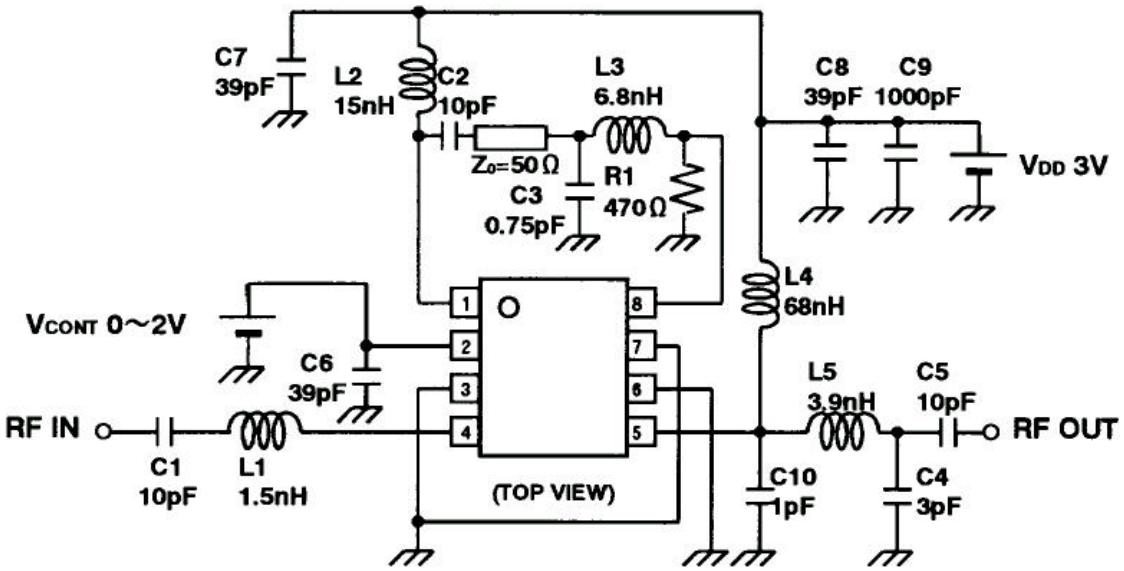

■**APPLICATION CIRCUIT 3** (PHS1.9GHz)

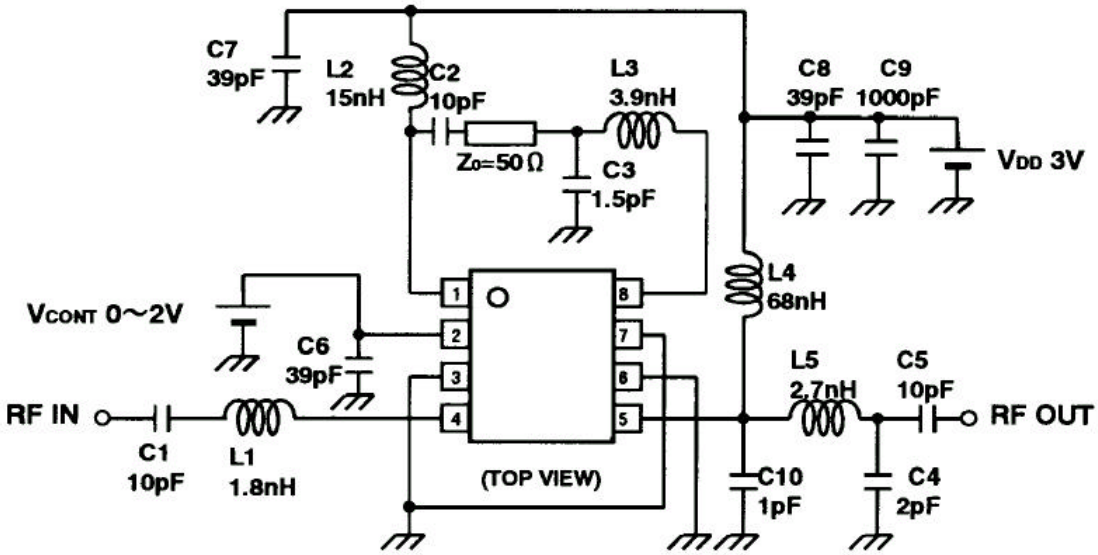

■RECOMMENDED PCB DESIGN

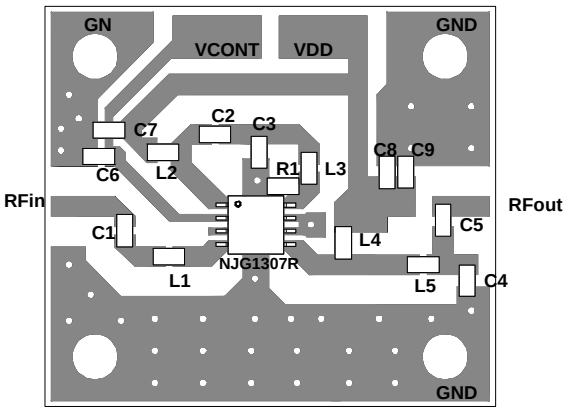

(PDC800MHz)

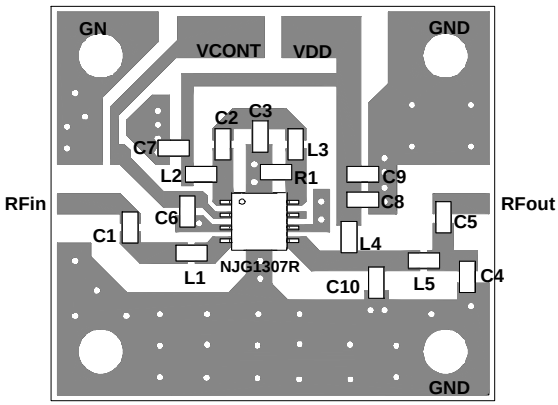

(PDC1.5GHz, PHS1.9GHz)

PCB:FR-4 22.5 x 20.0mm,t=0.5mm

MICROSTRIP LINE WIDTH=1.0mm (Zo=50Ω)

CHIP SIZE:1608

Notices

[1] Following chip capacitors should be connected near to each terminal as bypass capacitors.
(1) C6
(2) C7
(3) C8
(4) C9

[2] Following chip capacitors are necessary to block DC bias.
(1) C1
(2) C2
(3) C5

[3] In case of 1.5GHz,1.9GHz PCB evaluation board, please connect 3,7pin to the ground plane through holes as different from 6pin's through hole.

[4] Chip parts list.

Parts ID	Comment
C1~C10	MURATA GRM39 Series
L1~L5	TAIYO-YUDEN HK1608 Series

NJG1307R

■PACKAGE OUTLINE (VSP8)

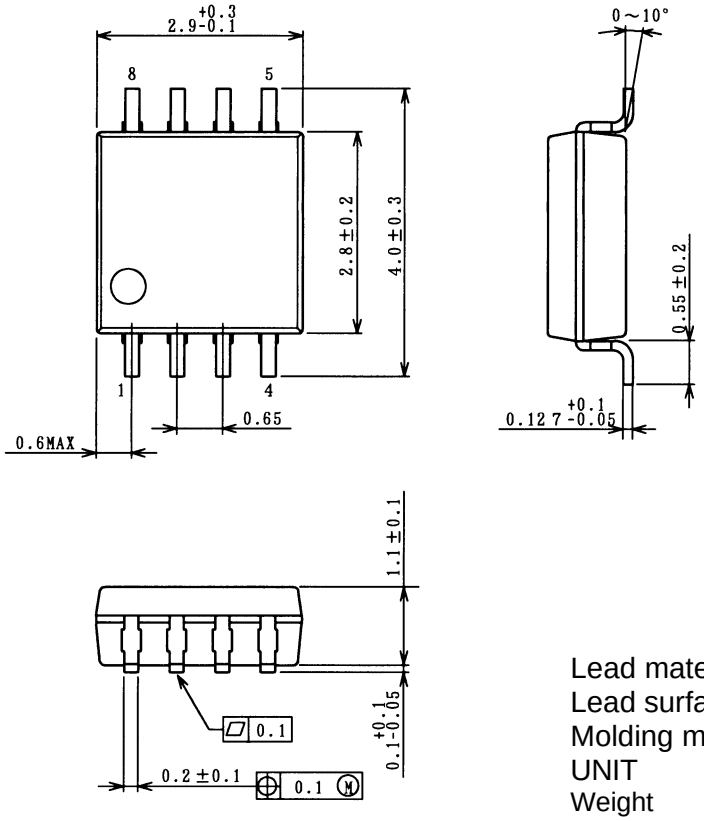

Lead material	: Copper
Lead surface finish	: Solder plating
Molding material	: Epoxy resin
UNIT	: mm
Weight	:22mg

Cautions on using this product

This product contains Gallium-Arsenide (GaAs) which is a harmful material.

- Do NOT eat or put into mouth.
- Do NOT dispose in fire or break up this product.
- Do NOT chemically make gas or powder with this product.
- To waste this product, please obey the relating law of your country.

This product may be damaged with electric static discharge (ESD) or spike voltage. Please handle

[CAUTION]
The specifications on this databook are only given for information , without any guarantee as regards either mistakes or omissions. The application circuits in this databook are described only to show representative usages of the product and not intended for the guarantee or permission of any right including the industrial rights.