DUAL LOW VOLTAGE POWER AMPLIFIER

■ GENERAL DESCRIPTION

The NJM2073 is a monolithic integrated circuit in 8 lead dual-in-line package, which is designed for dual audio power amplifier in portable radio and handy cassette player.

■ FEATURES

- Operating Voltage V^+=1.8～15V
- Low Crossover Distortion
- Low Operating Current
- Bridge or Stereo Configuration
- No Turn-on Noise
- Package Outline DIP8, DMP8, SIP9
- Bipolar Technology

■ PACKAGE OUTLINE

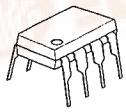

NJM 2073 D

NJM 2073 M

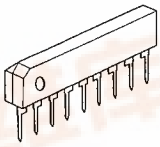

NJM 2073 S

■ PIN CONFIGURATION

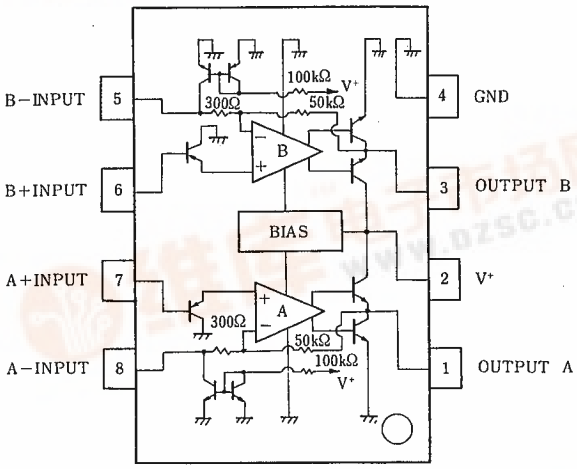

NJM2073D
NJM2073M

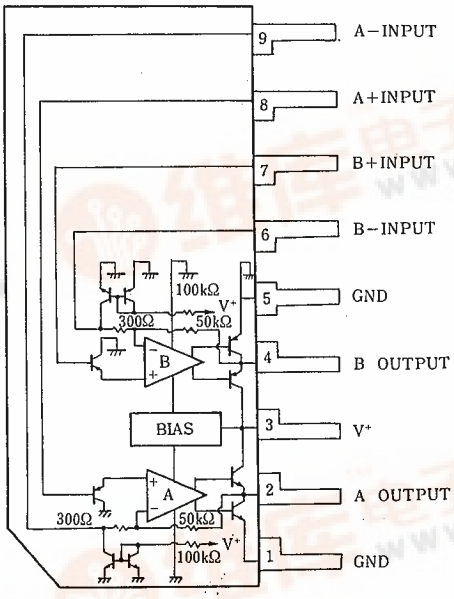

NJM2073S

■ ABSOLUTE MAXIMUM RATINGS

(Ta=25℃)

PARAMETER	SYMBOL	RATINGS	UNIT
Supply Voltage	V^+	15	V
Output Peak Current	I_{OP}	1	A
Power Dissipation	P_D	(DIP8) 700 (SIP9) 700 (DMP8) 300	mW
Input Voltage Range	V_{IN}	±0.4	V
Operating Temperature Range	T_{opr}	−40～+85	℃
Storage Temperature Range	T_{stg}	−40～+125	℃

■ ELECTRICAL CHARACTERISTICS

(1) BTL Configuration (Test Circuit Fig. 1)

(V^+=6V, Ta=25℃)

PARAMETER	SYMBOL	TEST CONDITION	MIN.	TYP.	MAX.	UNIT
Operating Voltage	V^+		1.8	—	15	V
Operating Current	I_{CC}	$R_L=\infty$	—	6	9	mA
Output Offset Voltage (Between the Outputs)	ΔV_O	$R_L=8\Omega$	—	10	50	mV
Input Bias Current	I_B		—	100	—	nA
Output Power		THD=10%, f=1kHz				
	P_O	V^+=9V, $R_L=16\Omega$ (Note)	—	2.0	—	W
	P_O	V^+=6V, $R_L=8\Omega$ (Note)	0.9	1.2	—	W
	P_O	V^+=4.5V, $R_L=8\Omega$	—	0.6	—	W
	P_O	V^+=4.5V, $R_L=4\Omega$ (Note)	—	0.8	—	W
	P_O	V^+=3V, $R_L=4\Omega$	200	300	—	mW
	P_O	V^+=2V, $R_L=4\Omega$	—	80	—	mW
		THD=1%, f=40kHz～15kHz				
	P_O	V^+=6V, $R_L=8\Omega$	—	1.0	—	W
	P_O	V^+=4.5V, $R_L=4\Omega$	—	0.6	—	W
Total Harmonic Distortion	THD	P_O=0.5W, $R_L=8\Omega$, f=1kHz	—	0.2	—	%
Close Loop Voltage Gain	A_V	f=1kHz	41	44	47	dB
Input Impedance	Z_{IN}	f=1kHz	100	—	—	kΩ
Equivalent Input Noise Voltage	$V_{NI}1$	$R_S=10k\Omega$, A Curve	—	2	—	μV
	$V_{NI}2$	$R_S=10k\Omega$, B=22Hz～22kHz	—	2.5	—	μV
Ripple Rejection	RR	f=100Hz	—	40	—	dB
Cutoff Frequency	f_H	A_V=−3dB from f=1kHz, $R_L=8\Omega$, P_O=1W	—	130	—	kHz

(Note) At on PC Board

(2) Stereo Configuration (Test Circuit Fig. 2)

PARAMETER	SYMBOL	TEST CONDITION	MIN.	TYP.	MAX.	UNIT
Operating Voltage	V^+		1.8	—	15	V
Output Voltage	V_O		—	2.7	—	V
Operating Current	I_{CC}	$R_L=\infty$	—	6	9	mA
Input Bias Current	I_B		—	100	—	nA
Output Power (Each Channel)		THD=10%, f=1kHz				
	P_O	V^+=6V, R_L=4Ω (Note)	0.5	0.65	—	W
	P_O	V^+=4.5V, R_L=4Ω	—	0.32	—	W
	P_O	V^+=3V, R_L=4Ω	—	120	—	mW
	P_O	V^+=2V, R_L=4Ω	—	30	—	mW
		THD=1%, f=1kHz				
	P_O	V^+=6V, R_L=4Ω	—	500	—	mW
	P_O	V^+=4.5V, R_L=4Ω	—	250	—	mW
Total Harmonic Distortion	THD	P_O=0.4W, R_L=4Ω, f=1kHz	—	0.25	—	%
Voltage Gain	A_V	f=1kHz	41	44	47	dB
Channel Balance	ΔA_V		—	—	±1	dB
Input Impedance	Z_{IN}	f=1kHz	100	—	—	kΩ
Equivalent Input Noise Voltage	V_{NI1}	R_S=10kΩ, A Curve	—	2.5	—	μV
	V_{NI2}	R_S=10kΩ, B=22Hz~22kHz	—	3	—	μV
Ripple Rejection	RR	f=100Hz, C_X=100μF	24	30	—	dB
Cutoff Frequency	f_H	A_V=−3dB from f=1kHz	—	200	—	kHz
		R_L=8Ω, P_O=250mW				

(Note) At on PC Board

■ ELECTRICAL CHARACTERISTICS M-Type

(1) BTL Configuration (Test Circuit Fig. 1) (V^+=6V, Ta=25℃)

PARAMETER	SYMBOL	TEST CONDITION	MIN.	TYP.	MAX.	UNIT
Operating Voltage	V^+		1.8	—	15	V
Operating Current	I_{CC}	$R_L=\infty$	—	6	9	mA
Output Offset Voltage (Between the Outputs)	ΔV_O	R_L=8Ω	—	10	50	mV
Input Bias Current	I_B		—	100	—	nA
Output Power		THD=10%, f=1kHz				
	P_O	V^+=6V, R_L=16Ω (Note)	—	0.8	—	W
	P_O	V^+=4V, R_L=8Ω (Note)	350	460	—	mW
	P_O	V^+=3V, R_L=4Ω (Note)	200	300	—	mW
	P_O	V^+=2V, R_L=4Ω	—	80	—	mW
		THD=1%, f=40Hz~15kHz				
	P_O	V^+=4V, R_L=8Ω	—	380	—	mW
Total Harmonic Distortion	THD	V^+=4V, R_L=8Ω, P_O=200mW, f=1kHz	—	0.2	—	%
Close Loop Voltage Gain	A_V	f=1kHz	41	44	47	dB
Input Impedance	Z_{IN}	f=1kHz	100	—	—	kΩ
Equivalent Input Noise Voltage	V_{NI1}	R_S=10kΩ, A Curve	—	2	—	μV
	V_{NI2}	R_S=10kΩ, B=22Hz~22kHz	—	2.5	—	μV
Ripple Rejection	RR	f=100Hz	—	40	—	dB
Cutoff Frequency	f_H	A_V=−3dB from f=1kHz,	—	130	—	kHz
		R_L=16Ω, P_O=0.5W				

(Note) At on PC Board

(2) Stereo Configuration (Test Circuit Fig. 2)

PARAMETER	SYMBOL	TEST CONDITION	MIN.	TYP.	MAX.	UNIT
Operating Voltage	V^+		1.8	—	15	V
Output Voltage	V_O		—	2.7	—	V
Operating Current	I_{CC}	$R_L=\infty$	—	6	9	mA
Input Bias Current	I_B		—	100	—	nA
Output Power (Each Channel)		THD=10%, f=1kHz				
	P_O	V^+=6V, R_L=16Ω	—	240	—	mW
	P_O	V^+=5V, R_L=8Ω (Note)	—	270	—	mW
	P_O	V^+=4V, R_L=4Ω (Note)	180	250	—	mW
	P_O	V^+=3V, R_L=4Ω	—	120	—	mW
	P_O	V^+=2V, R_L=4Ω	—	30	—	mW
		THD=1%, f=1kHz				
	P_O	V^+=4V, R_L=4Ω	—	180	—	mW
Total Harmonic Distortion	THD	V^+=4V, R_L=4Ω, P_O=150mW, f=1kHz	—	0.25	—	%
Voltage Gain	A_V	f=1kHz	41	44	47	dB
Channel Balance	ΔA_V		—	—	±1	dB
Input Impedance	Z_{IN}	f=1kHz	100	—	—	kΩ
Equivalent Input Noise Voltage	V_{NI1}	R_S=10kΩ, A Curve	—	2.5	—	μV
	V_{NI2}	R_S=10kΩ, B=22Hz~22kHz	—	3	—	μV
Ripple Rejection	RR	f=100Hz, Cx=100μF	24	30	—	dB
Cutoff Frequency	f_H	A_V=−3dB from f=1kHz R_L=16Ω, P_O=125mW	—	200	—	kHz

(Note) At on PC Board

5

■ TYPICAL APPLICATION & TEST CIRCUIT

Fig.1 BTL Configuration

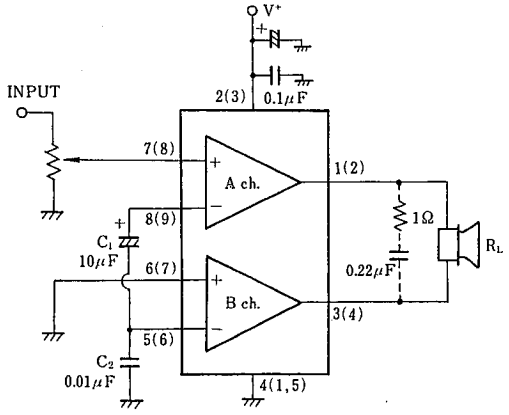

Fig.2 Stereo Configuration

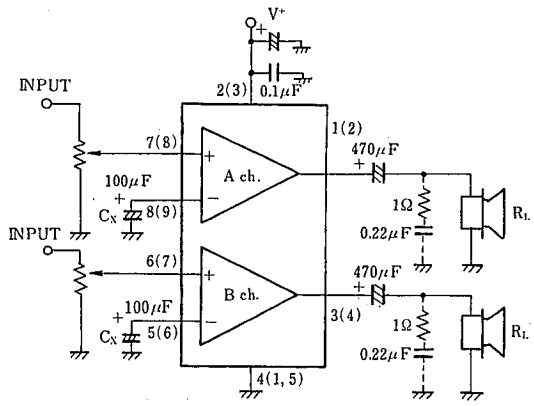

note: pin No. to D,M-Type
( )to S-Type

■ PARASITIC OSCILLATION PREVENTING CIRCUIT

Put 1Ω + 0.22μF on parallel to load, if the load is speaker. Recommend putting 0.1μF and more than 100μF capacitors with good high frequency characteristics in to near ground and supply voltage pins.

In BTL operation of less than 2V supply voltage, parasitic oscillation may be occurred with R = 1Ω. And so recommended R to be the same valve of pure resistance(r) when it is lower than 3V.

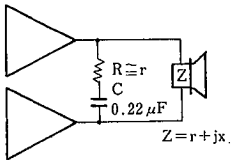

■ MUTING CIRCUIT

When Mute ON, OUTPUT level saturates to GND side.

Fig.3 BTL Configuration

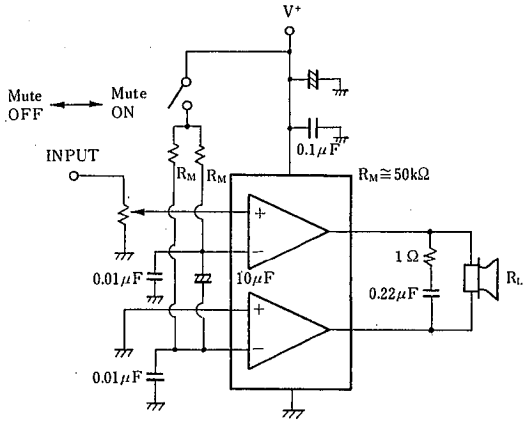

Fig.4 Stereo Configuration

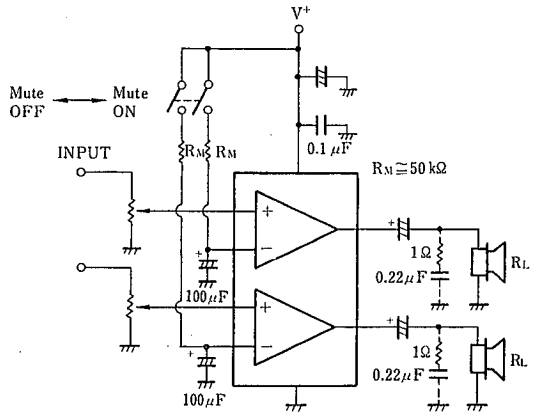

■ VOLTAGE GAIN REDUCTION APPLICATION EXAMPLE

(1) Outline of way to further Reduction

NJM2073 by taking in assumption, as one of OP-AMP (Gain 44dB, minus input impedance about 300Ω), to feedback from output to minus input helps to get reduction of stablized voltage Gain. Fig.5 indicates the model example.

Here is the point to be noticed that, in order to get the appropriate output Bias Voltage, it is important to keep the minus input floating as DC condition,(inserting Cx), and also that when extended too much reduction of Gain might cause Oscillation due to high band phase margin. The reduction of voltage gain is limitted at around 26 dB(20 times), and when oscillation, it in necessary to attach the oscillation atopper. Please examine the Cx value accordingly to the application reguirement.

Fig.5 Model of Voltage Gain Reduction

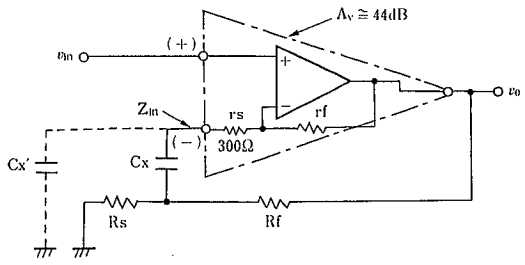

$$A_v = \frac{v_o}{v_{in}} \cong \frac{R_s + R_f}{R_s + \underset{(A_v)}{\frac{R_s+R_f}{160}} + \underset{(A_v)(Z_{in})}{\frac{R_s \times R_f}{160 \times 300}}} \quad (\text{倍})$$

(2) The Application Example of Voltage Gain Reduction.(STEREO)

Fig.6 indicates the application example and Table 1 indicates the recommendable value of parts to be attached externally.

Table 1, Applicating purpose and Recommended Value of Externally parts to be attached.

EXTERNAL PARTS	APPLICATION PURPOSE	RECOMMENDED VALUE	REMARKS
R_g	Plus input to be grounded by fixed DC	Under about 100kΩ	Catch the noise when much higher.
R_s	AV shall be decided with R_f	—	
R_f	AV shall be decided with R_s	About 5kΩ	The co-temperature of AV becomes higher in case when Rs is higher resistance. The current from output pin to GND becomes higher, in case when Rs is lower resistance. (The current sinks in vain.)
C_X	Minus input to be grounded by fixed DC	—	Low-band Cut off frequency (fL) is to be decided. The rise time becomes longer in case that C_X is big.
C_{CUP}	Output DC Decoupling	When $R_L = 8\Omega$, More than 220μF	fL shall be decided by C_{CUP} and Z_L.
C_{P1}	Stabilization of V+	More than about C_{cup}	Inserting near around V+ pin and GND pin.
C_{P2}	Prevention of Oscillation	More than 0.1μF	
r	〃	About R_L	〃
C	〃	0.22μF	To be examined by about the resisitor volume of the speaker load.

Fig.6 STEREO Application Example.

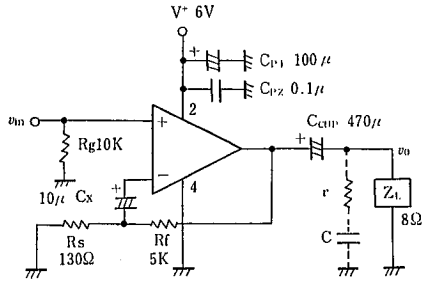

● Application for Voltage Gain Reduction (BTL)

Fig.7 indicates the application example, Table 2 shows recommended value of externally attaching parts.

Table 2 Applicating purpose and Recommended Value of External Part

EXTERNAL PARTS	APPLICATION PURPOSE	RECOMMENDED VALUE	REMARKS
R_g	DC condition ground of plus input	Below about 10kΩ	Making noise when higher.
R_s	AV shall be decided with R_f		
R_f	AV shall be decided with R_s	About 5kΩ	Temperature feature to be increased accordingly as in higher AV value. When lower, to be trended of Oscillation.
C_1	Releasing minus input in to DC condition		Setting up low band Cut-off frequency (fL). More higher, the rise time become longer.
C_2	Preventing Oscillation	About 0.02μF	The more higher in ralue, the high band THD, due to phase slippling to be deteriorated. When lower, to be trended of oscillation.
C_{P1}	Stability of V+ Preventing Oscillation	more than about 100μF	Inserting near around at V+ and the GND pin.
C_{P2}	Preventing Oscillation	mote than 0.1μF	〃
r	〃	About R_L	To be examined at around pure resister Value of speaker load.
C	〃	0.22μF	

Fig.7 BTL Application

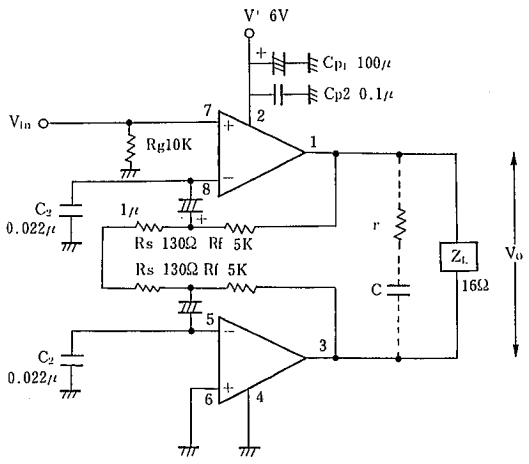

■ TYPICAL CHARACTERISTICS

Power Dissipation

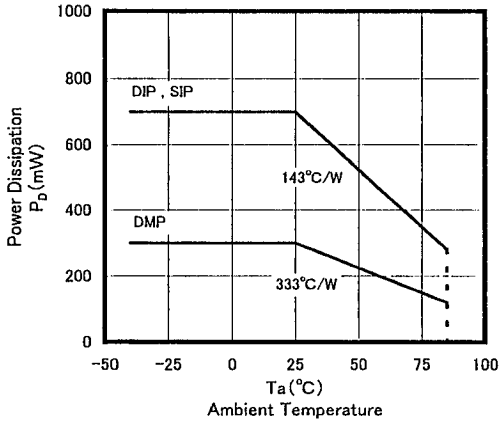

Operating Current

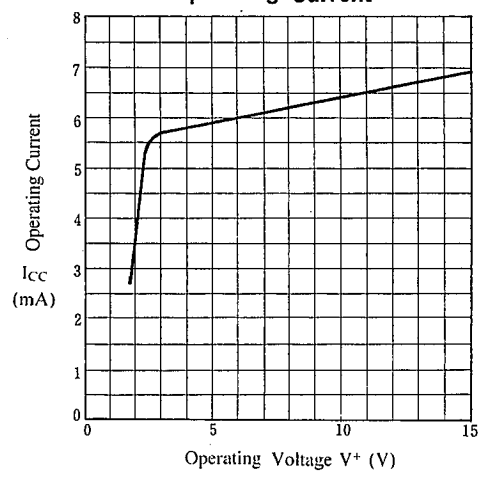

Ripple Rejection Ratio (BTL)

(Ta=25°C)

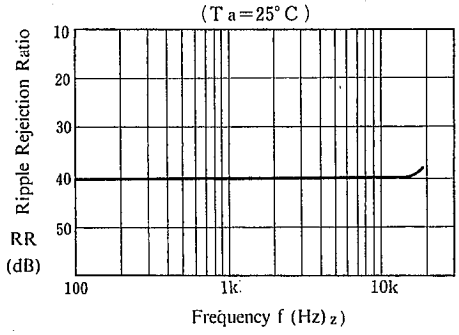

Ripple Rejection Ratio (Stereo)

(Ta=25°C)

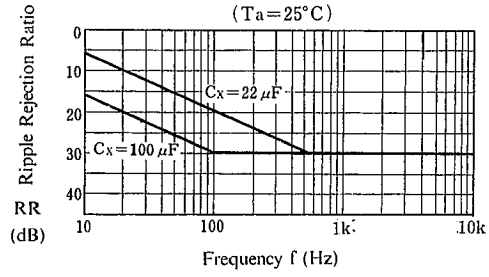

Maximum Output Voltage (BTL)

(Ta=25°C)

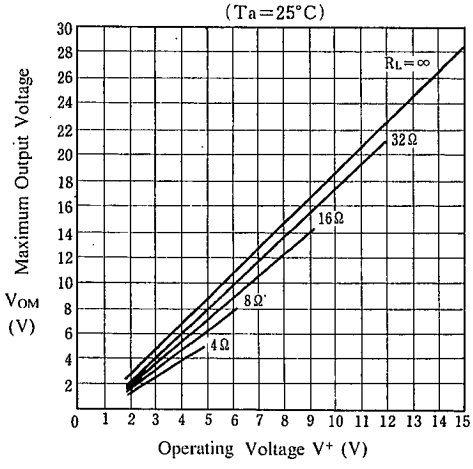

Maximum Output Voltage (Stereo)

(Ta=25°C)

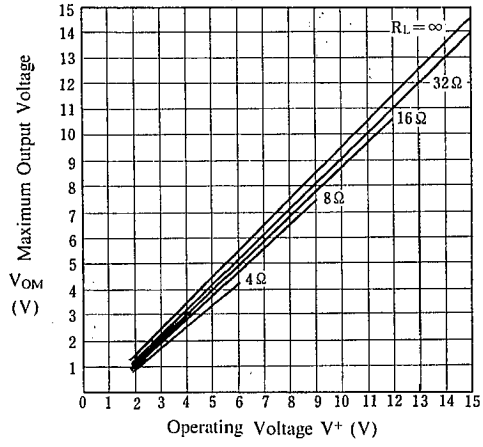

■ TYPICAL CHARACTERISTICS

Total Harmonic Distortion (BTL)
(V^+=6V, R_L=8Ω)

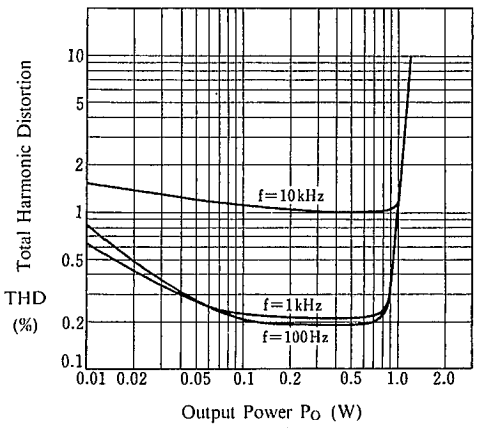

Total Harmonic Distortion (Stereo)
(V^+=6V, R_L=4Ω)

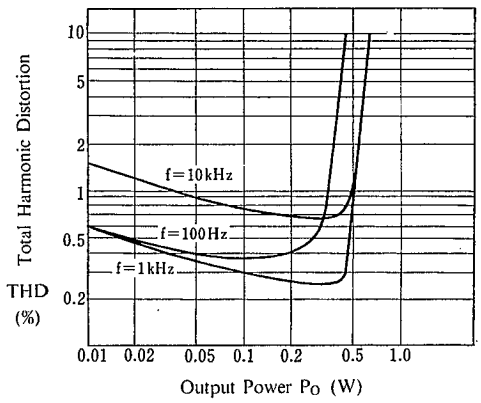

Power Dissipation vs. Output Power (BTL)
(R_L=4Ω, f=1kHz, Ta=25°C)

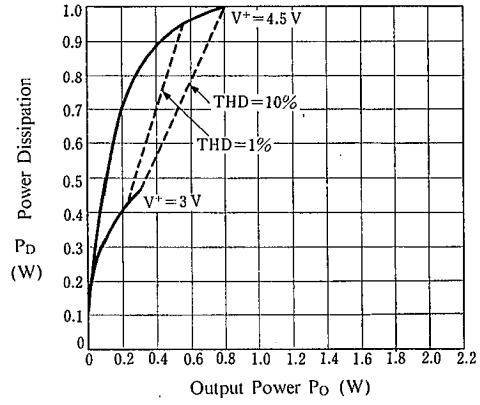

Power Dissipation vs. Output Power (BTL)
(R_L=8Ω, f=1kHz, Ta=25°C)

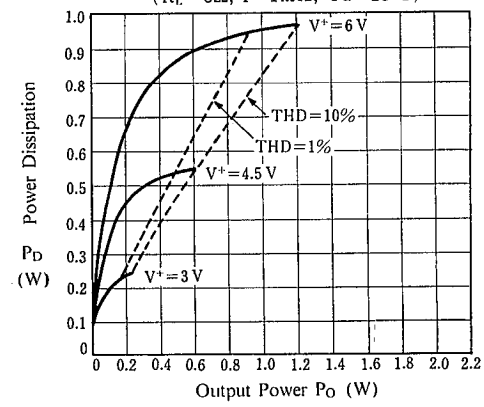

Power Dissipation vs. Output Power (BTL)
(R_L=16Ω, f=1kHz, Ta=25°C)

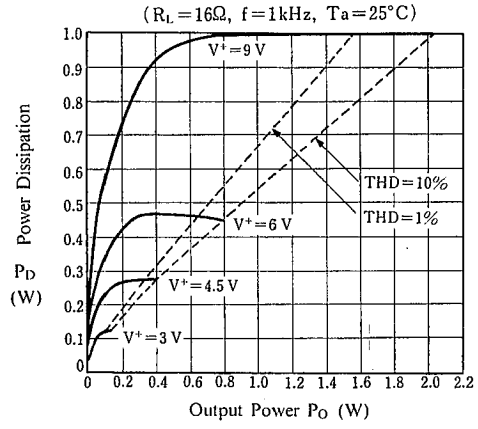

Power Dissipation vs. Output Power (BTL)
(R_L=32Ω, f=1kHz)

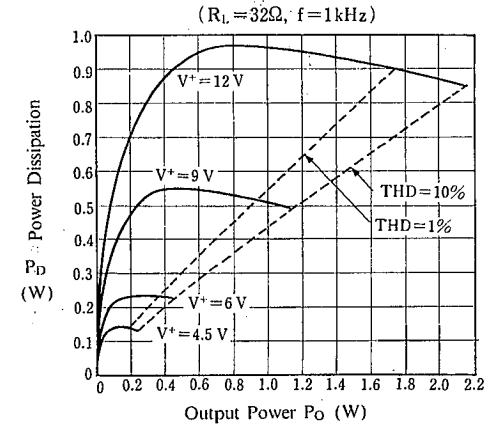

5

■ TYPICAL CHARACTERISTICS

Power Dissipation vs. Output Power (Stereo)

(R_L=4Ω, f=1kHz)

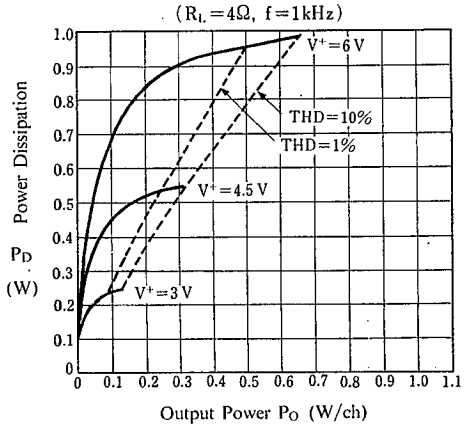

Power Dissipation vs. Output Power (Stereo)

(R_L=8Ω, f=1kHz)

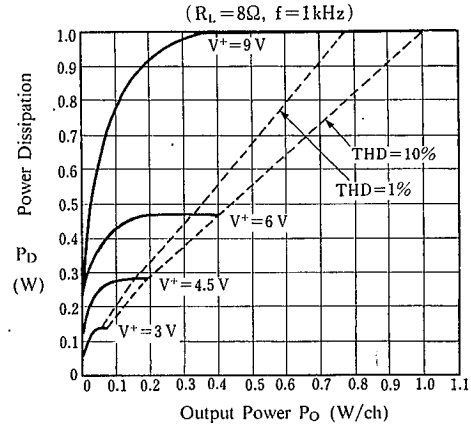

Power Dissipation vs. Output Power (Stereo)

(R_L=16Ω, f=1kHz)

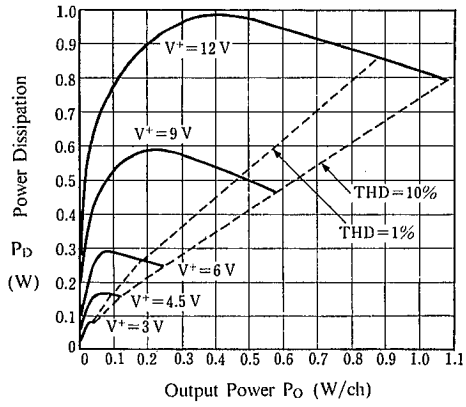

Power Dissipation vs. Output Power (Stereo)

(R_L=32Ω, f=1kHz)

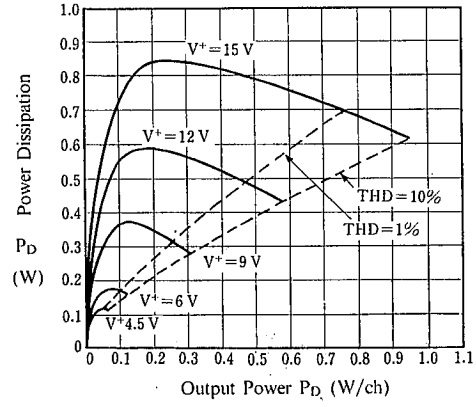

■ TYPICAL CHARACTERISTICS

Operating Current vs. Temperature

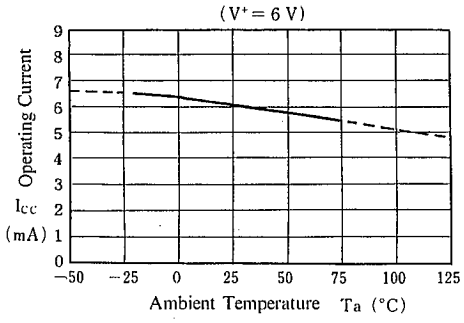

Voltage Gain vs. Temperature

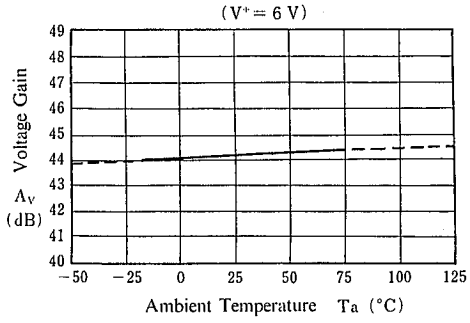

Channel Separation vs. Frequency

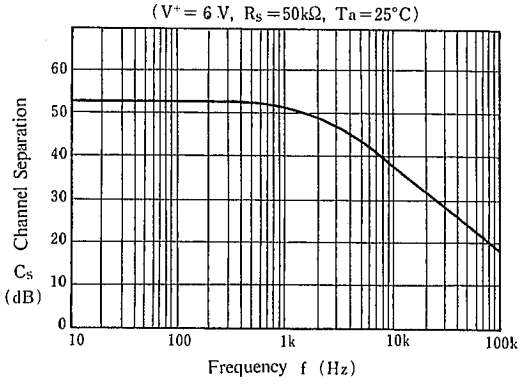

MEMO