查询OV7141供应商 捷多邦，专业PCB打样工厂，24小时加急出货

OmniVision™

Advanced Information
Preliminary Datasheet

OV7640 Color CMOS VGA (640 x 480) CAMERACHIP™
OV7141 B&W CMOS VGA (640 x 480) CAMERACHIP™

General Description

The OV7640 (color) and OV7141 (black and white) CAMERACHIPS™ are low voltage CMOS image sensors that provide the full functionality of a single-chip VGA (640 x 480) camera and image processor in a small footprint package. The OV7640/OV7141 provides full-frame, sub-sampled or windowed 8-bit images in a wide range of formats, controlled through OmniVision's Serial Camera Control Bus (SCCB) interface.

This product family has an image array capable of operating at up to 30 frames per second (fps) with complete user control over image quality, formatting and output data transfer. All required image processing functions, including exposure control, gamma, white balance, color saturation, hue control and more, are also programmable through the SCCB interface. In addition, OmniVision CAMERACHIPS use proprietary sensor technology to improve image quality by reducing or eliminating common lighting/electrical sources of image contamination such as fixed pattern noise, smearing, blooming, etc. to produce a clean, fully stable color image.

Features

- High sensitivity for low-light operation
- 2.5V operating voltage for embedded portable applications
- Standard Serial Camera Control Bus (SCCB) interface
- VGA, QVGA (sub-sampled) and Windowed outputs with Raw RGB, RGB (GRB 4:2:2), YUV (4:2:2) and YCbCr (4:2:2) formats
- Automatic image control functions including: Automatic Exposure Control (AEC), Automatic Gain Control (AGC), Automatic White Balance (AWB), Automatic Brightness Control (ABC), Automatic Band Filter (ABF) for 60Hz noise and Automatic Black-Level Calibration (ABLC)
- Image quality controls including color saturation, hue, gamma, sharpness (edge enhancement), anti-blooming and zero smearing

Ordering Information

Product	Package
OV7640 (Color)	PLCC-28
OV7141 (B&W)	PLCC-28

Applications

- Cellular and Picture Phones
- Toys
- PC Multimedia

Key Specifications

	Array Size	640 x 480 (VGA)
Power Supply	**Core**	2.5VDC ± 10%
	Analog	2.5VDC ± 4%
	I/O	2.25V to 3.3V
Power Requirements	**Active**	40 mW (30 fps, including I/O power)
	Standby	30 µW
Temperature Range	**Operation**	-10°C to 70°C
	Stable Image	0°C to 50°C
Output Formats (8-bit)		• YUV/YCbCr 4:2:2 • RGB 4:2:2 • Raw RGB Data
	Lens Size	1/4"
Maximum Image Transfer Rate	**VGA**	30 fps
	QVGA	60 fps
Sensitivity	**B&W**	3.0 V/Lux-sec
	Color	1.12 V/Lux-sec
	S/N Ratio	46 dB
	Dynamic Range	62 dB
	Scan Mode	Progressive/Interlaced
	Maximum Exposure Interval	523 x t_{ROW}
	Gamma Correction	0.45
	Pixel Size	5.6 µm x 5.6 µm
	Dark Current	30 mV/s
	Well Capacity	60 Ke
	Fixed Pattern Noise	< 0.03% of $V_{PEAK-TO-PEAK}$
	Image Area	3.6 mm x 2.7 mm
	Package Dimensions	11.43 mm x 11.43 mm

Figure 1 OV7640/OV7141 Pin Diagram

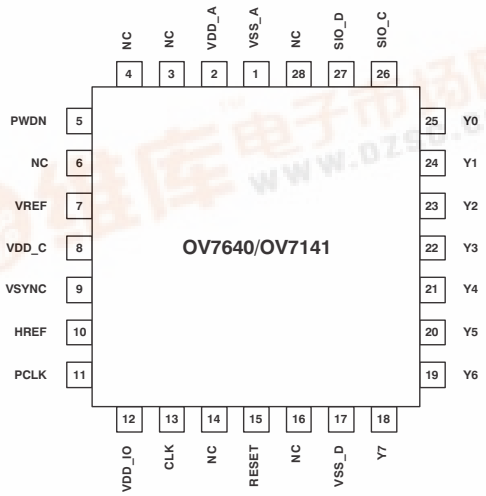

找PDF 维库一下 pdf.dzsc.com

Functional Description

Figure 2 shows the functional block diagram of the OV7640/OV7141 image sensor. The OV7640/OV7141 includes:

- Image Sensor Array (640 x 480 resolution)
- Timing Generator
- Analog Processing Block
- A/D Converters
- Output Formatter
- Digital Video Port
- SCCB Interface

Figure 2 OV7640/OV7141 Functional Block Diagram

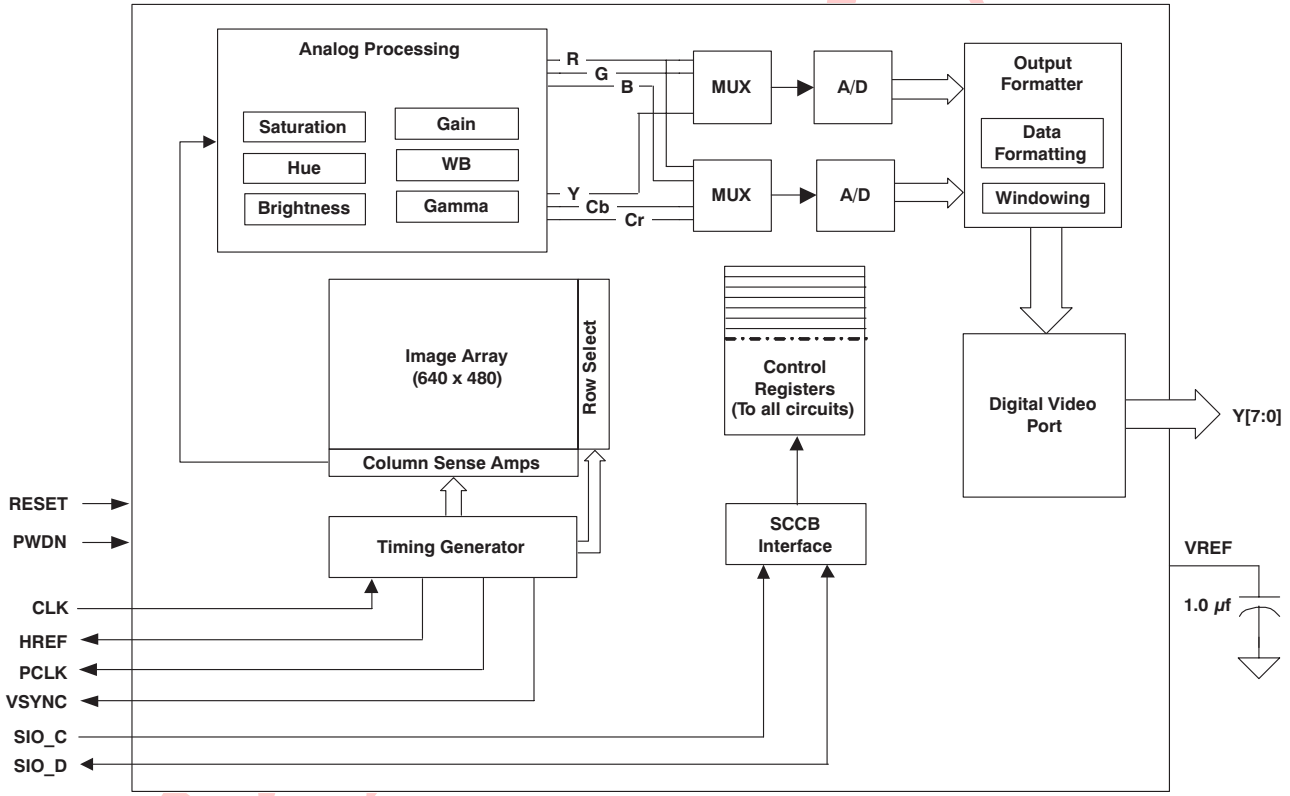

Image Sensor Array

The OV7640/OV7141 CAMERACHIPS has an active image array size of 640 columns x 480 rows (307,200 pixels). However, the full array contains 652 columns and 486 rows, with the extra 6 rows used for black-level calibration ("Optical Black") and color interpolation information. Figure 3 shows a cross-section of the image sensor array.

Figure 3 Image Sensor Array

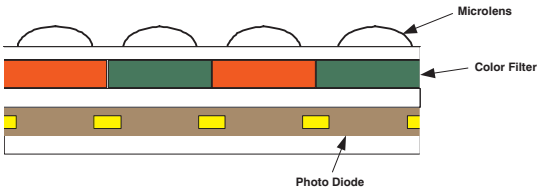

Timing Generator

In general, the timing generator controls these functions:

- Array control and frame generation (VGA and QVGA outputs)
- Internal timing signal generation and distribution
- Frame rate timing
- Automatic Exposure Control (AEC)
- External timing outputs (VSYNC, HREF and PCLK)

Analog Processing Block

This block performs all analog image functions including:

- Automatic Gain Control (AGC)
- Automatic White Balance (AWB)
- Image quality controls including:
  - Color saturation
  - Hue
  - Gamma
  - Sharpness (edge enhancement)
  - Anti-blooming
  - Zero smearing

A/D Converters

After the Analog Processing Block, the color channel data signal is fed to two 8-bit Analog-to-Digital (A/D) converters via the multiplexers, one for the Y/G channel and one shared by the CrCb/BR channels. These A/D converters operate at speeds up to 12MHz, and are fully synchronous to the pixel rate (actual conversion rate is related to the frame rate).

In addition to the A/D conversion, this block also has the following functions:

- Digital Black-Level Calibration (BLC)
- Optional U/V channel delay
- Additional A/D range controls

In general, the combination of the A/D Range Multiplier and A/D Range Control sets the A/D range and maximum value to allow the user to adjust the final image brightness as a function of the individual application.

Output Formatter

This block controls all output and data formatting required prior to sending the image out.

Digital Video Port

These two bits increase I_{OL} / I_{OH} drive current and can be adjusted as a function of the customer's loading:

SCCB Interface

The Serial Camera Control Bus (SCCB) interface controls the CAMERACHIP operation. Refer to *OmniVision Technologies Serial Camera Control Bus (SCCB) Specification* for detailed usage of the serial control port.

Preliminary

Pin Description

Table 1 Pin Description

Pin Number	Name	Pin Type	Function/Description
01	VSS_A	Ground	Analog ground
02	VDD_A	V_{DD}	Analog VDD
03	NC	—	No connection
04	NC	—	No connection
05	PWDN	Input	Sets device to power down standby mode
06	NC	—	No connection
07	VREF	V_{REF}	Internal voltage reference (2.3V). Connect to ground through 1µF capacitor
08	VDD_C	V_{DD}	Core VDD
09	VSYNC	Output	Vertical sync output
10	HREF	Output	HREF output
11	PCLK	Output	Pixel clock output
12	VDD_IO	V_{DD}	I/O VDD
13	CLK	Input	External clock
14	NC	—	No connection
15	RESET	Input	Clears all registers and resets them to their default values.
16	NC	—	No connection
17	VSS_D	Ground	Digital ground
18	Y7	Output	Digital video output bit[7]
19	Y6	Output	Digital video output bit[6]
20	Y5	Output	Digital video output bit[5]
21	Y4	Output	Digital video output bit[4]
22	Y3	Output	Digital video output bit[3]
23	Y2	Output	Digital video output bit[2]
24	Y1	Output	Digital video output bit[1]
25	Y0	Output	Digital video output bit[0]
26	SIO_C	Input	SCCB serial interface clock
27	SIO_D	I/O	SCCB serial interface data I/O
28	NC	—	No connection

Preliminary

Electrical Characteristics

Table 2 Absolute Maximum Ratings

Ambient Storage Temperature		-40ºC to +125ºC
Supply Voltages (with respect to Ground)	V_{DD-A}	3V
	V_{DD-C}	3V
	V_{DD-IO}	4V
All Input/Output Voltages (with respect to Ground)		-0.3V to VDD_IO+1V
Lead Temperature, Surface-mount process		+230ºC
ESD Rating, Human Body model		2000V

NOTE: Exceeding the Absolute Maximum ratings shown above invalidates all AC and DC electrical specifications and may result in permanent device damage.

Table 3 DC Characteristics (0°C < T_A < 70°C)

Symbol	Parameter	Condition	Min	Typ	Max	Unit
V_{DD-A}	DC supply voltage – Analog	—	2.40	2.5	2.60	V
V_{DD-C}	DC supply voltage – Core	—	2.25	2.5	2.75	V
V_{DD-IO}	DC supply voltage – I/O	—	2.25	—	3.3	V
I_{DDA}	Active (Operating) Current	See Note [a]		15		mA
$I_{DDS-SCCB}$	Standby Current	See Note [b]		1		mA
$I_{DDS-PWDN}$	Standby Current			10		µA
V_{IH}	Input voltage HIGH	CMOS	0.7 x V_{DD-IO}			V
V_{IL}	Input voltage LOW				0.3 x V_{DD-IO}	V
V_{OH}	Output voltage HIGH	CMOS (I_{OH} / I_{OL})	0.9 x V_{DD-IO}			V
V_{OL}	Output voltage LOW				0.1 x V_{DD-IO}	V
I_{OH}	Output current HIGH	See Note [c]	8			mA
I_{OL}	Output current LOW		15			mA
I_L	Input/Output Leakage	GND to V_{DD-IO}			± 1	µA

a. V_{DD-A} = V_{DD-C} = 2.5V, V_{DD-IO} = 3.0V
$I_{DDA} = \Sigma\{I_{DD-IO} + I_{DD-C} + I_{DD-A}\}$, f_{CLK} = 24MHz at 30 fps, no I/O loading

b. V_{DD-A} = V_{DD-C} = 2.5V, V_{DD-IO} = 3.0V
$I_{DDS:SCCB}$ refers to a SCCB-initiated Standby, while $I_{DDS:PWDN}$ refers to a PWDN pin-initiated Standby

c. Standard Output Loading = 25pF, 1.2KΩ to 3V

Preliminary

Table 4 Functional and AC Characteristics (0°C < T_A < 70°C)

Symbol	Parameter	Min	Typ	Max	Unit
Functional Characteristics					
	A/D Differential Non-Linearity		± 1/2		LSB
	A/D Integral Non-Linearity		± 1		LSB
	AGC Range			21	dB
	Red/Blue Adjustment Range			12	dB
Inputs (PWDN, CLK, RESET)					
f_{CLK}	Input Clock Frequency	10	24	27	MHz
t_{CLK}	Input Clock Period	100	42	37	ns
$t_{CLK:DC}$	Clock Duty Cycle	45	50	55	%
$t_{S:RESET}$	Setting time after software/hardware reset			1	ms
$t_{S:REG}$	Settling time for register change (10 frames required)			300	ms
SCCB (SIO_C and SIO_D - see Figure 4)					
f_{SIO_C}	Clock Frequency			400	KHz
t_{LOW}	Clock Low Period	1.3			µs
t_{HIGH}	Clock High Period	600			ns
t_{AA}	SIO_C low to Data Out valid	100		900	ns
t_{BUF}	Bus free time before new START	1.3			µs
$t_{HD:STA}$	START condition Hold time	600			ns
$t_{SU:STA}$	START condition Setup time	600			ns
$t_{HD:DAT}$	Data-in Hold time	0			µs
$t_{SU:DAT}$	Data-in Setup time	100			ns
$t_{SU:STO}$	STOP condition Setup time	600			ns
t_R, t_F	SCCB Rise/Fall times			300	ns
t_{DH}	Data-out Hold time	50			ns
Outputs (VSYNC, HREF, PCLK, and Y[7:0] - see Figure 5, Figure 6, and Figure 7)					
t_{PDV}	PCLK[↓] to Data-out Valid			5	ns
t_{SU}	Y[7:0] Setup time	15			ns
t_{HD}	Y[7:0] Hold time	8			ns
t_{PHH}	PCLK[↓] to HREF[↑]	0		5	ns
t_{PHL}	PCLK[↓] to HREF[↓]	0		5	ns
AC Conditions:	• V_{DD}: V_{DD-A} = V_{DD-C} = 2.5V, V_{DD-IO} = 3.3V • Rise/Fall Times: I/O: 5ns, Maximum SCCB: 300ns, Maximum • Input Capacitance: 10pf • Output Loading: 25pF, 1.2KΩ to 3V • f_{CLK}: 24MHz				

Preliminary

Timing Specifications

Figure 4 SCCB Timing Diagram

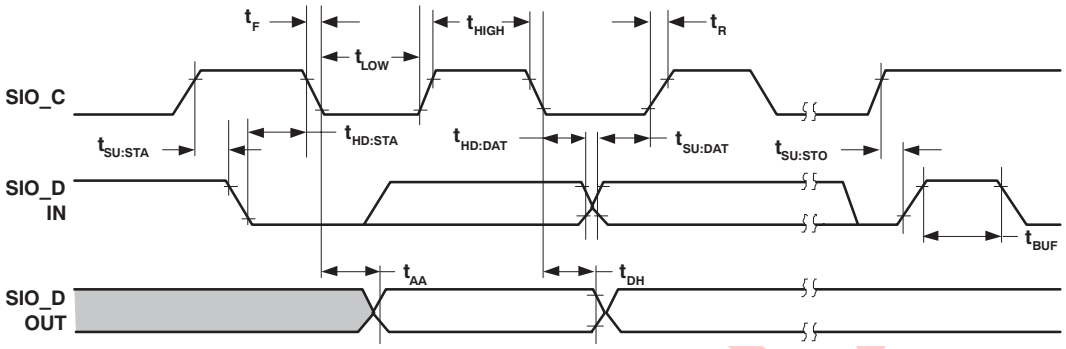

Figure 5 Row Output Timing Diagram

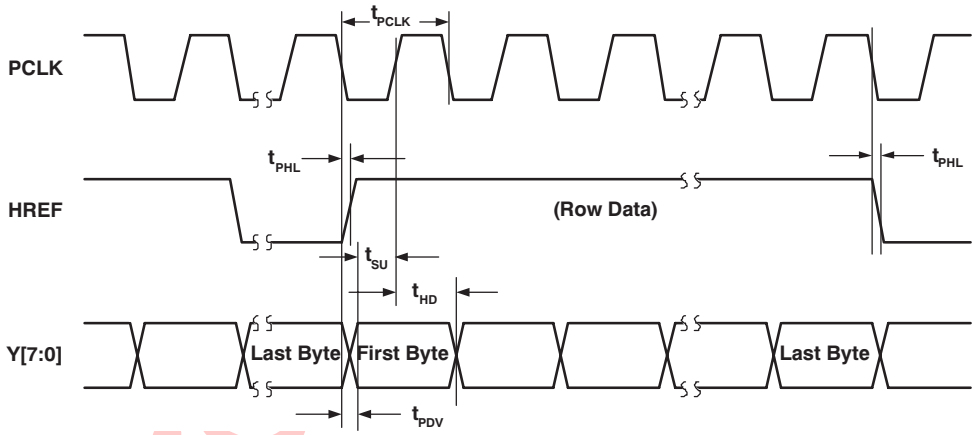

Preliminary

Figure 6 VGA Frame Timing Diagram

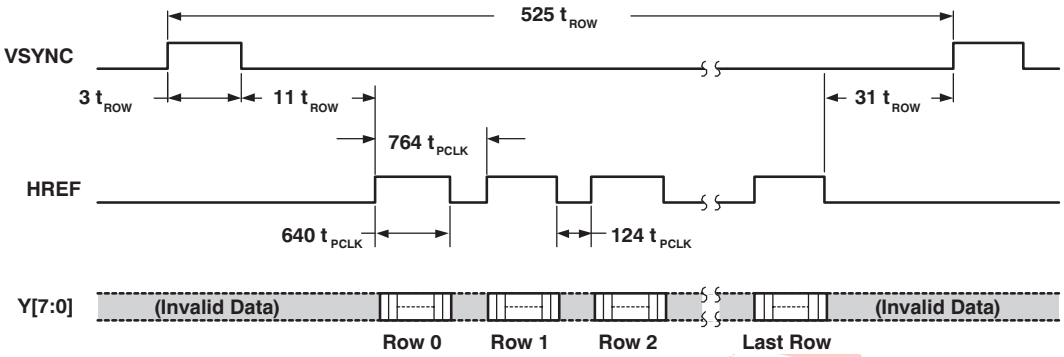

Figure 7 QVGA Frame Timing Diagram

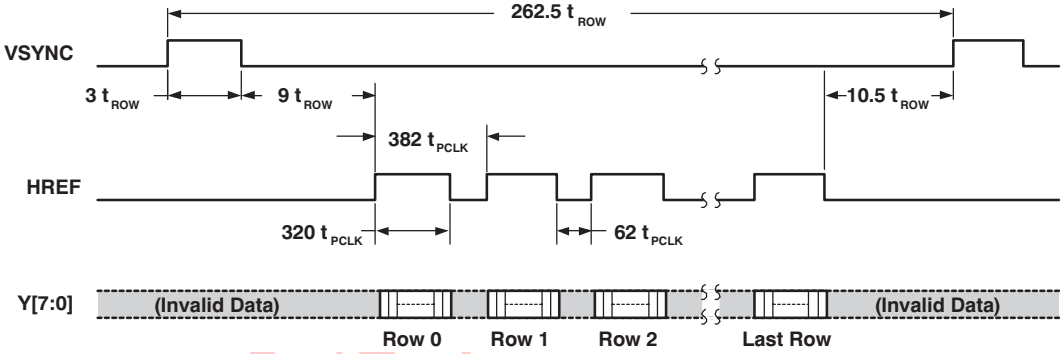

Note: As the RGB, YUV and YCbCr formats use the Bayer pattern for interpolation, the first row transferred out on the Y[7:0] bus will be invalid, as there is no row above Row #1 to provide the 'pair data' required. Because of this, the OV7640 does not enable the HREF signal during the first row read (shown above in the 'invalid data' zone).

Preliminary

Figure 8 RGB 565 Output Timing Diagram

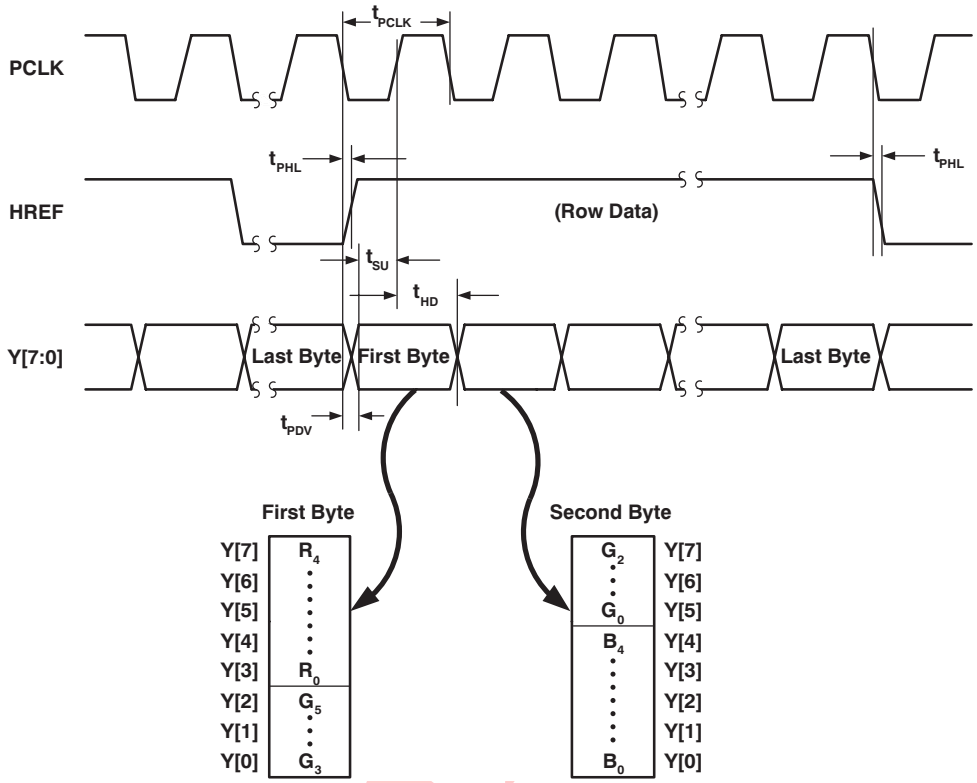

Figure 9 RGB 555 Output Timing Diagram

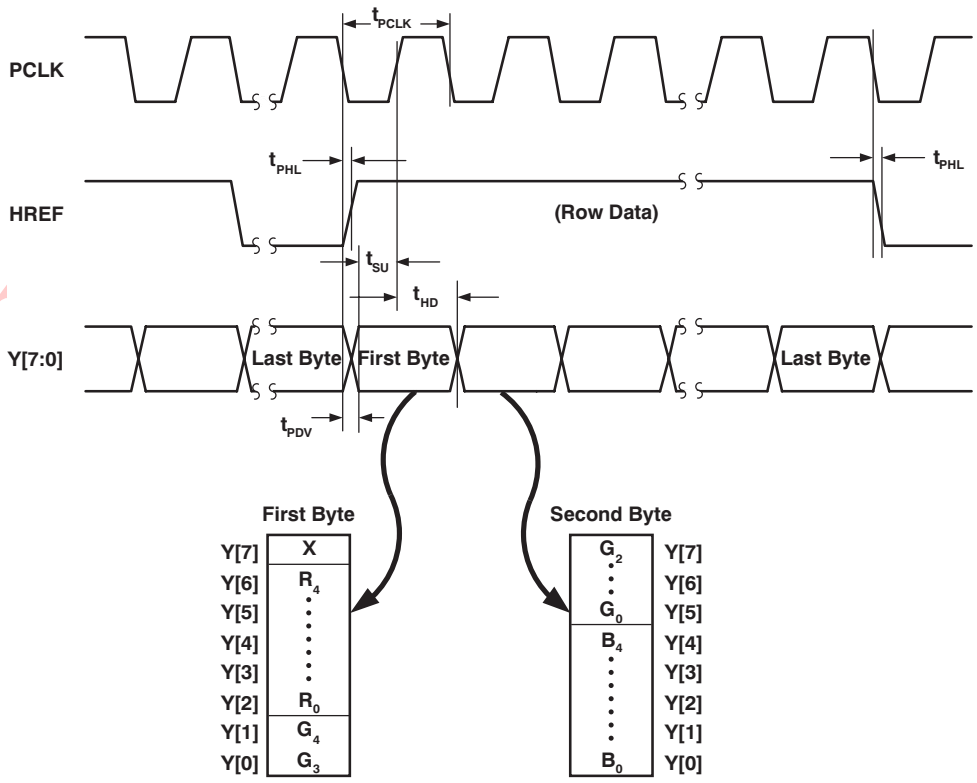

Register Set

Table 5 provides a list and description of the Device Control registers contained in the OV7640/OV7141. For all register Enable/Disable bits, ENABLE=1 and DISABLE=0. The device slave addresses for the OV7640/OV7141 are 42 for write and 43 for read.

Table 5 SCCB Register List

Address (Hex)	Register Name	Default (Hex)	R/W	Description
00	GAIN	00	RW	AGC – Gain control gain setting • Range: [00] to [FF]
01	BLUE	80	RW	AWB – Blue channel gain setting • Range: [00] to [FF] ***Note:*** *This function is not available on the B&W OV7141.*
02	RED	80	RW	AWB – Red channel gain setting • Range: [00] to [FF] ***Note:*** *This function is not available on the B&W OV7141.*
03	SAT	84	RW	Image Format – Color saturation value Bit[7:4]: Saturation value • Range: [0] to [F] Bit[3:0]: Reserved ***Note:*** *This function is not available on the B&W OV7141.*
04	HUE	34	RW	Image Format – Color hue control Bit[7:6]: Reserved Bit[5]: Hue Enable Bit[4:0]: Hue setting ***Note:*** *This function is not available on the B&W OV7141.*
05	CWF	3E	RW	AWB – Red/Blue Pre-Amplifier gain setting Bit[7:4]: Red channel pre-amplifier gain setting • Range: [0] to [F] Bit[3:0]: Blue channel pre-amplifier gain setting • Range: [0] to [F] ***Note:*** *This function is not available on the B&W OV7141.*
06	BRT	80	RW	ABC – Brightness setting • Range: [00] to [FF]
07-09	RSVD	XX	–	Reserved
0A	PID	76	R	Product ID number (Read only)
0B	VER	48	R	Product version number (Read only)
0C-0F	RSVD	XX	–	Reserved
10	AECH	41	RW	Exposure Value

Preliminary

Table 5 SCCB Register List

Address (Hex)	Register Name	Default (Hex)	R/W	Description
11	CLKRC	00	RW	Data Format and Internal Clock Bit[7:6]: Data Format – HSYNC/VSYNC Polarity_ 00: HSYNC = NEG VSYNC = POS 01: HSYNC = NEG VSYNC = NEG 10: HSYNC = POS VSYNC = POS 11: HSYNC = POS VSYNC = POS 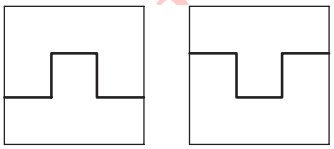 POS NEG Bit[5:0]: Internal Clock Pre-Scalar • Range: [0 0000] to [F FFFF]
12	COMA	14	RW	Common Control A Bit[7]: SCCB – Register Reset 0: No change 1: Reset all registers to default values Bit[6]: Output Format – Mirror Image Enable Bit[5]: Reserved Bit[4]: Data Format – YUV formatting 0: Y U Y V Y U Y V 1: U Y V Y U Y V Y (default) Bit[3]: Output Format – Output Channel Select A 0: YUV/YCbCr 1: RGB/Raw RGB Bit[2]: AWB – Enable Bit[1:0]: Reserved ***Note:*** *This function is not available on the B&W OV7141.*
13	COMB	A3	RW	Common Control B Bit[7:5]: Reserved Bit[4]: Data Format – ITU-656 Format Enable Bit[3]: Reserved Bit[2]: SCCB – Tri-State Enable – Y[7:0] Bit[1]: AGC – Enable Bit[0]: AEC – Enable

Preliminary

Table 5 SCCB Register List

Address (Hex)	Register Name	Default (Hex)	R/W	Description
14	COMC	04	RW	Common Control C Bit[7:6]: Reserved Bit[5]: Output Format – Resolution 0: VGA (640x480) 1: QVGA (320x240) Bit[4]: Reserved Bit[3]: Data Format – HREF Polarity 0: HREF Positive 1: HREF Negative 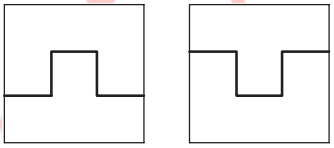 POS NEG Bit[2:0]: Reserved
15	COMD	00	RW	Common Control D Bit[7]: Data Format – Output Flag Bit Disable 0: Frame = 254 data bits (00/FF = Reserved flag bits) 1: Frame = 256 data bits Bit[6]: Data Format – Y[7:0]-PCLK Reference Edge 0: Y[7:0] data out on PCLK falling edge 1: Y[7:0] data out on PCLK rising edge Bit[5:1]: Reserved Bit[0]: Data Format – UV Sequence Exchange 0: V Y U Y V Y U Y 1: U Y V Y U Y V Y ***Note:*** *Bit[0] is not programmable on the B&W OV7141.*
16	RSVD	XX	–	Reserved
17	HSTART	1A	RW	Output Format – Horizontal Frame (HREF Column) Start
18	HSTOP	BA	RW	Output Format – Horizontal Frame (HREF Column) Stop
19	VSTRT	03	RW	Output Format – Vertical Frame (Row) Start
1A	VSTOP	F3	RW	Output Format – Vertical Frame (Row) Stop
1B	PSHFT	00	RW	Data Format – Pixel Delay Select (Delays timing of the Y[7:0] data relative to HREF in pixel units) • Range: [00] (No delay) to [FF] (256 pixel delay)
1C	MIDH	7F	R	Manufacturer ID Byte – High (Read only = 0x7F)
1D	MIDL	A2	R	Manufacturer ID Byte – Low (Read only = 0xA2)
1E	RSVD	XX	–	Reserved

Preliminary

Table 5 SCCB Register List

Address (Hex)	Register Name	Default (Hex)	R/W	Description
1F	FACT	01	RW	Output Format – Format Control Bit[7:5]: Reserved Bit[4]: Output Format – RGB:565 Enable ***Note:*** *Bit[4] is not programmable on the B&W OV7141.* Bit[3]: Reserved Bit[2]: Output Format – RGB:555 Enable ***Note:*** *Bit[2] is not programmable on the B&W OV7141.* Bit[1:0]: Reserved
20	COME	C0	RW	Common Control E Bit[7]: Reserved Bit[6]: AEC – Digital Averaging Enable Bit[5]: Reserved Bit[4]: Image Quality – Edge Enhancement Enable Bit[3:1]: Reserved Bit[0]: Y[7:0] 2X I_{OL} / I_{OH} Enable
21-23	RSVD	XX	–	Reserved
24	AEW	10	RW	AGC/AEC – Stable Operating Region – Upper Limit
25	AEB	8A	RW	AGC/AEC – Stable Operating Region – Lower Limit
26	COMF	A2	RW	Common Control F Bit[7:3]: Reserved Bit[2]: Data Format – Output Data MSB/LSB Swap Enable (LSB → MSB (Y[7]) and MSB → LSB (Y[0]) Bit[1:0]: Reserved
27	COMG	E2	RW	Common Control G Bit[7:5]: Reserved Bit[4]: Color Matrix – RGB Crosstalk Compensation Enable (Used to increase each color filter's efficiency) ***Note:*** *Bit[4] is not programmable on the B&W OV7141.* Bit[3:2]: Reserved Bit[1]: Data Format – Output Full Range Enable 0: Output Range = [10] to [F0] (224 bits) 1: Output Range = [01] to [FE] (254/256 bits) Bit[0]: Reserved
28	COMH	20	RW	Common Control H Bit[7]: Output Format – RGB Output Select 0: RGB 1: Raw RGB Bit[6]: Device Select 0: OV7640 1: OV7141 Bit[5]: Output Format – Scan Select 0: Interlaced 1: Progressive Bit[4:0]: Reserved

Preliminary

Table 5 SCCB Register List

Address (Hex)	Register Name	Default (Hex)	R/W	Description
29	COMI	00	R	Common Control I Bit[7:2]: Reserved Bit[1:0]: Device Version (Read-only)
2A	FRARH	00	RW	Output Format – Frame Rate Adjust High Bit[7]: Data Format – Frame Rate Adjust Enable Bit[6:5]: Data Format – Frame Rate Adjust Setting MSB FRA[9:0] = MSB + LSB = FRARH[6:5] + FRARL[7:0] Bit[4]: A/D – UV Channel '2 Pixel Delay' Enable ***Note:*** *Bit[4] is not programmable on the B&W OV7141.* Bit[3:0]: Reserved
2B	FRARL	00	RW	Data Format – Frame Rate Adjust Setting LSB FRA[9:0] = MSB + LSB = FRARH[6:5] + FRARL[7:0]
2C	RSVD	XX	–	Reserved
2D	COMJ	81	RW	Common Control J Bit[7:3]: Reserved Bit[2]: AEC – Band Filter Enable Bit[1:0]: Reserved
2E-5F	RSVD	XX	–	Reserved
60	SPCB	06	RW	Signal Process Control B Bit[7]: AGC – 1.5x Multiplier (Pre-amplifier) Enable Bit[6:0]: Reserved
61-6B	RSVD	XX	–	Reserved
6C	RMCO	11	RW	Color Matrix – RGB Crosstalk Compensation – R Channel ***Note:*** *This function is not available on the B&W OV7141.*
6D	GMCO	01	RW	Color Matrix – RGB Crosstalk Compensation – G Channel ***Note:*** *This function is not available on the B&W OV7141.*
6E	BMCO	06	RW	Color Matrix – RGB Crosstalk Compensation– B Channel ***Note:*** *This function is not available on the B&W OV7141.*
6F-70	RSVD	XX	–	Reserved
71	COML	00	RW	Common Mode Control L Bit[7]: Reserved Bit[6]: Data Format – PCLK output gated by HREF Enable Bit[5]: Data Format – Output HSYNC on HREF Pin Enable Bit[4]: Reserved Bit[3:2]: Data Format – HSYNC Rising Edge Delay MSB Bit[1:0]: Data Format – HSYNC Falling Edge Delay MSB
72	HSDYR	10	RW	Data Format – HSYNC Rising Edge Delay LSB HSYNCR[9:0] = MSB + LSB = COML[3:2] + HSDYR[7:0] • Range 000 to 762 pixel delays

Preliminary

Table 5 SCCB Register List

Address (Hex)	Register Name	Default (Hex)	R/W	Description
73	HSDYF	50	RW	Data Format – HSYNC Falling Edge Delay LSB HSYNCF[9:0] = MSB + LSB = COML[1:0] + HSDYF[7:0] • Range 000 to 762 pixel delays
74	COMM	20	RW	Common Mode Control M Bit[7]: Reserved Bit[6:5]: AGC – Maximum Gain Select 00: +6 dB 01: +12 dB 10: +6 dB 11: +18 dB Bit[4:0]: Reserved
75	COMN	02	RW	Common Mode Control N Bit[7]: Output Format – Vertical Flip Enable Bit[6:0]: Reserved
76	COMO	00	RW	Common Mode Control O Bit[7:6]: Reserved Bit[5]: Standby Mode Enable Bit[4:3]: Reserved Bit[2]: SCCB – Tri-State Enable – VSYNC, HREF and PCLK Bit[1:0]: Reserved
77-7D	RSVD	XX	–	Reserved
7E	AVGY	00	RW	AEC – Digital Y/G Channel Average (Automatically updated by AGC/AEC, user can only read the values)
7F	AVGR	00	RW	AEC – Digital R/V Channel Average (Automatically updated by AGC/AEC, user can only read the values) ***Note:*** *This function is not available on the B&W OV7141.*
80	AVGB	00	RW	AEC – Digital B/U Channel Average (Automatically updated by AGC/AEC, user can only read the values) ***Note:*** *This function is not available on the B&W OV7141.*
NOTE: All other registers are factory-reserved. Please contact OmniVision Technologies for reference register settings.				

Preliminary

Package Specifications

The OV7640/OV7141 uses a 28-pin plastic package. Refer to Figure 10 for package information, Table 6 for package dimensions, and Figure 11 for the array center on the chip.

Figure 10 OV7640OV7141 Plastic Package Specifications

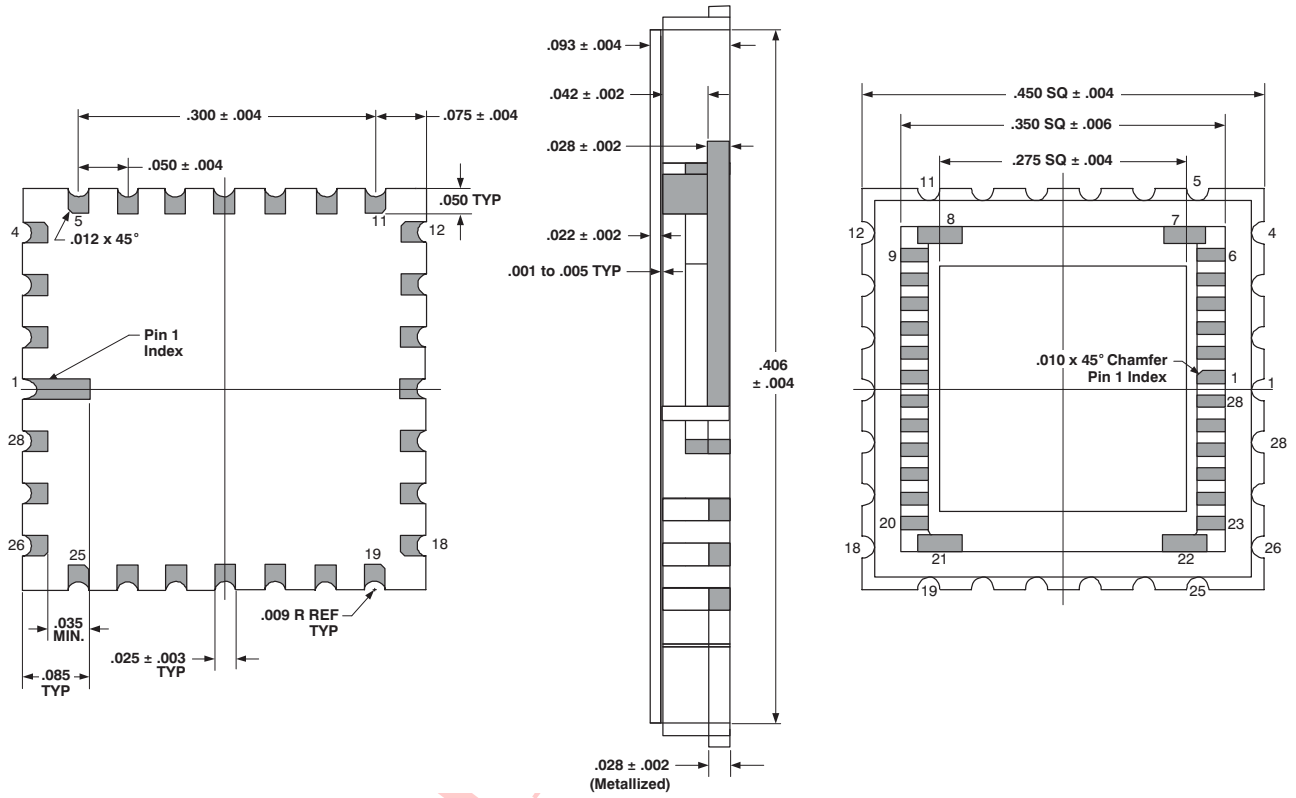

Table 6 OV7640/OV7141 Plastic Package Dimensions

Dimensions	Millimeters (mm)	Inches (in.)
Package Size	11.43 ± 0.10 SQ	.450 ± .004 SQ
Package Height	2.35 ± 0.1	.093 ± .004
Substrate Height	0.70 ± 0.05	.028 ± .002
Cavity Size	7.00 ± 0.10 SQ	.275 ± .004 SQ
Castellation Height	1.07 ± 0.05	.042 ± .002
Pin #1 Pad Size	0.64 x 2.16	.025 x .085
Pad Size	0.64 x 1.27	.025 x .050
Pad Pitch	1.27 ± 0.10	.050 ± .004
Package Edge to First Lead Center	1.90 ± 0.10	.075 ± .004
End-to-End Pad Center-Center	7.62 ± 0.10	.300 ± .004
Glass Size	10.30 ± 0.10 SQ	.406 ± .004 SQ
Glass Height	0.55 ± 0.05	.022 ± .002

Sensor Array Center

Figure 11 OV7640/OV7141 Sensor Array Center

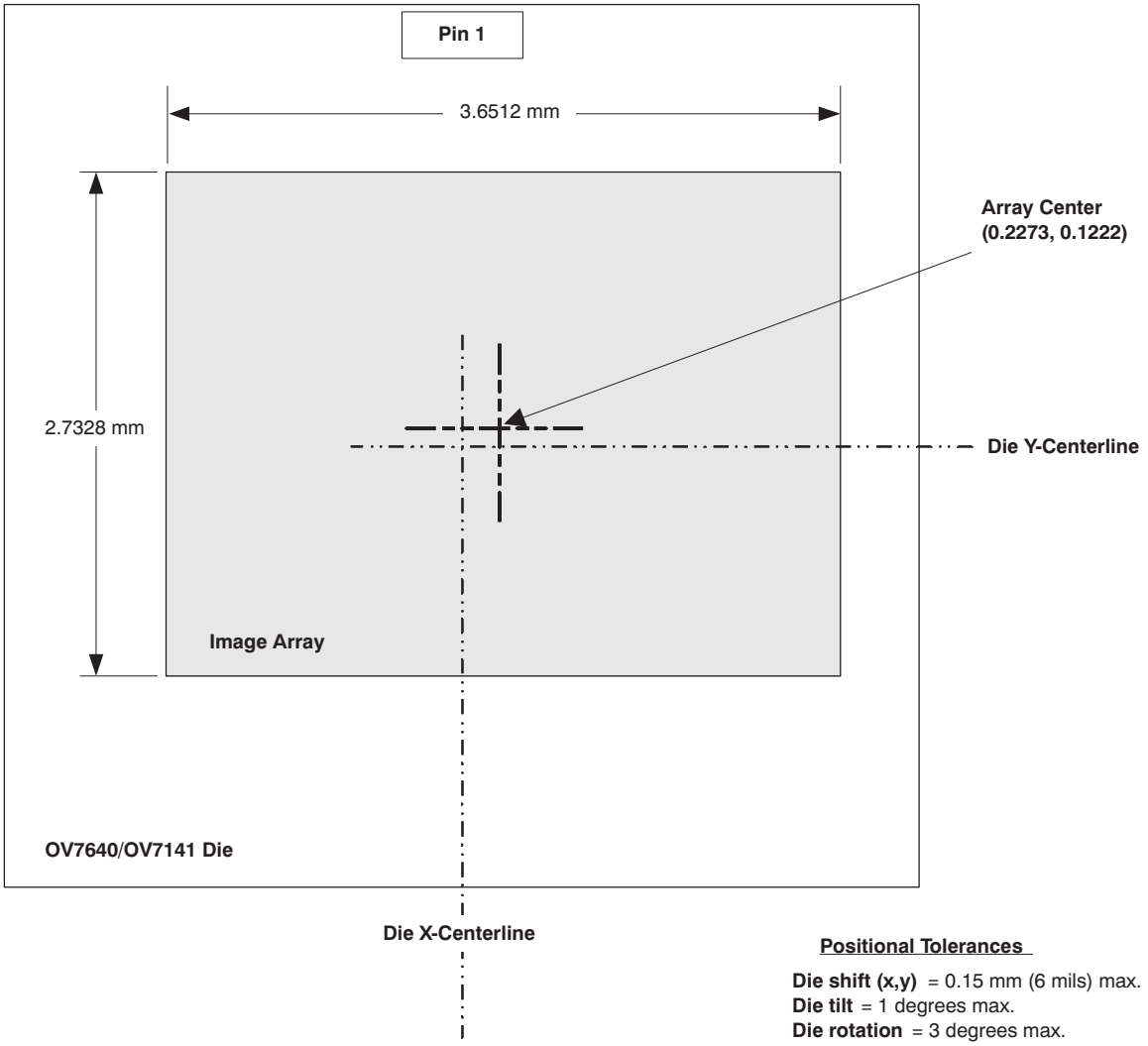

NOTES: Due to the lens inversion, in order for the image to be right-side up, the OV7640/OV7140 must be mounted Pin 1 down.

Picture is for reference only, not to scale.

IR Reflow Ramp Rate Requirements

Figure 12 IR Reflow Ramp Rate Requirements

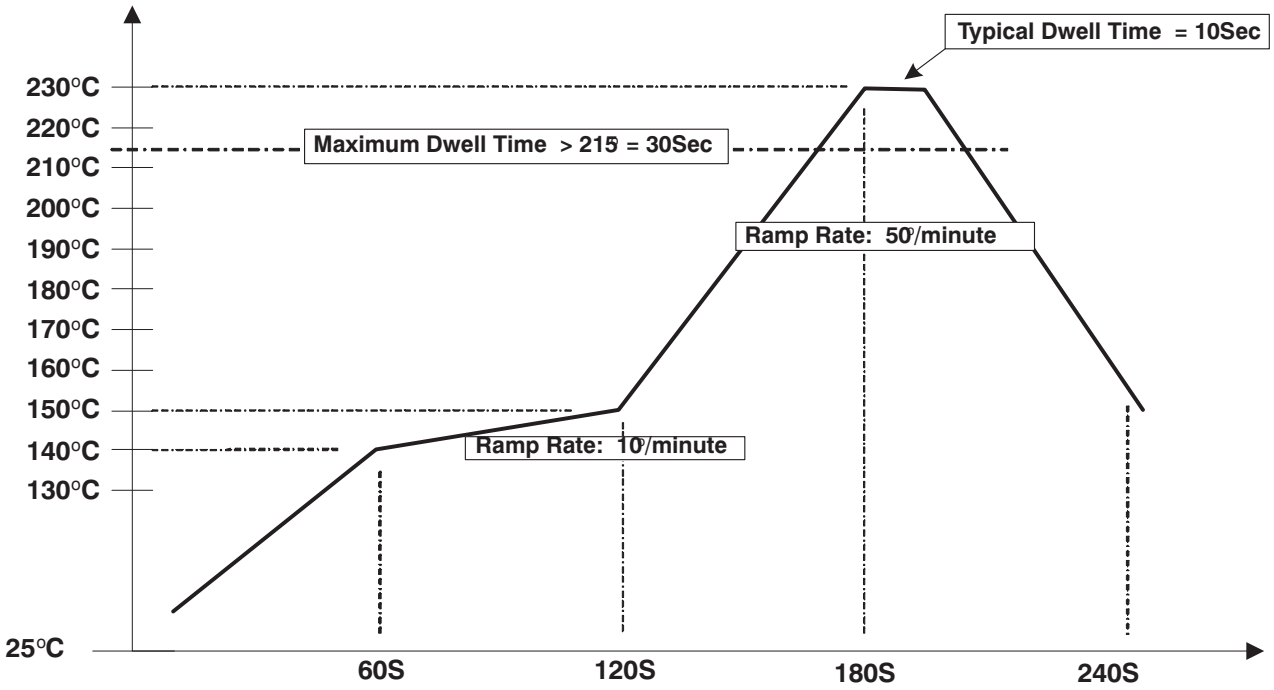

Note:

All temperatures = ± 10 °C
All times show the fastest allowable ramp rate

Pre

Note:

- *All information shown herein is current as of the revision and publication date. Please refer to the OmniVision web site (http://www.ovt.com) to obtain the current versions of all documentation.*

- *OmniVision Technologies, Inc. reserves the right to make changes to their products or to discontinue any product or service without further notice (It is advisable to obtain current product documentation prior to placing orders).*

- *Reproduction of information in OmniVision product documentation and specifications is permissible only if reproduction is without alteration and is accompanied by all associated warranties, conditions, limitations and notices. In such cases, OmniVision is not responsible or liable for any information reproduced.*

- *This document is provided with no warranties whatsoever, including any warranty of merchantability, non-infringement, fitness for any particular purpose, or any warranty otherwise arising out of any proposal, specification or sample. Furthermore, OmniVision Technologies Inc. disclaims all liability, including liability for infringement of any proprietary rights, relating to use of information in this document. No license, expressed or implied, by estoppels or otherwise, to any intellectual property rights is granted herein.*

- *'OmniVision', 'CameraChip' are trademarks of OmniVision Technologies, Inc. All other trade, product or service names referenced in this release may be trademarks or registered trademarks of their respective holders. Third-party brands, names, and trademarks are the property of their respective owners.*

For further information, please feel free to contact OmniVision at info@ovt.com.

OmniVision Technologies, Inc.
Sunnyvale, CA USA
(408) 733-3030

Preliminary

Preliminary