Ordering number : ENN*6730

CMOS IC

LC86P5420

8-Bit Single Chip Microcontroller with the One-Time Programmable PROM

Preliminary

Overview

The LC86P5420 is a CMOS 8-bit single chip microcontroller with one-time PROM for the LC865500 / LC865400 series.
This microcontroller has the function and the pin description of the LC865500 / LC865400 series mask ROM version, and the 20K-byte PROM.

Features

(1) Option switching by PROM data
The option function of the LC865400 series can be specified by the PROM data.
The LC86P5420 can be checked the functions of the trial pieces using the mass production board.
(2) Internal one-time PROM capacity : 20736 bytes
(3) Internal RAM capacity : 512 bytes

Mask ROM version	PROM capacity	RAM capacity
LC865520	20480 bytes	512 bytes
LC865516	16384 bytes	512 bytes
LC865512	12288 bytes	512 bytes
LC865508	8192 bytes	512 bytes
LC865504	4096 bytes	512 bytes
LC865412	12288 bytes	224 bytes
LC865408	8192 bytes	224 bytes
LC865404	4096 bytes	224 bytes

(4) Operating supply voltage : 4.5V to 6.0V
(5) Instruction cycle time : 1.0µs to 366µs
(6) Operating temperature : -30°C to +70°C
(7) The pin and the package compatible with the LC865400 series mask ROM devices
(8) Applicable mask ROM version : LC865520 / LC865516 / LC865512 / LC865508 / LC865504
LC865412 / LC865408 / LC865404
(9) Factory shipment : DIP42S, QFP48E

SANYO Electric Co.,Ltd. Semiconductor Company
TOKYO OFFICE Tokyo Bldg., 1-10, 1 Chome, Ueno, Taito-ku, TOKYO, 110-8534 JAPAN

Notice for use

The LC86P5420 is provided for the first release and small shipping of the LC865500 / LC865400 series.
At using, take notice of the followings.

(1) A point of difference the LC86P5420 and the LC865500 / LC865400 series

Item	LC86P5420	LC865520 / 16 / 12 / 08 / 04 LC865412 / 08 / 04
Operation after reset releasing	The option is specified by degrees until 3ms after going to a 'H' level to the reset terminal. The program is executed from 00H of the program counter.	The program is executed from 00H of the program counter immediately after going to a 'H' level to the reset terminal.
Operating supply voltage range (V_{DD})	4.5V to 6.0V	2.5V to 6.0V
Power dissipation	Refer to 'electrical characteristics' on the semiconductor news.	

The LC86P5420 functions same as the followings while resetting ; LC865520 / 16 / 12 / 08 / 04, LC865412 / 08 / 04.
The LC86P5420 uses 256 bytes that is addressed on 7F00H to 7FFFH in the program memory as the option configulation data area.

•A kind of the option corresopnding of the LC86P5420

A kind of option	Pins, Circuits	Contents of the option
Input / output form of input / output ports	Port 0	1. N-channel open drain output 2. CMOS output *1
		1. Pull-up MOS Tr. provided 2. Pull-up MOS Tr. not provided *2
	Port 1 *1	1. Input : Programmable pull-up MOS Tr. Output : N-channel open drain 2. Input : Programmable pull-up MOS Tr. Output : CMOS
	Port 3 *1	1. Input : No Programmable pull-up MOS Tr. Output : N-channel open drain 2. Input : Programmable pull-up MOS Tr. Output : CMOS

*1) Specified in bit
*2) Specified in nibble unit. Pull-up MOS Tr. is not provided in N-channel open drain output port.

(2) Option

The option data is created by the option specified program "SU86K.EXE". The created option data is linked to the program area by the linkage loader "L86K.EXE".

(3) ROM space

The LC86P5420 and LC865500 / LC865400 series use 256 bytes that is addressed on 7F00H to 7FFFH in the program memory as the option specified data area. These program memory capacity are 20480 bytes that is addressed on 0000H to 4FFFH.

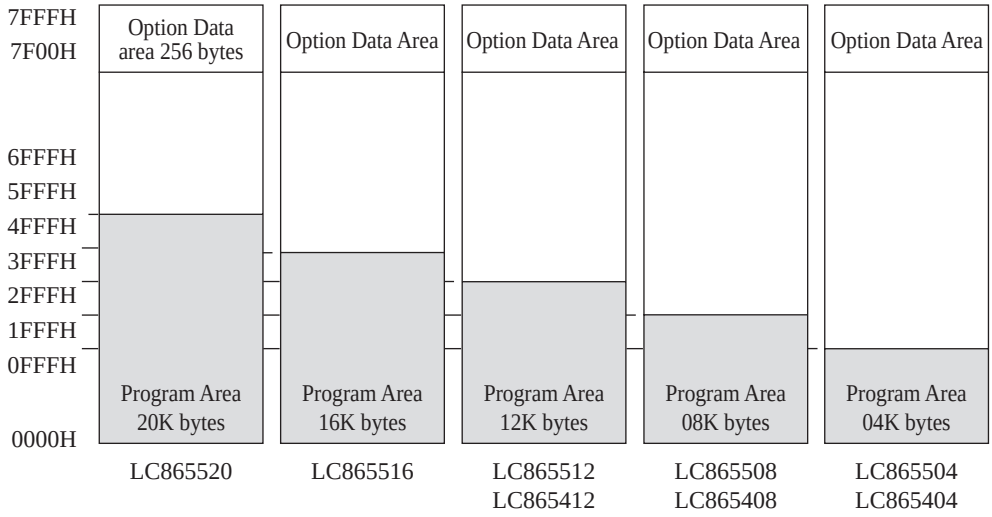

(4) Ordering information

1. When ordering the identical mask ROM and PROM devices simultaneously.
   Provide an EPROM containing the target memory contents together with the separate order forms for each of the mask ROM and PROM versions.
2. When ordering a PROM device.
   Provide an EPROM containing the target memory contents together with an order form.

How to use

(1) Create a programming data for LC86P5420

Programming data for EPROM of the LC86P5420 is required.
Debugged evaluation file (EVA file) must be converted to an INTEL-HEX formatted file (HEX file) with file converter program, EVA2HEX.EXE. The HEX file is used as the programming data for the LC86P5420.

(2) How to program for the EPROM

The LC86P5420 can be programmed by the EPROM programmer with attachment ; W86EP5420D, W86EP5420Q.

• Recommended EPROM programmer

Productor	EPROM programmer
Advantest	R4945, R4944, R4943
Andou	AF-9704
AVAL	PKW-1100, PKW-3000
Minato electronics	MODEL1890A

• "27512 (Vpp=12.5V) Intel high speed programming" mode available. The address must be set to "0000H to 7FFFH" and a jumper (DASEC) must be set to 'OFF' at programming.

(3) How to use the data security function

"Data security" is the disabled function to read the data of the EPROM.

The following is the process in order to execute the data security.

1. Set 'ON' the jumper of attachment.
2. Program again. Then the EPROM programmer displays the error. The error means normally activity of the data security. It is not a trouble of the EPROM programmer or the LSI.

Notes

- Data security is not executed when the data of all address have 'FFH' at the sequence 2 above.
- The programming by a sequential operation "BLANK=>PROGRAM=>VERIFY" cannot be executed data security at the sequence 2 above.
- Set 'OFF' to the jumper after executing the data security.

Data security

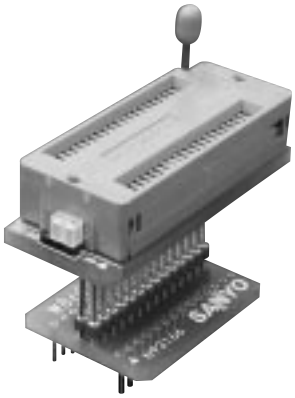

Not data security

W86EP5420D

Data security

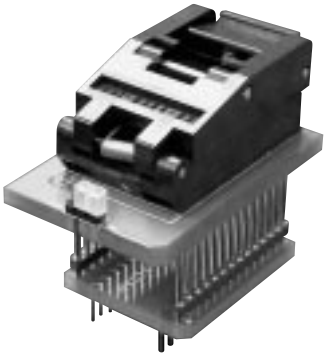

Not data security

W86EP5420Q

Pin Assignment

•DIP42S

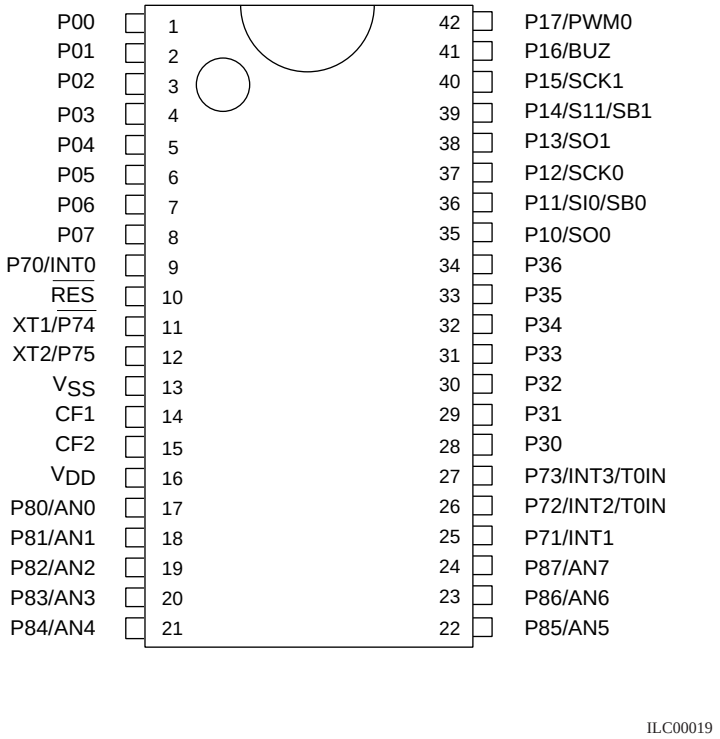

Package Dimension

(unit : mm)

3025B

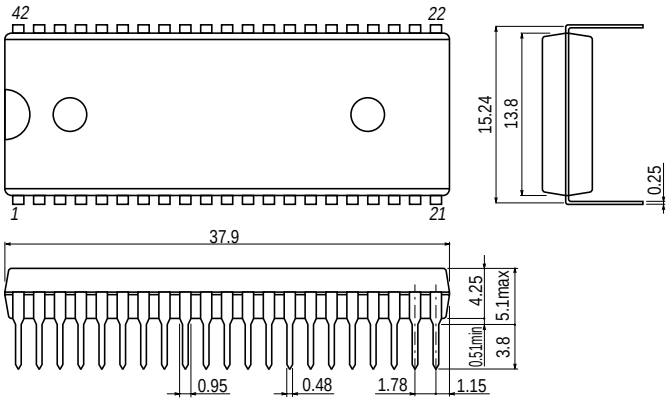

SANYO : DIP-42S(600mil)

Pin Assignment

•QFP48E

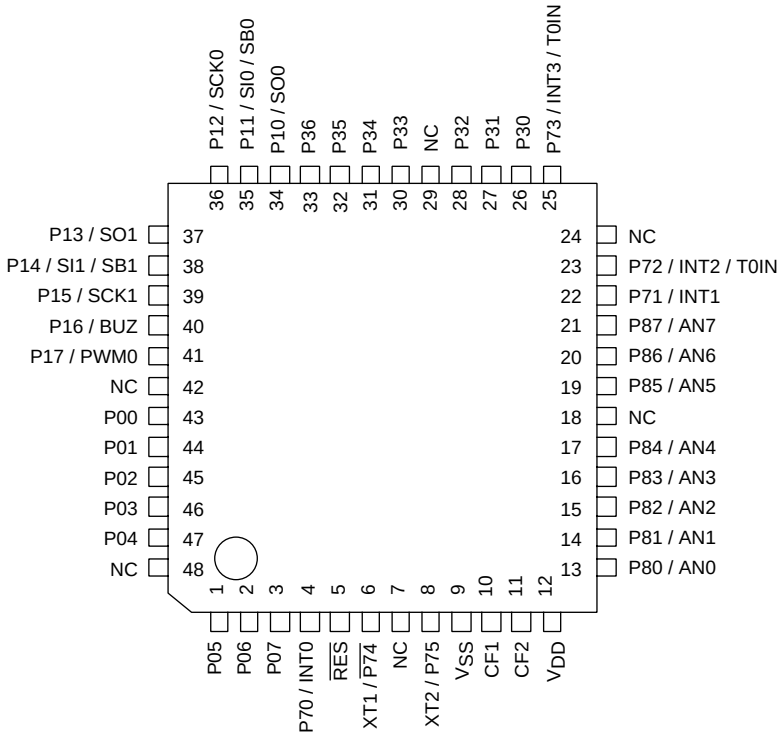

*NC pin must not connect to anything.

ILC00020

Package Dimension

(unit : mm)

3156

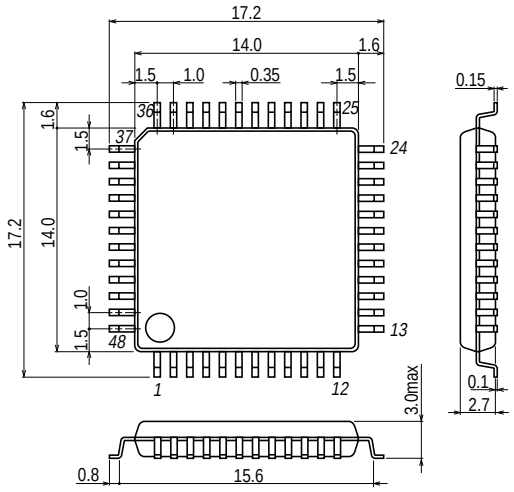

SANYO : QIP-48E

System Block Diagram

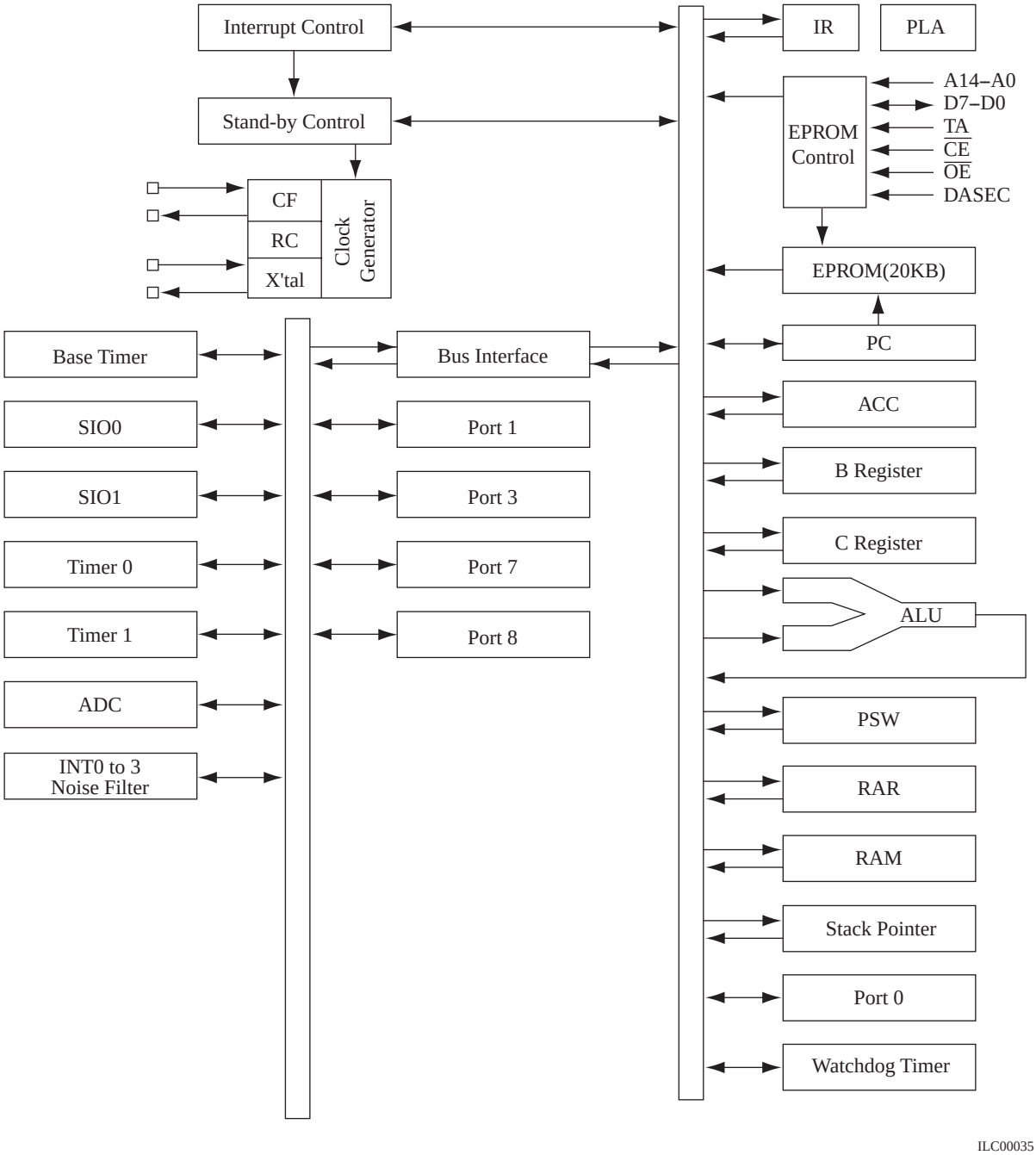

Pin Description

Pin name	I / O	Function description	Option	PROM mode
V_{SS}		Power pin (-)		
V_{DD}		Power pin (+)		
PORT0 P00 - P07	I / O	•8-bit input / output port Input / output in nibble units •Input for port 0 interrupt •Input for HOLD release •15V withstand at N-channel open drain output	•Pull-up resistor : Provided / Not provided (specify every 4-bit) •Output form : CMOS / N-channel open drain (specify in bit)	
PORT1 P10 - P17	I / O	•8-bit input / output port Input / output can be specified in bit unit. •Other pin functions P10 SIO0 data output P11 SIO0 data input / bus input / output P12 SIO0 clock input / output P13 SIO1 data output P14 SIO1 data input / bus input / output P15 SIO1 clock input / output P16 Buzzer output P17 Timer1 (PWM0) output	•Output form : CMOS / N-channel open drain (specify in bit)	Data line D0 to D7
PORT3 P30 - P36	I / O	•7-bit input / output port Input / output in bit unit •15V withstand at N-channel open drain output	•Pull-up resistor : Provided / Not provided •Output form : CMOS / N-channel open drain	
PORT7 P70 - P73 $\overline{P74}$, P75	 I / O I	•4-bit input / output port Input / output in bit unit •2-bit input port •Other pin functions P70 : INT0 input / HOLD release input / N-channel Tr. output for watchdog timer P71 : INT1 input / HOLD release input P72 : INT2 input / timer 0 event input P73 : INT3 input with noise filter / timer 0 event input $\overline{P74}$: Input pin XT1 for 32.768kHz crystal oscillation P75 : Output pin XT2 for 32.768kHz crystal oscillation •Interrupt received form, vector address		PROM control signals •*DASEC (*1)* •*$\overline{OE}$ (*2)* •*$\overline{CE}$ (*3)*

	rising	falling	rising & falling	high level	low level	vector
INT0	enable	enable	disable	enable	enable	03H
INT1	enable	enable	disable	enable	enable	0BH
INT2	enable	enable	enable	disable	disable	13H
INT3	enable	enable	enable	disable	disable	1BH

Pin name	I / O	Function description	Option	PROM mode
PORT8 P80 - P83 P84 - P87	 I I / O	 •4-bit input port •4-bit input / output port Input / output can be specified in bit unit •Other function AD input port (AN7 to AN0)		 TA (*4)
$\overline{RES}$	I	Reset pin		
XT1 / $\overline{P74}$	I	•Input pin for the 32.768kHz cyrstal oscillation •Other function XT1 : Input port $\overline{P74}$ In case of non use, connect to V_{DD}		
XT2 / P75	O	•Output pin for the 32.768kHz crystal oscillation •Other function XT2 : Input port P75 In case of non use, connect to V_{DD} at using as port or unconnect at using as oscillation.		
CF1	I	Input pin for the ceramic resonator oscillation		
CF2	O	Output pin for the ceramic resonator oscillation		

■ All of port options except the pull-up resistor option of Port 0 can be specified in a bit unit.

*1 Memory select input for data security
*2 Output enable input
*3 Chip enable input
*4 TA–> PROM control signal input

1. Absolute Maximum Ratings at V_{SS}= 0V and Ta=25°C

Parameter		Symbol	Pins	Conditions	VDD [V]	Ratings min.	Ratings typ.	Ratings max.	unit
Supply voltage		V_{DD}MAX	V_{DD}	V_{DD}		-0.3		+7.0	V
Input voltage		VI(1)	•Ports $\overline{74}$, 75 •Ports 80, 81, 82, 83 •$\overline{RES}$			-0.3		V_{DD}+0.3	
Input / output voltage		VIO(1)	•Port 1 •Ports 70, 71, 72, 73 •Ports 84, 85, 86, 87 •Ports 0,3 at CMOS output option			-0.3		VDD+0.3	
		VIO(2)	Ports 0, 3 at N-ch open drain output option			-0.3		15	
High Level output current	Peak output current	IOPH	•Ports 0, 1, 3 •Ports 71, 72, 73 •Ports 84, 85, 86, 87	CMOS output At each pins		-10			mA
	Total output current	∑IOAH(1)	Ports 0, 1	The total all pins		-30			
		∑IOAH(2)	Port 3	The total all pins		-15			
		∑IOAH(3)	•Ports 71, 72, 73 •Ports 84, 85, 86, 87	The total all pins		-10			
Low Level output current	Peak output current	IOPL(1)	Ports 0, 1, 3	At each pins				20	
		IOPL(2)	•Ports 70, 71, 72, 73 •Ports 84, 85, 86, 87	At each pins				15	
	Total output current	∑IOAL(1)	Ports 0, 1, 70	The total all pins				60	
		∑IOAL(2)	Port 3	The total all pins				40	
		∑IOAL(3)	•Ports 71, 72, 73 •Ports 84, 85, 86, 87	The total all pins				20	
Power dissipation (max.)		Pd max (1)	DIP42S	Ta=-30 to +70°C				630	mW
		Pd max (2)	QFP48E	Ta=-30 to +70°C				410	
Operating temperature range		Topg				-30		70	°C
Storage temperature range		Tstg				-65		150	

2. Recommended Operating Range at Ta= –30°C to +70°C, V_{SS}=0V

Parameter	Symbol	Pins	Conditions	V_{DD} [V]	Ratings min.	Ratings typ.	Ratings max.	unit
Operating supply voltage range	V_{DD}	V_{DD}	0.98μs≤ tCYC tCYC≤400μs		4.5		6.0	V
HOLD voltage	VHD	V_{DD}	RAMs and Registers hold voltage at HOLD mode.		2.0		6.0	
Input high voltage	VIH(1)	Port 0 at CMOS output	Output disable	4.5 to 6.0	0.33V_{DD} +1.0		V_{DD}	
	VIH(2)	Port 0 at N-ch open drain output option.	Output disable	4.5 to 6.0	0.75V_{DD}		13.5	
	VIH(3)	•Port 1 •Ports 72, 73 •Port 3 at CMOS output	Output disable	4.5 to 6.0	0.75V_{DD}		V_{DD}	
	VIH(4)	Port 3 at N-ch open drain output option.	Output disable	4.5 to 6.0	0.75V_{DD}		13.5	
	VIH(5)	•Port 70 Port input / interrupt •Port 71 •$\overline{RES}$	Output disable	4.5 to 6.0	0.75V_{DD}		V_{DD}	
	VIH(6)	Port 70 Watchdog timer	Output disable	4.5 to 6.0	0.9V_{DD}		V_{DD}	
	VIH(7)	•Port 8 •Ports $\overline{74}$, 75	Output disable Using as port	4.5 to 6.0	0.75V_{DD}		V_{DD}	
Input low voltage	VIL(1)	Port 0 at CMOS output option	Output disable	4.5 to 6.0	V_{SS}		0.2V_{DD}	
	VIL(2)	Port 0 at N-ch open drain output option.	Output disable	4.5 to 6.0	V_{SS}		0.25V_{DD}	
	VIL(3)	•Ports 1, 3 •Ports 72, 73	Output disable	4.5 to 6.0	V_{SS}		0.25V_{DD}	
	VIL(4)	•Port 70 Port input / interrupt •Port 71 •$\overline{RES}$	Output disable	4.5 to 6.0	V_{SS}		0.25V_{DD}	
	VIL(5)	Port 70 Watchdog timer	Output disable	4.5 to 6.0	V_{SS}		0.8V_{DD} -1.0	
	VIL(6)	•Port 8 •Ports $\overline{74}$, 75	Output disable Using as port	4.5 to 6.0	V_{SS}		0.25V_{DD}	
Operation cycle time	tCYC			4.5 to 6.0	0.98		400	μs

Parameter	Symbol	Pins	Conditions		Ratings			unit
				V_{DD} [V]	min.	typ.	max.	
Oscillation frequency range (Note 1)	FmCF(1)	CF1, CF2	•6MHz (ceramic resonator oscillation) •Refer to figure 1	4.5 to 6.0	5.88	6	6.12	MHz
	FmCF(2)	CF1, CF2	•3MHz (ceramic resonator oscillation) •Refer to figure 1	4.5 to 6.0	2.94	3	3.06	
	FmRC		RC oscillation	4.5 to 6.0	0.3	0.8	3.0	
	FsXtal	XT1, XT2	•32.768kHz (crystal oscillation) •Refer to figure 2	4.5 to 6.0		32.768		kHz
Oscillation stable time period (Note 1)	tmsCF(1)	CF1, CF2	•6MHz (ceramic resonator oscillation) •Refer to figure 3	4.5 to 6.0		0.05	0.50	ms
	tmsCF(2)	CF1, CF2	•3MHz (ceramic resonator oscillation) •Refer to figure 3	4.5 to 6.0		0.10	1.00	
	tssXtal	XT1, XT2	•32.768kHz (crystal oscillation) •Refer to figure 3	4.5 to 6.0		1.00	1.50	s

(Note 1) The oscillation constant is shown on table 1 and table 2.

3. Electrical Characteristics at Ta= –30°C to +70°C, V_{SS}=0V

Parameter	Symbol	Pins	Conditions	V_{DD} [V]	Ratings min.	Ratings typ.	Ratings max.	unit
Input high current	IIH(1)	Ports 0, 3 of Open drein output	•Output disable •V_{IN}=13.5V (including off-leak current of the output Tr.)	4.5 to 6.0			5	μA
	IIH(2)	•Port 0 without pull-up MOS Tr. •Ports 1, 3 •Ports 70, 71, 72, 73 •Port 8	•Output disable •Pull-up MOS Tr. OFF. •V_{IN}=V_{DD} (including off-leak current of the output Tr.)	4.5 to 6.0			1	
	IIH(3)	$\overline{RES}$	V_{IN}=V_{DD}	4.5 to 6.0			1	
	IIH(4)	Ports $\overline{74}$, 75	V_{IN}=V_{DD} at using as port	4.5 to 6.0			1	
Input low current	IIL(1)	•Ports 1, 3, •Port 0 without pull-up MOS Tr. •Ports 70, 71, 72, 73 •Port 8	•Output disable •Pull-up MOS Tr. OFF. •V_{IN}=V_{SS} (including off-leak current of the output Tr.)	4.5 to 6.0	-1			
	IIL(2)	$\overline{RES}$	V_{IN}=V_{SS}	4.5 to 6.0	-1			
	IIL(3)	Ports $\overline{74}$, 75	V_{IN}=V_{SS} at using as port	4.5 to 6.0	-1			
Output high voltage	VOH(1)	Ports 0, 1, 3 of CMOS output •Ports 71, 72, 73 •Ports 84, 85, 86, 87	IOH=-1.0mA	4.5 to 6.0	V_{DD}-1			V
	VOH(2)		IOH=-0.1mA	4.5 to 6.0	V_{DD}-0.5			
Output low voltage	VOL(1)	Ports 0, 1, 3	IOL=10mA	4.5 to 6.0			1.5	
	VOL(2)		IOL=1.6mA	4.5 to 6.0			0.4	
	VOL(3)	•Ports 71, 72, 73 •Ports 84, 85, 86, 87	IOL=1.6mA	4.5 to 6.0			0.4	
	VOL(4)	Port 70	IOL=1.0mA	4.5 to 6.0			0.4	
Pull-up MOS Tr. resistor	Rpu	•Ports 0, 1, 3 •Ports 70, 71, 72, 73 •Ports 84, 85, 86, 87	VOH=0.9 V_{DD}	4.5 to 6.0	15	40	70	kΩ
Hysteresis voltage	VHIS	•Port 1 •Ports 70, 71, 72, 73 •$\overline{RES}$	Output disable	4.5 to 6.0		0.1V_{DD}		V
Pin capacitance	CP	All pins	•f=1MHz Unmeasurement terminals for input are set to V_{SS} level. •Ta=25°C	4.5 to 6.0		10		pF

4. Serial Input / Output Characteristics at Ta=-30°C to +70°C, V_{SS}= 0V

Parameter			Symbol	Pins	Conditions	V_{DD} [V]	Ratings min.	Ratings typ.	Ratings max.	unit
Serial clock	Input clock	Cycle	tCKCY(1)	SCK0, SCK1	Refer to figure 5	4.5 to 6.0	2			tCYC
		Low level width	tCKL(1)			4.5 to 6.0	1			
		High level pulse width	tCKH(1)			4.5 to 6.0	1			
	Output clock	Cycle	tCKCY(2)	SCK0, SCK1	•Use pull-up resistor (1kΩ) when open drain output. •Refer to figure 5	4.5 to 6.0	2			
		Low level pulse width	tCKL(2)			4.5 to 6.0		1 / 2 tCKCY		
		High level pulse width	tCKH(2)			4.5 to 6.0		1 / 2 tCKCY		
Serial input	Data set-up time		tICK	•SI0, SI1 •SB0, SB1	•Data set-up to SCK0, 1 •Data hold from SCK0, 1 •Refer to figure 5	4.5 to 6.0	0.1			µs
	Data hold time		tCKI			4.5 to 6.0	0.1			
Serial output	Output delay time (Serial clock is extrnal clock)		tCKO(1)	•SO0, SO1 •SB0, SB1	•Use pull-up resistor (1kΩ) when open drain output.	4.5 to 6.0			7 / 12 tCYC +0.2	
	Output delay time (Serial clock is internal clock)		tCKO(2)		•Data hold from SCK0, 1 •Refer to figure 5	4.5 to 6.0			1 / 3 tCYC +0.2	

5. Pulse Input Conditions at Ta=-30°C to +70°C , V_{SS} = 0V

Parameter	Symbol	Pins	Conditions	V_{DD} [V]	Ratings min.	Ratings typ.	Ratings max.	unit
High / low level pulse width	tPIH(1) tPIL(1)	•INT0, INT1 •INT2 / T0IN	•Interrupt acceptable •Timer0-countable	4.5 to 6.0	1			tCYC
	tPIH(2) tPIL(2)	INT3 / T0IN (The noise rejection clock select to 1 / 1.)	•Interrupt acceptable •Timer0-countable	4.5 to 6.0	2			
	tPIH(3) tPIL(3)	INT3 / T0IN (The noise rejection clock select to 1 / 16.)	•Interrupt acceptable •Timer0-countable	4.5 to 6.0	32			
	tPIH(4) tPIL(4)	INT3 / T0IN (The noise rejection clock select to 1 / 64.)	•Interrupt acceptable •Timer0-countable	4.5 to 6.0	128			
	tPIL(5)	$\overline{RES}$	Reset acceptable	4.5 to 6.0	200			μs

6. A / D Converter Characteristics at Ta=-30°C to +70°C , VSS = 0V

Parameter	Symbol	Pins	Conditions	V_{DD} [V]	Ratings min.	Ratings typ.	Ratings max.	unit
Resolution	N			4.5 to 6.0		8		bit
Absolute precision (Note 2)	ET			4.5 to 6.0			±1.5	LSB
Conversion time	tCAD		AD conversion time=16 × tCYC (ADCR2=0) (Note 3)	4.5 to 6.0	15.68 (tCYC = 0.98μs)		65.28 (tCYC = 4.08μs)	μs
			AD conversion time=32 × tCYC (ADCR2=1) (Note 3)		31.36 (tCYC = 0.98μs)		130.56 (tCYC = 4.08μs)	
Analog input voltage range	VAIN	AN0 to AN7		4.5 to 6.0	V_{SS}		V_{DD}	V
Analog port input current	IAINH		VAIN=V_{DD}	4.5 to 6.0			1	μA
	IAINL		VAIN=V_{SS}	4.5 to 6.0	-1			

(Note 2) Absolute precision excepts quantizing error (±1 / 2 LSB).

(Note 3) The conversion time means the time from executing the AD conversion instruction to setting the complete digital conversion value to the register.

7. Current Dissipation Characteristics at Ta=-30°C to +70°C, V_{SS} = 0V

Parameter	Symbol	Pins	Conditions	V_{DD} [V]	Ratings min.	Ratings typ.	Ratings max.	unit
Current dissipation during basic operation (Note 4)	IDDOP(1)	V_{DD}	•FmCF=6MHz Ceramic resonator oscillation •FsXtal=32.768kHz crystal oscillation •System clock : CF oscillation •Internal RC oscillation stops. •1 / 1 divider	4.5 to 6.0		14	26	mA
	IDDOP(2)		•FmCF=3MHz Ceramic resonator oscillation •FsXtal=32.768kHz crystal oscillation •System clock : CF oscillation •Internal RC oscillation stops. •1 / 2 divider	4.5 to 6.0		6.5	14	
	IDDOP(3)		•FmCF=0Hz (when oscillation stops). •FsXtal=32.768kHz crystal oscillation •System clock : RC oscillation •1 / 2 divider	4.5 to 6.0		4	12	
	IDDOP(4)		•FmCF=0Hz (when oscillation stops). •FsXtal=32.768kHz crystal oscillation •System clock : crystal oscillation •Internal RC oscillation stops. •1 / 2 divider	4.5 to 6.0		3.5	9	

Parameter	Symbol	Pins	Conditions	V_{DD} [V]	Ratings min.	Ratings typ.	Ratings max.	unit
Current dissipation HALT mode (Note 4)	IDDHALT(1)	V_{DD}	•HALT mode •FmCF=6MHz Ceramic resonator oscillation •FsXtal=32.768kHz crystal oscillation •System clock : CF oscillation •Internal RC oscillation stops. •1 / 1 devider	4.5 to 6.0		4	9	mA
	IDDHALT(2)		•HALT mode FmCF=3MHz Ceramic resonator oscillation •FsXtal=32.768kHz crystal oscillation •System clock : CF oscillation •Internal RC oscillation stops. •1 / 2 devider	4.5 to 6.0		2.2	5	
	IDDHALT(3)		•HALT mode FmCF=0Hz (when oscillation stops). •FsXtal=32.768kHz crystal oscillation •System clock : RC oscillation •1 / 2 devider	4.5 to 6.0		400	1600	μA
	IDDHALT(4)		•HALT mode FmCF=0Hz (when oscillation stops). •FsXtal=32.768kHz crystal oscillation •System clock : 32.768kHz •Internal RC oscillation stops. •1 / 2 devider	4.5 to 6.0		25	100	
Current dissipation HOLD mode (Note 4)	IDDHOLD	V_{DD}	HOLD mode	4.5 to 6.0		0.05	30	

(Note 4) The currents of output transistors and pull-up MOS transistors are ignored.

Table 1. Ceramic resonator oscillation guaranteed constant (main-clock)

A kind of oscillation	Producer	Oscillator	C1	C2
6MHz ceramic resonator oscillation	Murata	CSA 6.00MG	33pF	33pF
		CST 6.00MGW	on chip	
	Kyocera	KBR-6.0MSA	33pF	33pF
		PBRC 6.00A (chip type)	33pF	33pF
		KBR-6.0MKS	on chip	
		PBRC 6.00B (chip type)		
3MHz ceramic resonator oscillation	Murata	CSA 3.00MG	33pF	33pF
		CST 3.00MGW	on chip	
	Kyocera	KBR-3.0MS	47pF	47pF

* Both C1 and C2 must use K rank (±10%) and SL characteristics.

Table 2. Crystal oscillation guaranteed constant (sub-clock)

A kind of oscillation	Producer	Oscillator	C3	C4
32.768kHz crystal oscillation	Kyocera	KF-38G-13P0200	18pF	18pF

* Both C3 and C4 must use J rank (±5%) and CH characteristics.
(It is about the application which is not in need of high precision. Use K rank (±10%) and SL characteristics.)

Notes
- Since the circuit pattern affects the oscillation frequency, place the oscillation-related parts as close to the oscillation pins as possible with the shortest possible pattern length.
- If you use other oscillators herein, we provide no guarantee for the characteristics.

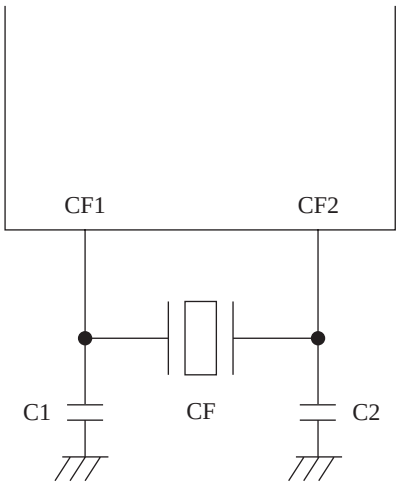

Figure 1. Main-clock circuit
Ceramic resonator oscillation

ILC00059

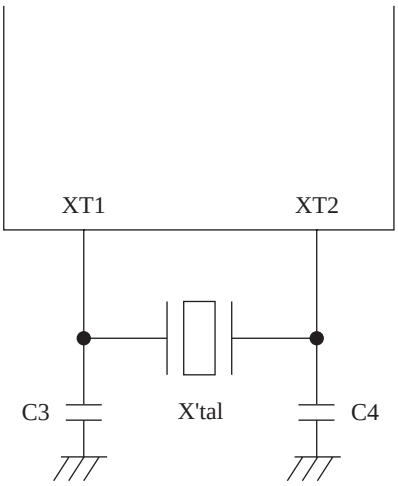

Figure 2. Sub-clock circuit
Cryatal oscillation

ILC00065

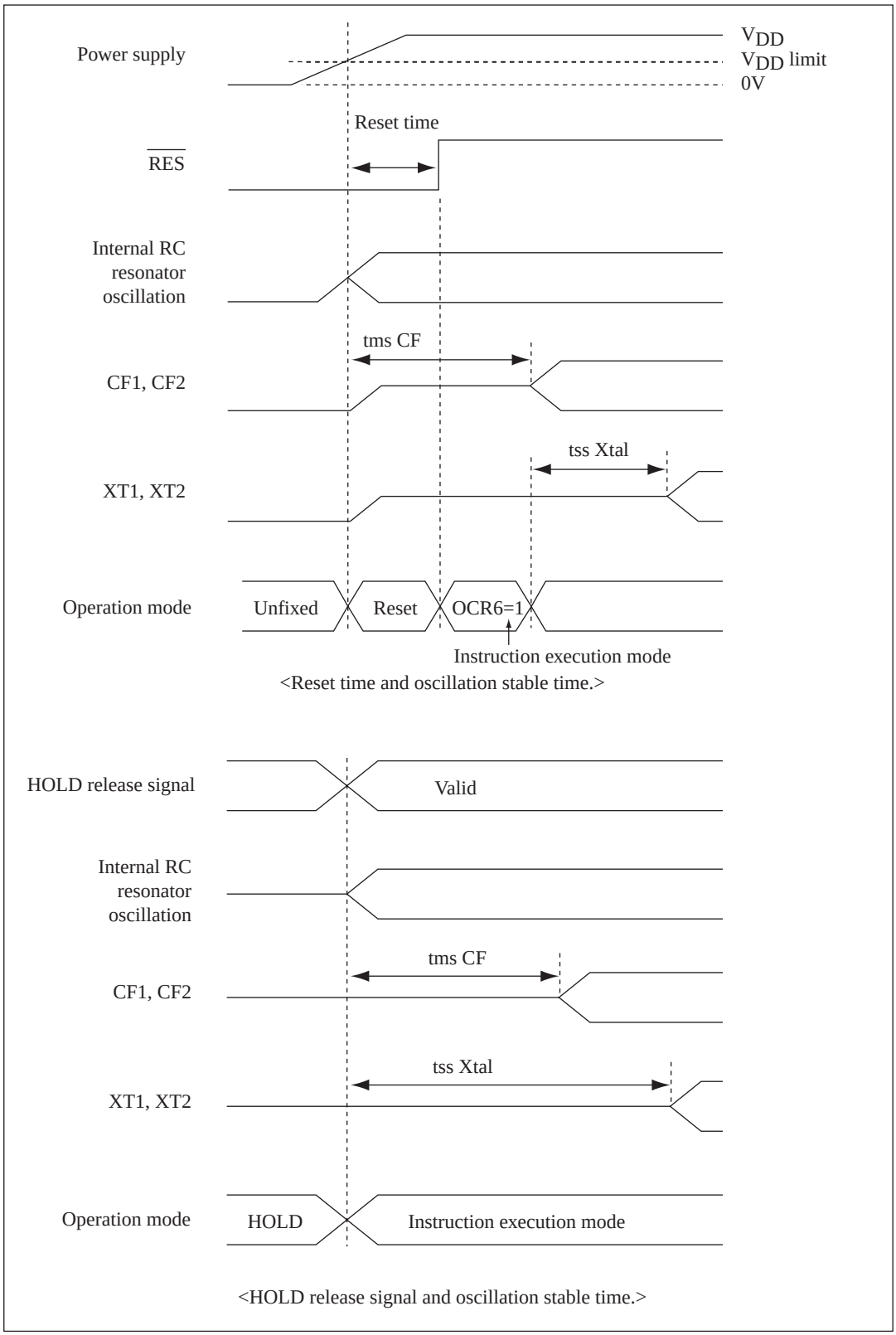

Figure 3. Oscillation stable time

ILC00044

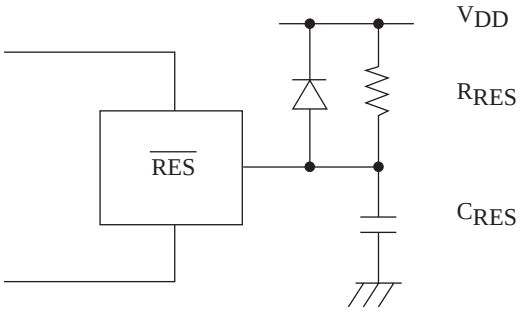

(Note) Fix the value of R_{RES}, C_{RES} that is sure to reset untill 200µs, after Power supply has been over inferior limit of supply voltage.

Figure 4. Reset circuit

ILC00052

<AC timing point>

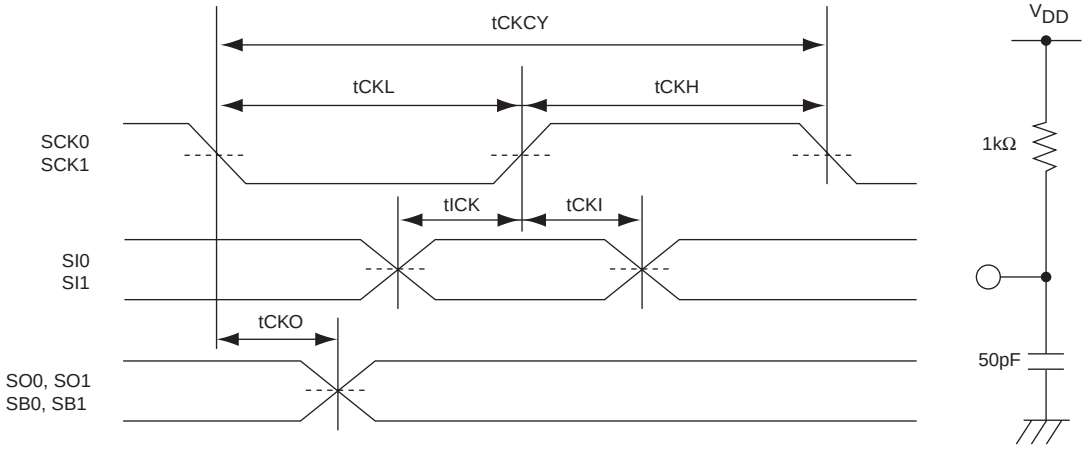

<Timing>

<Test load>

Figure 5. Serial input / output test condition

ILC00073

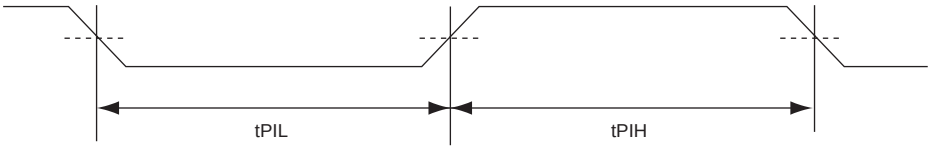

Figure 6. Pulse input timing condition

ILC00074

Notice for use

- The construction of the one-time programmable microcomputer with a blank built-in PROM makes it impossible for Sanyo to completely factory-test it before shipping. To probe reliability of the programmed devices, the screening procedure shown in the following figure should always be followed.

- It is not possible to perform a writing test on the blank PROM. 100% yield, therefore, cannot be guaranteed.

- Keeping the dry packing
  The environment must be held at a temparature of 30°C or less and a humidity level of 70% or less.

- After opening the packing
  After opening the packing, a controlled environment must be maintained until soldering.
  The environment must be held at a temperature of 30°C or less and a humidity level of 70% or less.
  Please solder within 96 hours.

a. Shipping with a blank PROM (Programming the data by yourself)
This microcomputer is provided DIP / QFP packages, but the condition before mounting is different. Refer to the mounting procedure as follows.

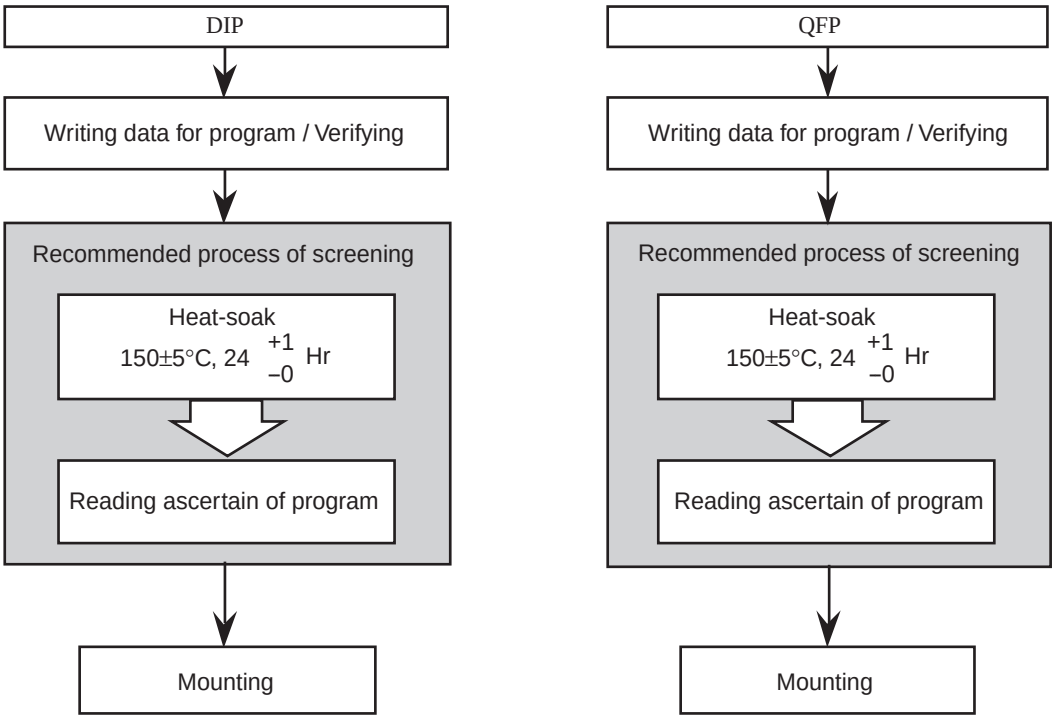

b. Shipping with a programmed PROM (Programming the data by Sanyo)

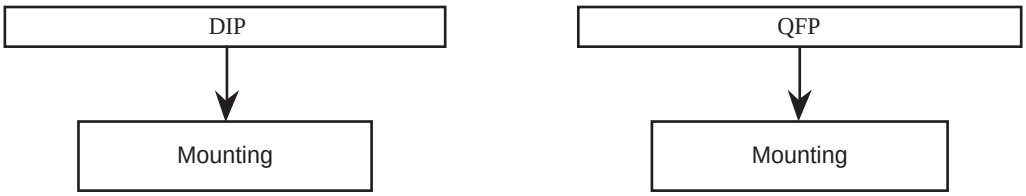

memo :