查询STP5NA80供应商

SGS-THOMSON MICROELECTRONICS

STP5NA80
STP5NA80FI

N - CHANNEL ENHANCEMENT MODE FAST POWER MOS TRANSISTOR

TYPE	V_{DSS}	$R_{DS(on)}$	I_D
STP5NA80	800 V	< 2.4 Ω	4.7 A
STP5NA80FI	800 V	< 2.4 Ω	2.8 A

- TYPICAL $R_{DS(on)}$ = 1.8 Ω
- ± 30V GATE TO SOURCE VOLTAGE RATING
- 100% AVALANCHE TESTED
- REPETITIVE AVALANCHE DATA AT 100°C
- LOW INTRINSIC CAPACITANCES
- GATE GHARGE MINIMIZED
- REDUCED THRESHOLD VOLTAGE SPREAD

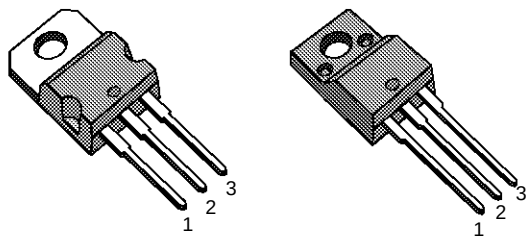

TO-220 ISOWATT220

DESCRIPTION

This series of POWER MOSFETS represents the most advanced high voltage technology. The optimized cell layout coupled with a new proprietary edge termination concur to give the device low $R_{DS(on)}$ and gate charge, unequalled ruggedness and superior switching performance.

INTERNAL SCHEMATIC DIAGRAM

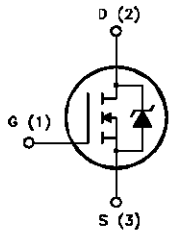

APPLICATIONS

- HIGH CURRENT, HIGH SPEED SWITCHING
- SWITCH MODE POWER SUPPLIES (SMPS)
- DC-AC CONVERTERS FOR WELDING EQUIPMENT AND UNINTERRUPTIBLE POWER SUPPLIES AND MOTOR DRIVE

ABSOLUTE MAXIMUM RATINGS

Symbol	Parameter	Value		Unit
		STP5NA80	STP5NA80FI	
V_{DS}	Drain-source Voltage (V_{GS} = 0)	800		V
V_{DGR}	Drain-gate Voltage (R_{GS} = 20 kΩ)	800		V
V_{GS}	Gate-source Voltage	± 30		V
I_D	Drain Current (continuous) at T_c = 25 °C	4.7	2.8	A
I_D	Drain Current (continuous) at T_c = 100 °C	3	1.8	A
I_{DM}(•)	Drain Current (pulsed)	19	19	A
P_{tot}	Total Dissipation at T_c = 25 °C	125	45	W
	Derating Factor	1	0.36	W/°C
V_{ISO}	Insulation Withstand Voltage (DC)	—	2000	V
T_{stg}	Storage Temperature	-65 to 150		°C
T_j	Max. Operating Junction Temperature	150		°C

(•) Pulse width limited by safe operating area

THERMAL DATA

			TO-220	ISOWATT220	
$R_{thj-case}$	Thermal Resistance Junction-case	Max	1	2.78	$^oC/W$
$R_{thj-amb}$ $R_{thc-sink}$ T_l	Thermal Resistance Junction-ambient Thermal Resistance Case-sink Maximum Lead Temperature For Soldering Purpose	Max Typ	62.5 0.5 300		$^oC/W$ $^oC/W$ ^oC

AVALANCHE CHARACTERISTICS

Symbol	Parameter	Max Value	Unit
I_{AR}	Avalanche Current, Repetitive or Not-Repetitive (pulse width limited by T_j max, $\delta < 1\%$)	4.7	A
E_{AS}	Single Pulse Avalanche Energy (starting $T_j = 25\ ^oC$, $I_D = I_{AR}$, $V_{DD} = 50$ V)	110	mJ
E_{AR}	Repetitive Avalanche Energy (pulse width limited by T_j max, $\delta < 1\%$)	4.5	mJ
I_{AR}	Avalanche Current, Repetitive or Not-Repetitive ($T_c = 100\ ^oC$, pulse width limited by T_j max, $\delta < 1\%$)	3	A

ELECTRICAL CHARACTERISTICS ($T_{case} = 25\ ^oC$ unless otherwise specified)

OFF

Symbol	Parameter	Test Conditions	Min.	Typ.	Max.	Unit
$V_{(BR)DSS}$	Drain-source Breakdown Voltage	$I_D = 250\ \mu A$ $V_{GS} = 0$	800			V
I_{DSS}	Zero Gate Voltage Drain Current ($V_{GS} = 0$)	V_{DS} = Max Rating V_{DS} = Max Rating x 0.8 $T_c = 125\ ^oC$			25 250	µA µA
I_{GSS}	Gate-body Leakage Current ($V_{DS} = 0$)	$V_{GS} = \pm 30$ V			± 100	nA

ON (*)

Symbol	Parameter	Test Conditions	Min.	Typ.	Max.	Unit
$V_{GS(th)}$	Gate Threshold Voltage	$V_{DS} = V_{GS}$ $I_D = 250\ \mu A$	2.25	3	3.75	V
$R_{DS(on)}$	Static Drain-source On Resistance	$V_{GS} = 10V$ $I_D = 2.5$ A		1.8	2.4	Ω
$I_{D(on)}$	On State Drain Current	$V_{DS} > I_{D(on)} \times R_{DS(on)max}$ $V_{GS} = 10$ V	4.7			A

DYNAMIC

Symbol	Parameter	Test Conditions	Min.	Typ.	Max.	Unit
g_{fs} (*)	Forward Transconductance	$V_{DS} > I_{D(on)} \times R_{DS(on)max}$ $I_D = 2.5$ A	2.7	5.2		S
C_{iss} C_{oss} C_{rss}	Input Capacitance Output Capacitance Reverse Transfer Capacitance	$V_{DS} = 25$ V f = 1 MHz $V_{GS} = 0$		1250 140 35	1700 190 50	pF pF pF

ELECTRICAL CHARACTERISTICS (continued)

SWITCHING ON

Symbol	Parameter	Test Conditions	Min.	Typ.	Max.	Unit
$t_{d(on)}$ t_r	Turn-on Time Rise Time	V_{DD} = 400 V I_D = 2.5 A R_G = 47 Ω V_{GS} = 10 V (see test circuit, figure 3)		40 100	55 135	ns ns
$(di/dt)_{on}$	Turn-on Current Slope	V_{DD} = 640 V I_D = 5 A R_G = 47 Ω V_{GS} = 10 V (see test circuit, figure 5)		180		A/µs
Q_g Q_{gs} Q_{gd}	Total Gate Charge Gate-Source Charge Gate-Drain Charge	V_{DD} = 640 V I_D = 5 A V_{GS} = 10 V		55 8 24	75	nC nC nC

SWITCHING OFF

Symbol	Parameter	Test Conditions	Min.	Typ.	Max.	Unit
$t_{r(Voff)}$ t_f t_c	Off-voltage Rise Time Fall Time Cross-over Time	V_{DD} = 640 V I_D = 5 A R_G = 47 Ω V_{GS} = 10 V (see test circuit, figure 5)		75 25 110	100 35 150	ns ns ns

SOURCE DRAIN DIODE

Symbol	Parameter	Test Conditions	Min.	Typ.	Max.	Unit
I_{SD} I_{SDM}(•)	Source-drain Current Source-drain Current (pulsed)				4.7 19	A A
V_{SD} (∗)	Forward On Voltage	I_{SD} = 4.7 A V_{GS} = 0			1.6	V
t_{rr} Q_{rr} I_{RRM}	Reverse Recovery Time Reverse Recovery Charge Reverse Recovery Current	I_{SD} = 5 A di/dt = 100 A/µs V_{DD} = 100 V T_j = 150 °C (see test circuit, figure 5)		800 15.2 38		ns µC A

(∗) Pulsed: Pulse duration = 300 µs, duty cycle 1.5 %
(•) Pulse width limited by safe operating area

Safe Operating Areas For TO-220

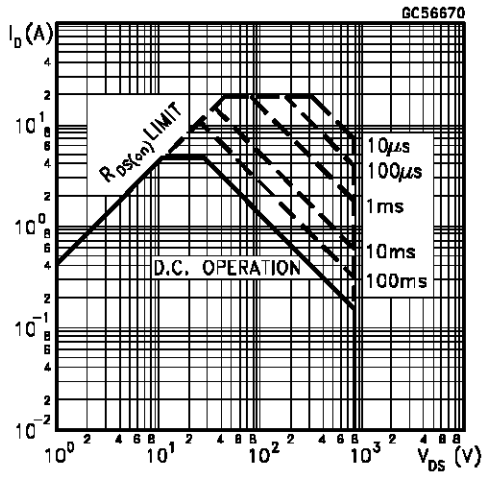

Safe Operating Areas For ISOWATT220

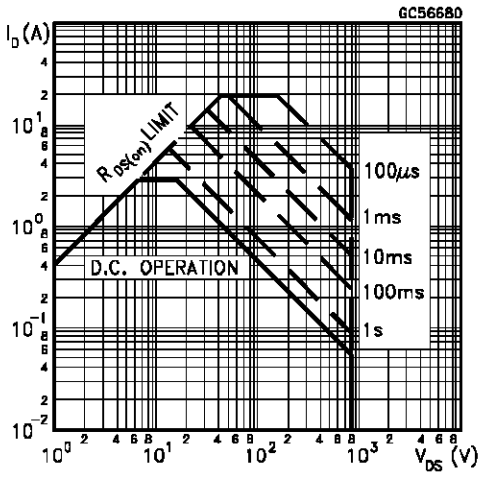

Thermal Impedeance For TO-220

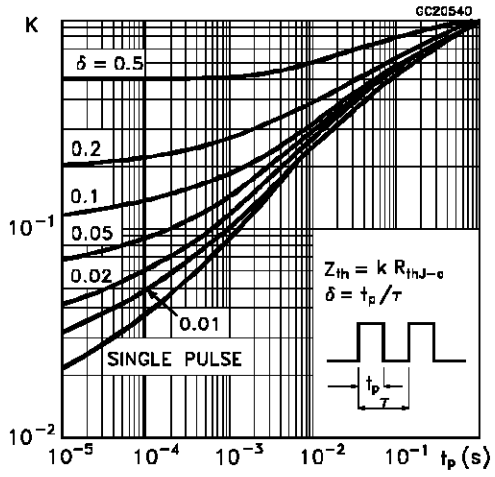

Thermal Impedance For ISOWATT220

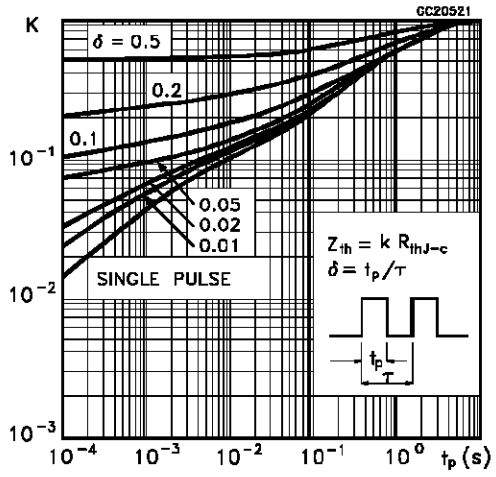

Derating Curve For TO-220

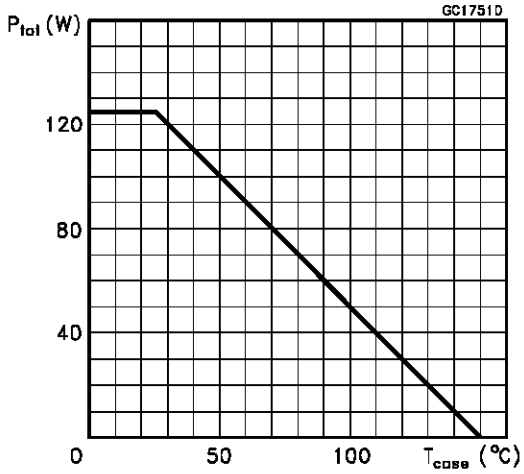

Derating Curve For ISOWATT220

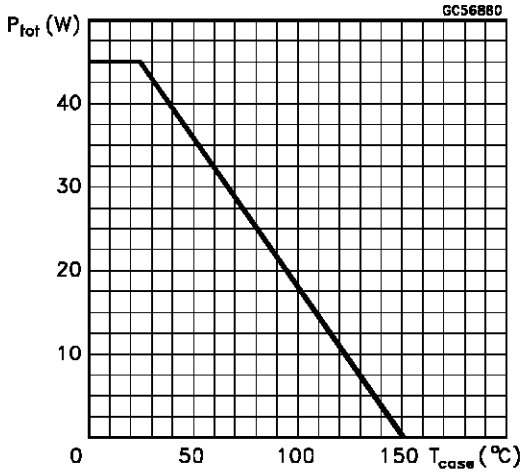

Output Characteristics

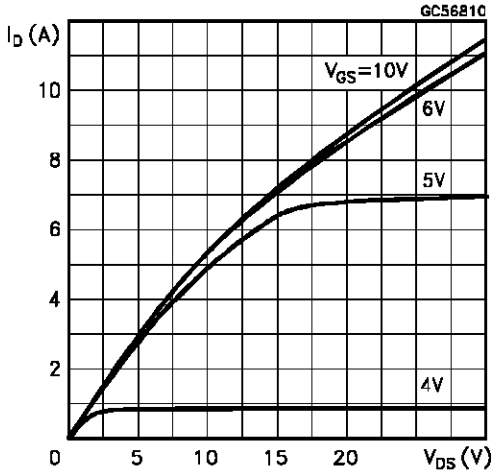

Transfer Characteristics

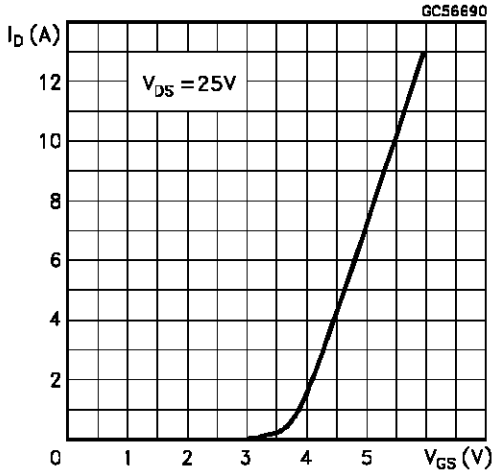

Transconductance

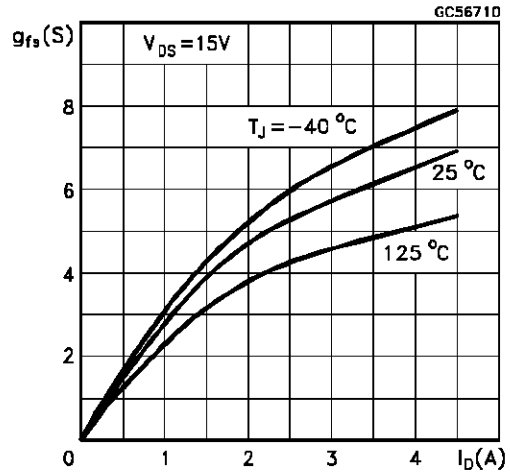

Static Drain-source On Resistance

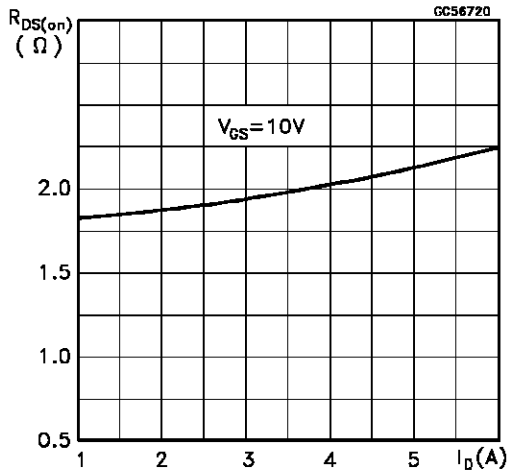

Gate Charge vs Gate-source Voltage

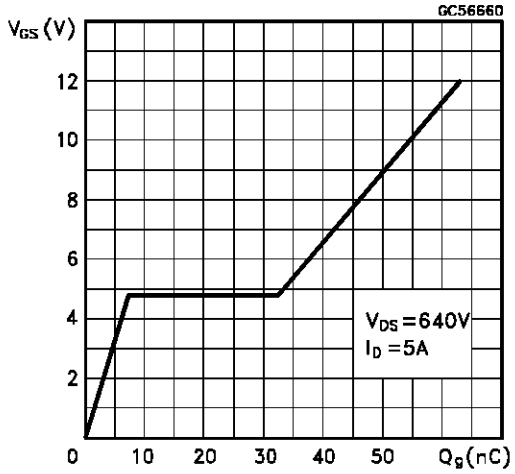

Capacitance Variations

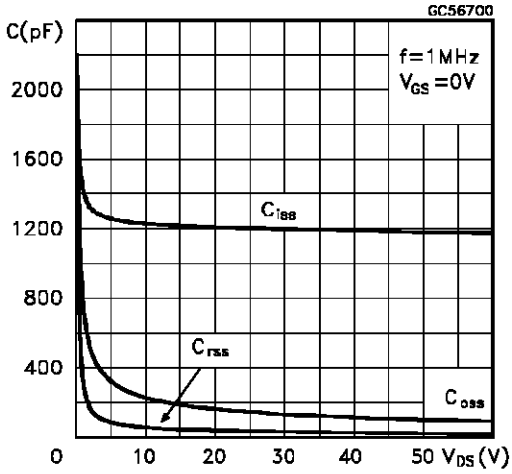

Normalized Gate Threshold Voltage vs Temperature

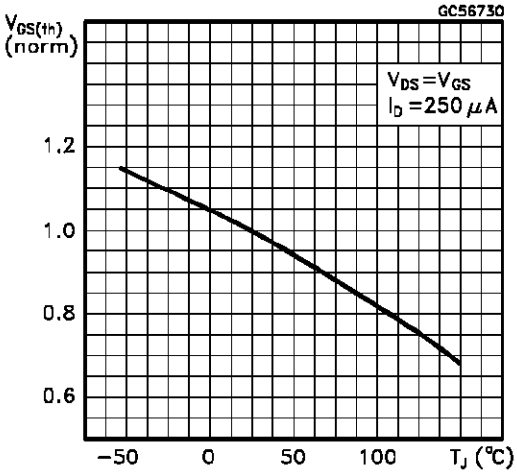

Normalized On Resistance vs Temperature

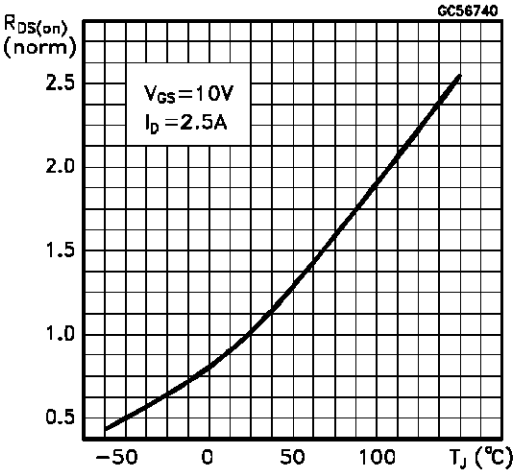

Turn-on Current Slope

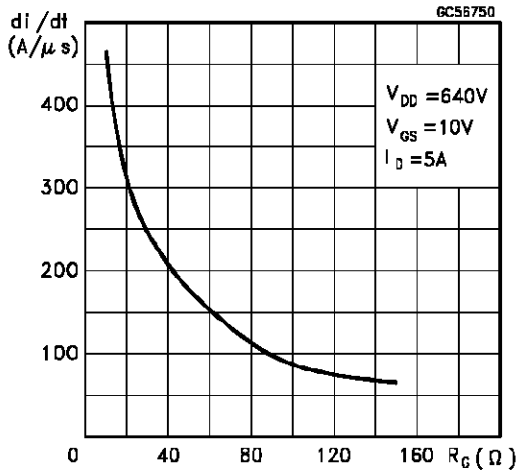

Turn-off Drain-source Voltage Slope

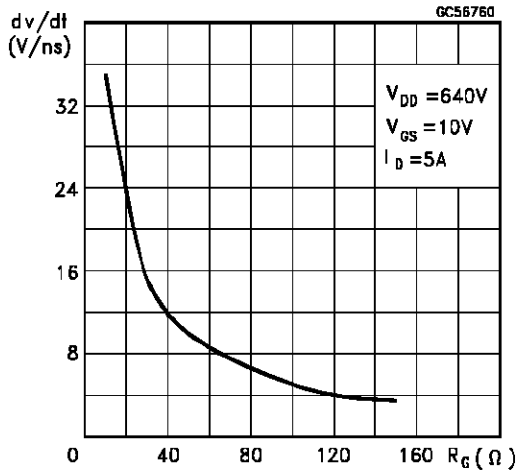

Cross-over Time

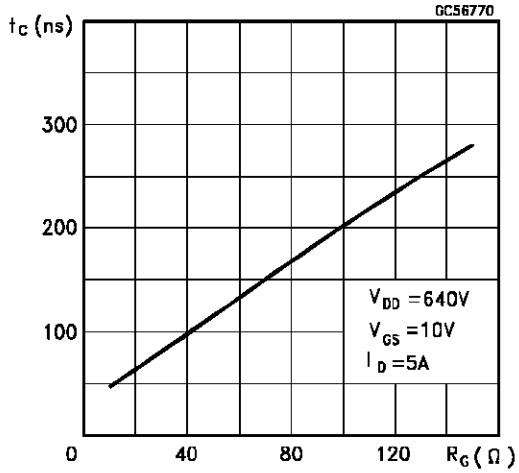

Switching Safe Operating Area

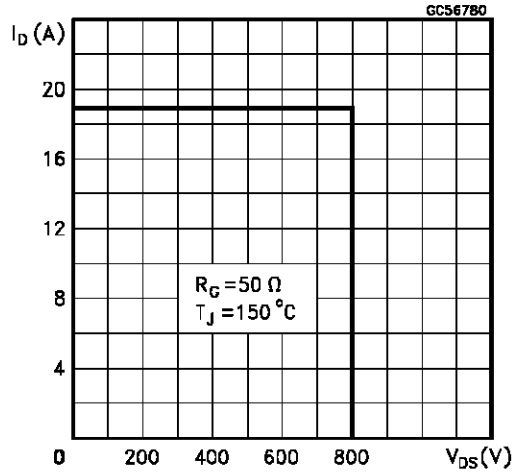

Accidental Overload Area

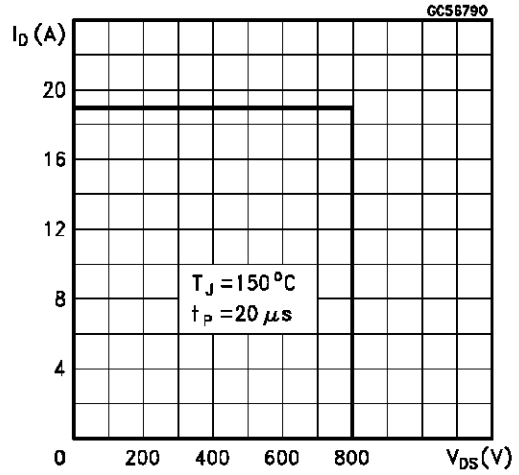

Source-drain Diode Forward Characteristics

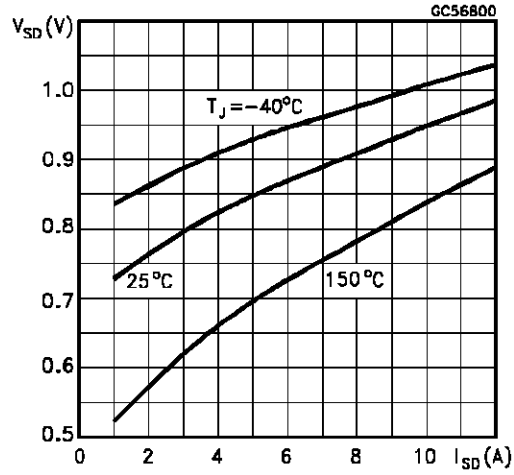

Fig. 1: Unclamped Inductive Load Test Circuits

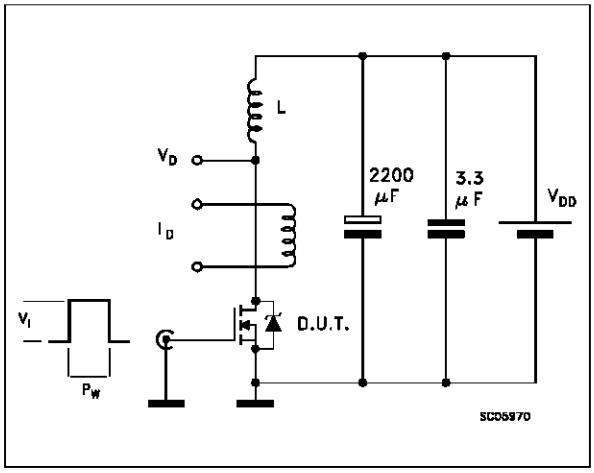

Fig. 2: Unclamped Inductive Waveforms

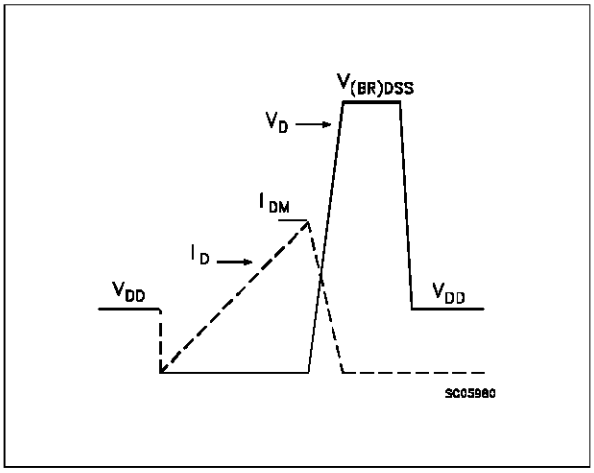

Fig. 3: Switching Times Test Circuits For Resistive Load

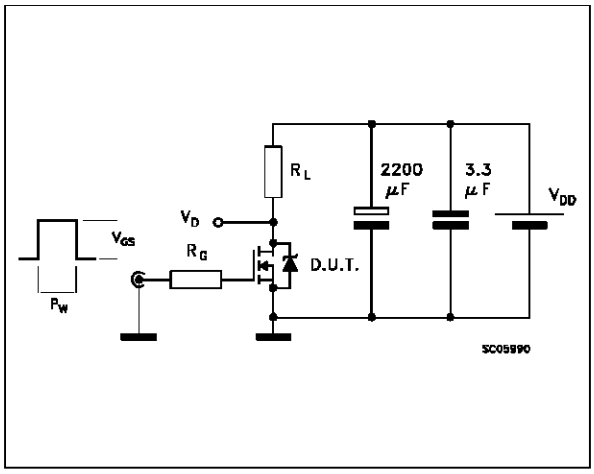

Fig. 4: Gate Charge Test Circuit

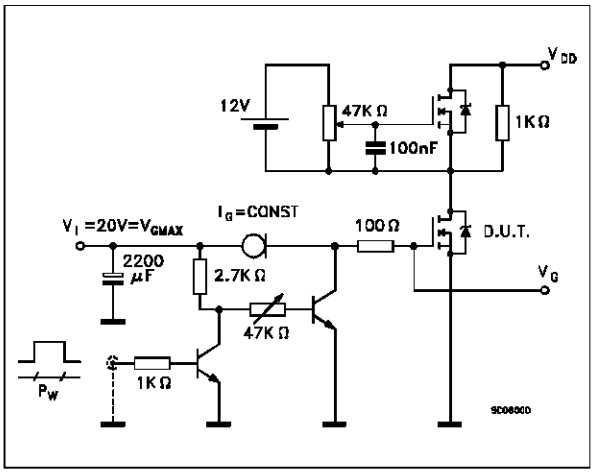

Fig. 5: Test Circuit For Inductive Load Switching And Diode Reverse Recovery Time

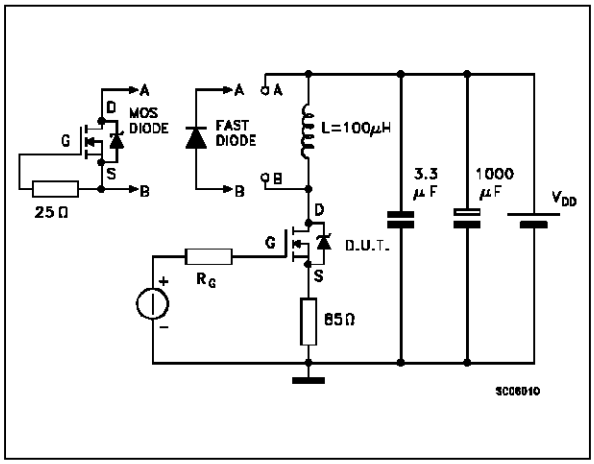

TO-220 MECHANICAL DATA

DIM.	mm			inch		
	MIN.	TYP.	MAX.	MIN.	TYP.	MAX.
A	4.40		4.60	0.173		0.181
C	1.23		1.32	0.048		0.051
D	2.40		2.72	0.094		0.107
D1		1.27			0.050	
E	0.49		0.70	0.019		0.027
F	0.61		0.88	0.024		0.034
F1	1.14		1.70	0.044		0.067
F2	1.14		1.70	0.044		0.067
G	4.95		5.15	0.194		0.203
G1	2.4		2.7	0.094		0.106
H2	10.0		10.40	0.393		0.409
L2		16.4			0.645	
L4	13.0		14.0	0.511		0.551
L5	2.65		2.95	0.104		0.116
L6	15.25		15.75	0.600		0.620
L7	6.2		6.6	0.244		0.260
L9	3.5		3.93	0.137		0.154
DIA.	3.75		3.85	0.147		0.151

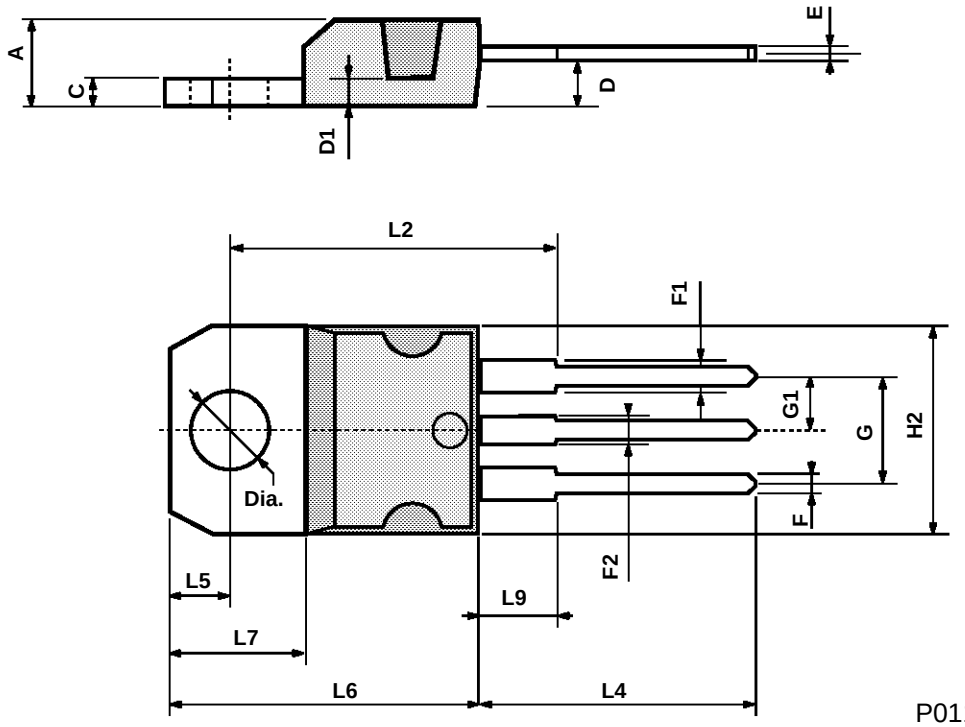

P011C

ISOWATT220 MECHANICAL DATA

DIM.	mm			inch		
	MIN.	TYP.	MAX.	MIN.	TYP.	MAX.
A	4.4		4.6	0.173		0.181
B	2.5		2.7	0.098		0.106
D	2.5		2.75	0.098		0.108
E	0.4		0.7	0.015		0.027
F	0.75		1	0.030		0.039
F1	1.15		1.7	0.045		0.067
F2	1.15		1.7	0.045		0.067
G	4.95		5.2	0.195		0.204
G1	2.4		2.7	0.094		0.106
H	10		10.4	0.393		0.409
L2		16			0.630	
L3	28.6		30.6	1.126		1.204
L4	9.8		10.6	0.385		0.417
L6	15.9		16.4	0.626		0.645
L7	9		9.3	0.354		0.366
Ø	3		3.2	0.118		0.126

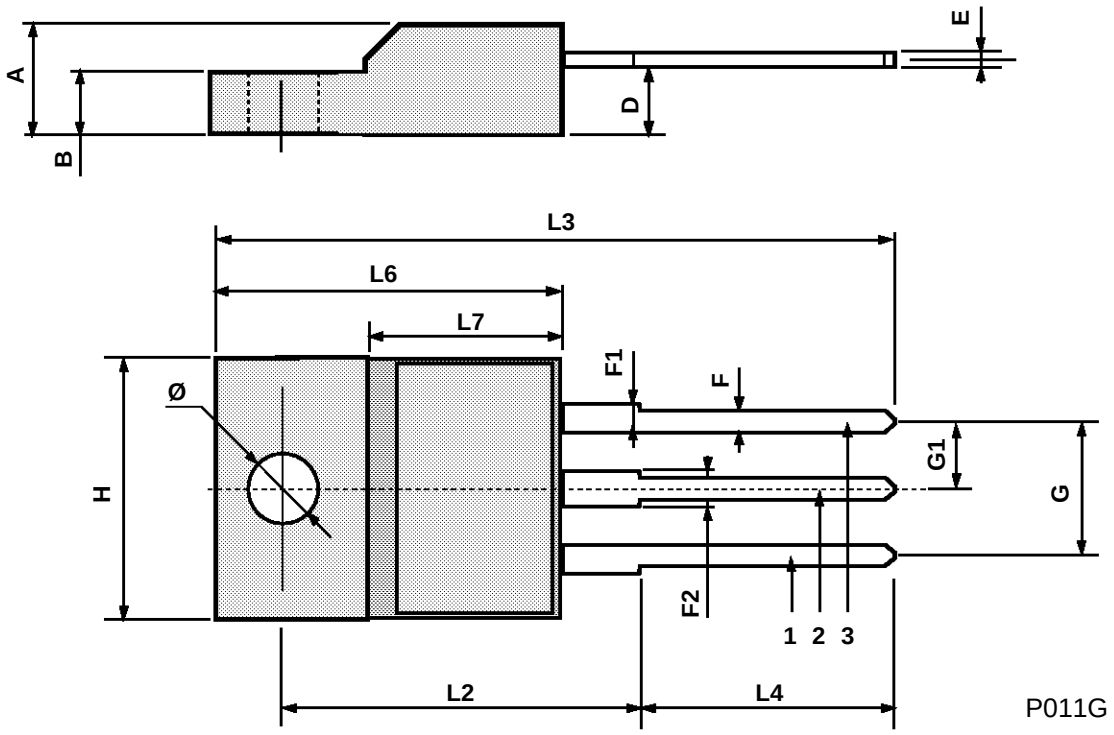

Information furnished is believed to be accurate and reliable. However, SGS-THOMSON Microelectronics assumes no responsability for the consequences of use of such information nor for any infringement of patents or other rights of third parties which may results from its use. No license is granted by implication or otherwise under any patent or patent rights of SGS-THOMSON Microelectronics. Specifications mentioned in this publication are subject to change without notice. This publication supersedes and replaces all information previously supplied.
SGS-THOMSON Microelectronics products are not authorized for use as critical components in life support devices or systems without express written approval of SGS-THOMSON Microelectonics.

© 1996 SGS-THOMSON Microelectronics - Printed in Italy - All Rights Reserved

SGS-THOMSON Microelectronics GROUP OF COMPANIES
Australia - Brazil - Canada - China - France - Germany - Hong Kong - Italy - Japan - Korea - Malaysia - Malta - Morocco - The Netherlands - Singapore - Spain - Sweden - Switzerland - Taiwan - Thailand - United Kingdom - U.S.A
.

WWW.ALLDATASHEET.COM

Copyright © Each Manufacturing Company.

All Datasheets cannot be modified without permission.

This datasheet has been download from :

www.AllDataSheet.com

100% Free DataSheet Search Site.

Free Download.

No Register.

Fast Search System.

www.AllDataSheet.com