查询PC80QL03N供应商

Nihon Inter Electronics Corporation

SBD MODULE 80A/30V

PC80QL03N

OUTLINE DRAWING

FEATURES

* Dual-Cathode Common to Base Plate
* Extremely Low Forward Voltage Drop
* Low Power Loss, High Efficiency
* High Surge Capability
* UL Recognized, File No. E187184

TYPICAL APPLICATIONS

* High Frequency Rectification

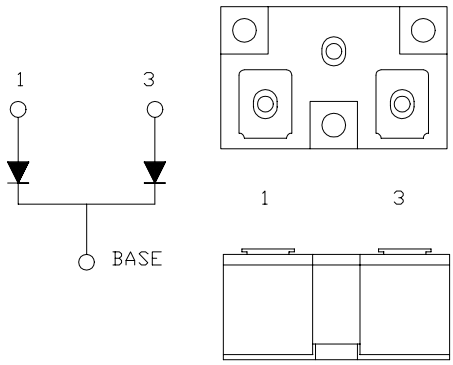

Maximum Ratings

Approx Net Weight:65g

Voltage Rating	Symbol	PC80QL03N		Unit
Repetitive Peak Reverse Voltage	V_{RRM}	30		V
Repetitive Peak Surge Reverse Voltage	V_{RRSM}	35 (Pulse Width ≤ 1 μsec, Duty ≤1/50)		V
Electrical Rating		**Condition**	**Rating**	
Average Rectified Output Current	I_O	50Hz Half Sine Wave per Arm, Tc=99℃	80	A
RMS Forward Current	$I_{F(RMS)}$	Per Arm	125	A
Surge Forward Current	I_{FSM}	50 Hz Half Sine Wave,1cycle Non-repetitive, per Arm	1600	A
Operating JunctionTemperature Range	Tjw		-40 to +125	℃
Storage Temperature Range	Tstg		-40 to +125	℃
Mounting torque	Ftor	Case mounting(recommended)	1.45	N•m
		Terminal Screw(recommended)	1.45	

Electrical • Thermal Characteristics

Characteristics	Symbol	Test Conditions	Max.	Unit
Peak Forward Voltage	V_{FM}	I_{FM}= 80A, Tj=25℃, per Arm	0.46	V
Peak Reverse Current	I_{RM}	V_{RM}= V_{RRM}, Tj= 25℃, per Arm	160	mA
Thermal Resistance	Rth(j-c)	Junction to Case, per Arm	0.46	℃/W
	Rth(c-f)	Base Plate to Heat Sink with Thermal Compound	0.12	

We recommend the use of the electrical conductive grease.

In case of parallel use, consider in balance of the current of each arms.

PC80QL03N OUTLINE DRAWING (Dimensions in mm)

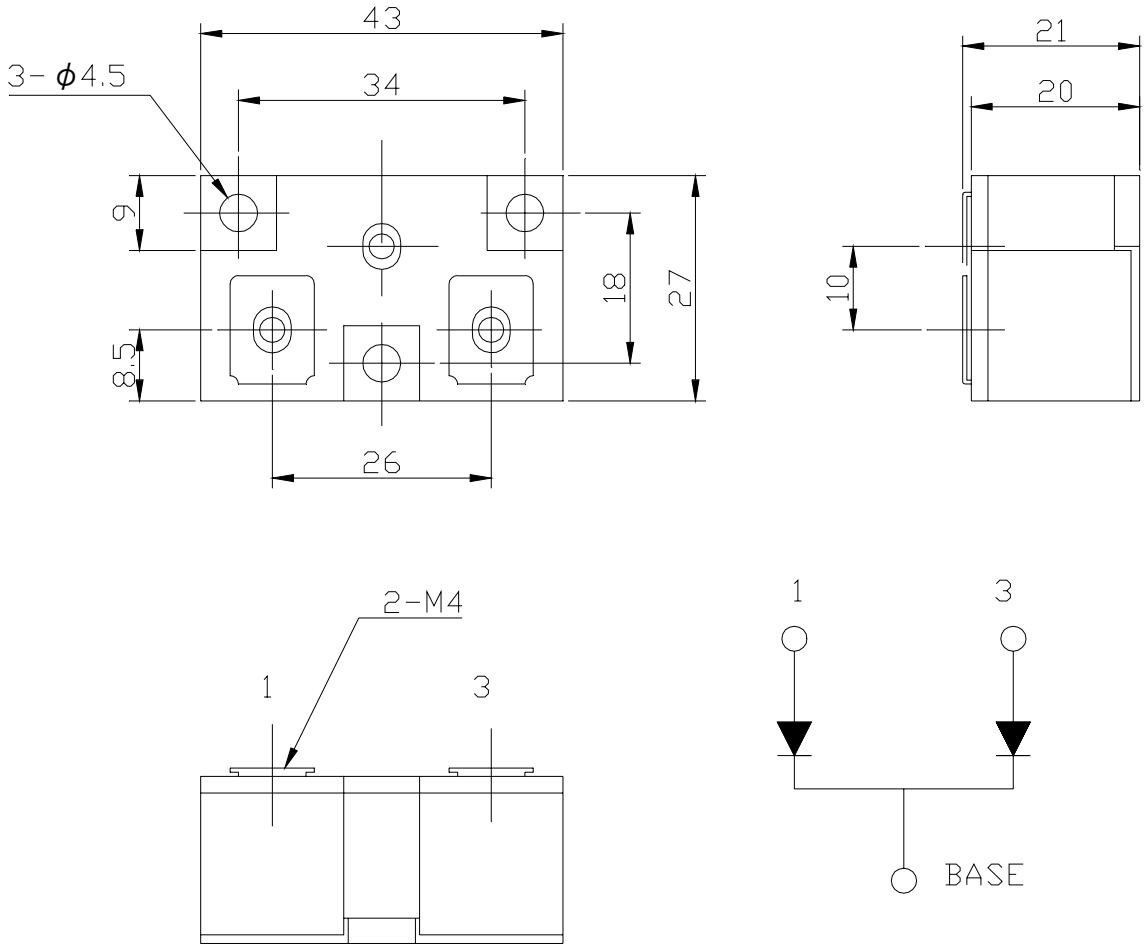

WWW.ALLDATASHEET.COM

Copyright © Each Manufacturing Company.

All Datasheets cannot be modified without permission.

This datasheet has been download from :

www.AllDataSheet.com

100% Free DataSheet Search Site.

Free Download.

No Register.

Fast Search System.

www.AllDataSheet.com