查询PFT2014N供应商

Nihon Inter Electronics Corporation

THYRISTOR MODULE

PFT2014N

200A / 400V

FEATURES

* 3 Phase Anode Common
  Half Bridge Circuit
* High Surge Capability
* UL Recognized, File No. E187184

TYPICAL APPLICATIONS

* Rectified For General Use

OUTLINE DRAWING

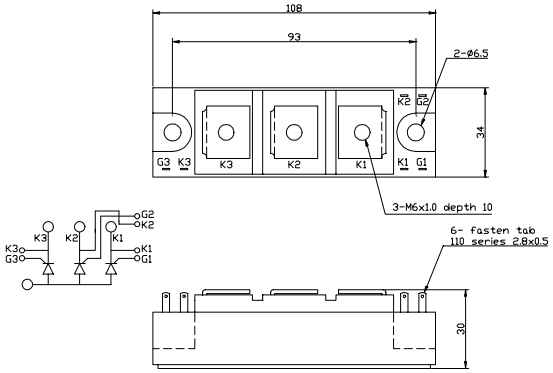

Maximum Ratings

Approx Net Weight:300g

Parameter	Symbol	Grade	Unit
		PFT2014N	
Repetitive Peak Off-State Voltage	V_{DRM}	400	V
Non Repetitive Peak Off-State Voltage	V_{DSM}	500	
Repetitive Peak Reverse Voltage	V_{RRM}	400	V
Non Repetitive Peak Reverse Voltage	V_{RSM}	500	

Parameter			Conditions		Max Rated Value	Unit
Average Rectified Output Current		$I_{O(AV)}$	50Hz Half Sine Wave condition Tc=116℃		200	A
RMS On-State Current		$I_{T(RMS)}$			314	A
Surge On-State Current		I_{TSM}	50 Hz Half Sine Wave,1Pulse, Non-Repetitive		5000	A
I Squared t		I^2t	2msec to 10msec		125000	A^2s
Peak Gate Power		P_{GM}			5	W
Average Gate Power		$P_{G(AV)}$			1	W
Peak Gate Current		I_{GM}			2	A
Peak Gate Voltage		V_{GM}			10	V
Peak Gate Reverse Voltage		V_{RGM}			5	V
Operating JunctionTemperature Range		Tjw			-40 to +150	℃
Storage Temperature Range		Tstg			-40 to +125	℃
Mounting torque	Case mounting	Ftor	Greased	M6 Screw	2.5 to 3.5	N•m
	Terminals		M6 Screw		2.5 to 3.5	

Value per 1 Arm

Electrical • Thermal Characteristics

Characteristics	Symbol	Test Conditions		Maximum Value.			Unit
				Min.	Typ.	Max.	
Peak Off-State Current	I_{DM}	V_{DM}= V_{DRM}, Tj= 150℃				50	mA
Peak Reverse Current	I_{RM}	V_{RM}= V_{RRM}, Tj= 150℃				50	mA
Peak Forward Voltage	V_{TM}	I_{TM}= 600A, Tj=25℃				1.19	V
Gate Current to Trigger	I_{GT}	V_D=6V,I_T=1A	Tj=-40℃			300	mA
			Tj=25℃			150	
			Tj=125℃			60	
Gate Voltage to Trigger	V_{GT}	V_D=6V,I_T=1A	Tj=-40℃			5.0	V
			Tj=25℃			3.0	
			Tj=125℃			1.5	
Gate Non-Trigger Voltage	V_{GD}	V_D=2/3V_{DRM} Tj=125℃		0.25			V
Latching Current	I_L	Tj=25℃			150		mA
Holding Current	I_H	Tj=25℃			100		mA
Thermal Resistance *1	Rth(j-c)	Junction to Case				0.05	℃/W

Value Per 1Arm

*1:Value Per Module

Nihon Inter Electronics Corporation

PFT2014N OUTLINE DRAWING (Dimensions in mm)

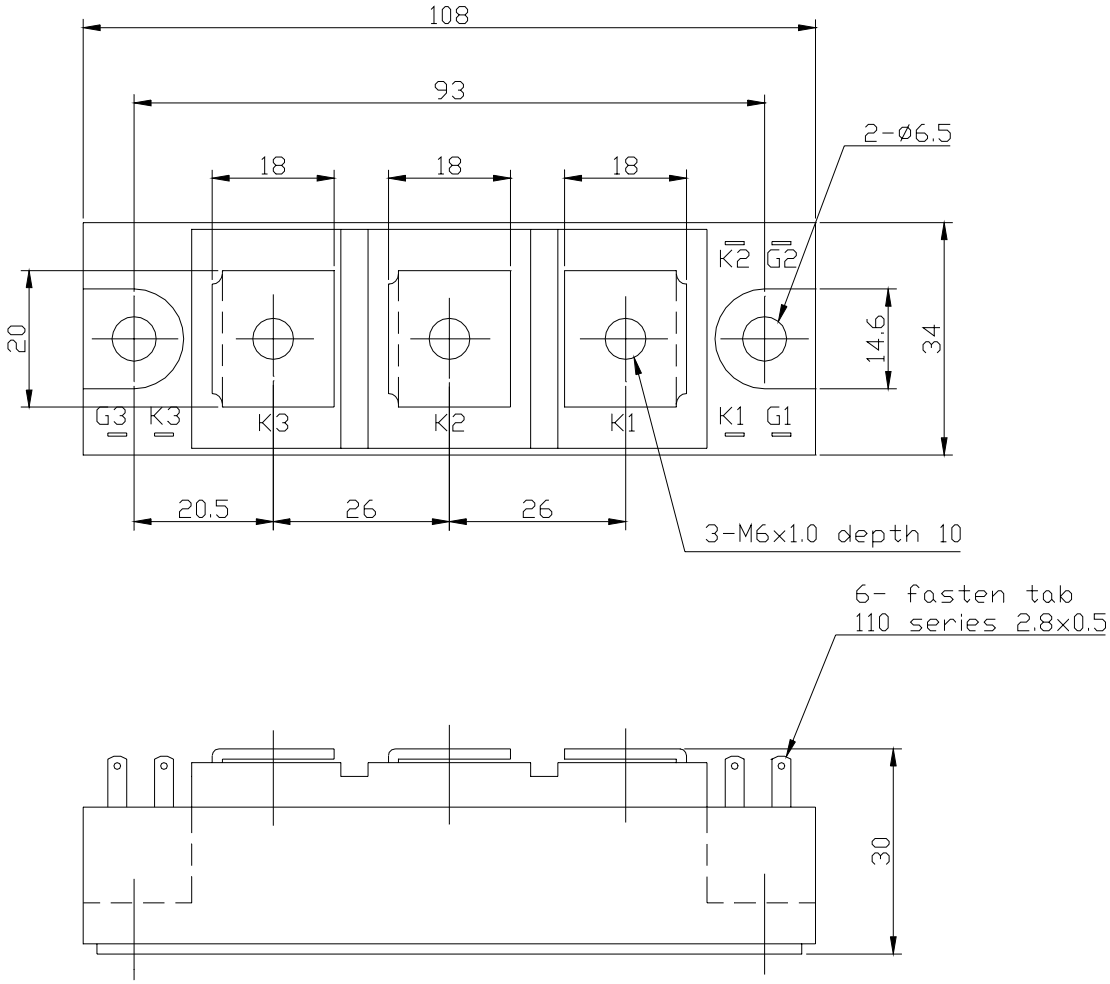

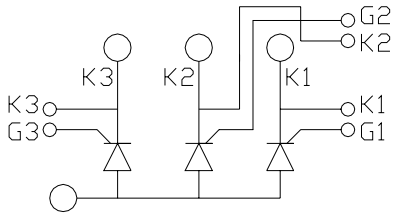

オン電圧特性
ON-STATE CURRENT VS. VOLTAGE

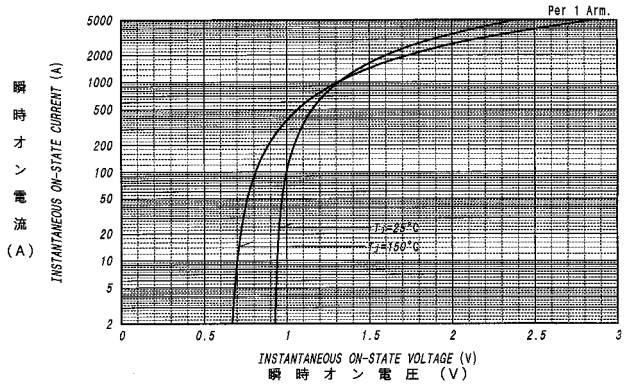

平均オン電力損失特性
AVERAGE ON-STATE POWER DISSIPATION

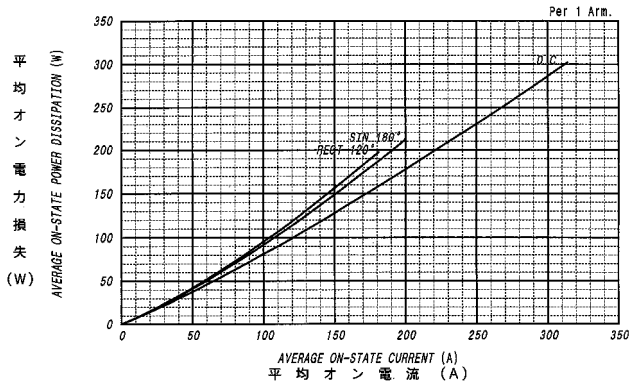

平均オン電流ーケース温度定格
AVERAGE ON-STATE CURRENT VS. CASE TEMPERATURE

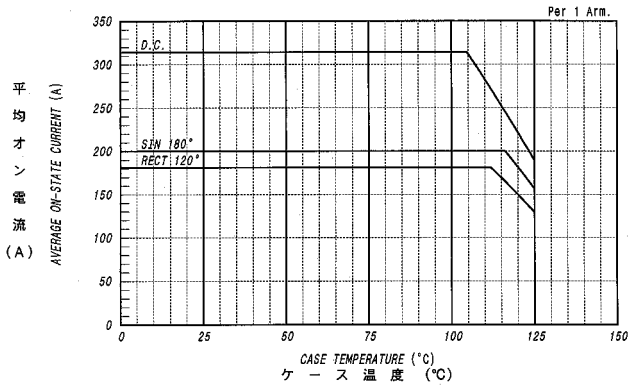

サージオン電流定格
SURGE CURRENT RATINGS

f=50Hz,Half Sine Wave,Non-Repetitive,Tj=150°C

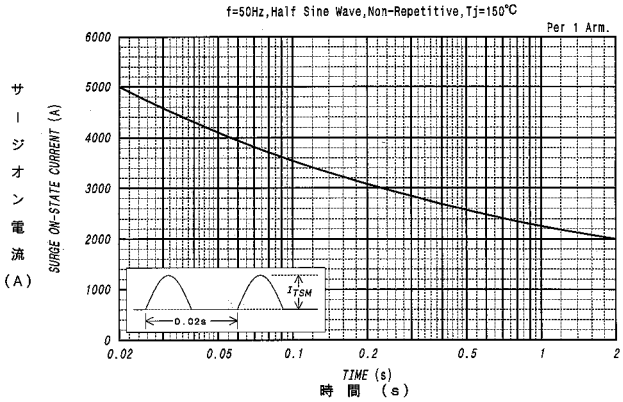

ゲート特性
GATE CHARACTERISTCS

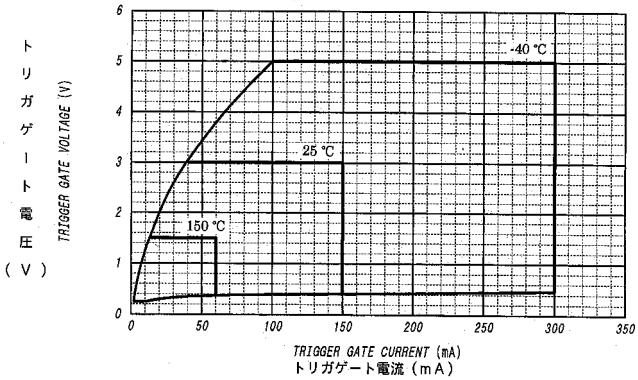

ゲート定格
GATE RATINGS

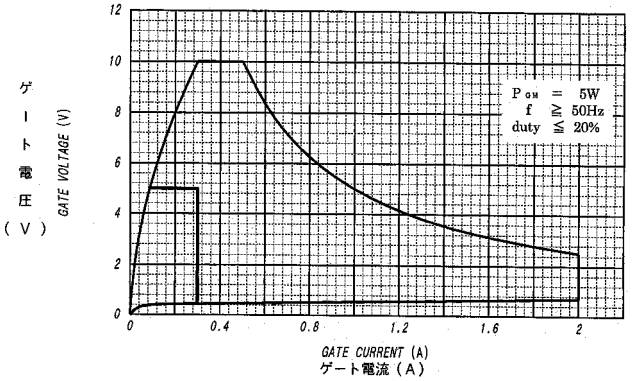

過渡熱抵抗特性
MAXIMUM TRANSIENT THERMAL IMPEDANCE
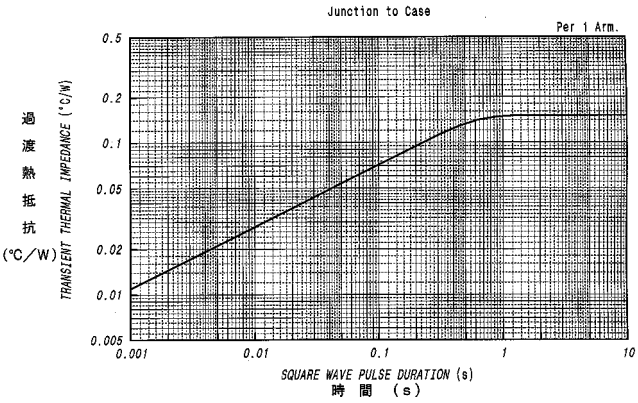
Junction to Case