查询PFT814N供应商

Nihon Inter Electronics Corporation

# THYRISTOR MODULE

# P F T 8 1 4 N

**80A / 400V**

## FEATURES

* 3 Phase Anode Common
  Half Bridge Circuit
* High Surge Capability
* UL Recognized, File No. E187184

## TYPICAL APPLICATIONS

* Rectified For General Use

OUTLINE DRAWING

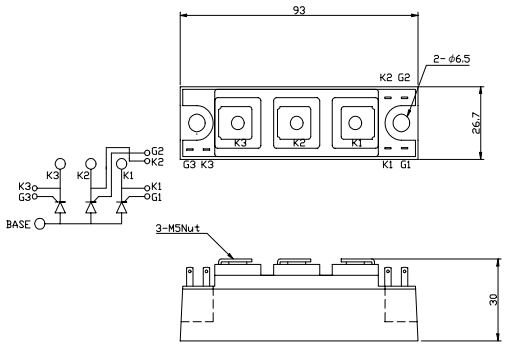


## Maximum Ratings

Approx Net Weight:150g

| Parameter | Symbol | Grade | Unit |
|---|---|---|---|
| | | PFT814N | |
| Repetitive Peak Off-State Voltage | $V_{DRM}$ | 400 | V |
| Non Repetitive Peak Off-State Voltage | $V_{DSM}$ | 500 | |
| Repetitive Peak Reverse Voltage | $V_{RRM}$ | 400 | V |
| Non Repetitive Peak Reverse Voltage | $V_{RSM}$ | 500 | |

| Parameter | | | Conditions | | Max Rated Value | Unit |
|---|---|---|---|---|---|---|
| Average Rectified Output Current | | $I_{O(AV)}$ | 50Hz Half Sine Wave condition Tc=121℃ | | 80 | A |
| RMS On-State Current | | $I_{T(RMS)}$ | | | 125 | A |
| Surge On-State Current | | $I_{TSM}$ | 50 Hz Half Sine Wave,1Pulse, Non-Repetitive | | 2300 | A |
| I Squared t | | $I^2t$ | 2msec to 10msec | | 26400 | $A^2s$ |
| Peak Gate Power | | $P_{GM}$ | | | 5 | W |
| Average Gate Power | | $P_{G(AV)}$ | | | 1 | W |
| Peak Gate Current | | $I_{GM}$ | | | 2 | A |
| Peak Gate Voltage | | $V_{GM}$ | | | 10 | V |
| Peak Gate Reverse Voltage | | $V_{RGM}$ | | | 5 | V |
| Operating JunctionTemperature Range | | Tjw | | | -40 to +150 | ℃ |
| Storage Temperature Range | | Tstg | | | -40 to +125 | ℃ |
| Mounting torque | Case mounting | Ftor | Greased | M6 Screw | 2.4 to 3.5 | N•m |
| | Terminals | | M5 Screw | | 2.4 to 2.8 | |

Value per 1 Arm

## Electrical • Thermal Characteristics

| Characteristics | Symbol | Test Conditions | | Maximum Value. | | | Unit |
|---|---|---|---|---|---|---|---|
| | | | | Min. | Typ. | Max. | |
| Peak Off-State Current | $I_{DM}$ | $V_{DM}$= $V_{DRM}$, Tj= 150℃ | | | | 20 | mA |
| Peak Reverse Current | $I_{RM}$ | $V_{RM}$= $V_{RRM}$, Tj= 150℃ | | | | 20 | mA |
| Peak Forward Voltage | $V_{TM}$ | $I_{TM}$= 240A, Tj=25℃ | | | | 1.20 | V |
| Gate Current to Trigger | $I_{GT}$ | $V_D$=6V,$I_T$=1A | Tj=-40℃ | | | 200 | mA |
| | | | Tj=25℃ | | | 100 | |
| | | | Tj=125℃ | | | 50 | |
| Gate Voltage to Trigger | $V_{GT}$ | $V_D$=6V,$I_T$=1A | Tj=-40℃ | | | 4 | V |
| | | | Tj=25℃ | | | 2.5 | |
| | | | Tj=125℃ | | | 1.5 | |
| Gate Non-Trigger Voltage | $V_{GD}$ | $V_D$=2/3$V_{DRM}$ Tj=125℃ | | 0.2 | | | V |
| Latching Current | $I_L$ | Tj=25℃ | | | 100 | | mA |
| Holding Current | $I_H$ | Tj=25℃ | | | 50 | | mA |
| Thermal Resistance *1 | Rth(j-c) | Junction to Case | | | | 0.1 | ℃/W |

Value Per 1Arm

*1:Value Per Module

PFT814N OUTLINE DRAWING (Dimensions in mm)

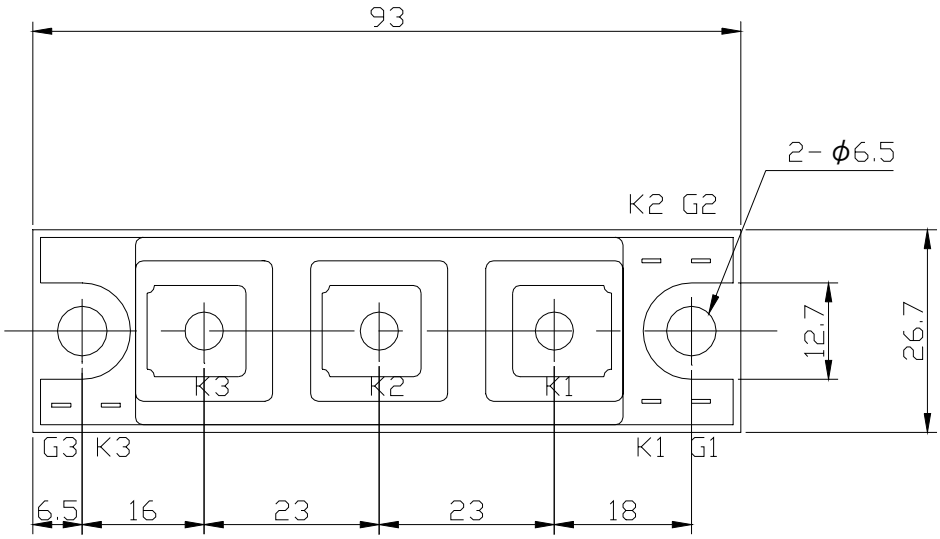


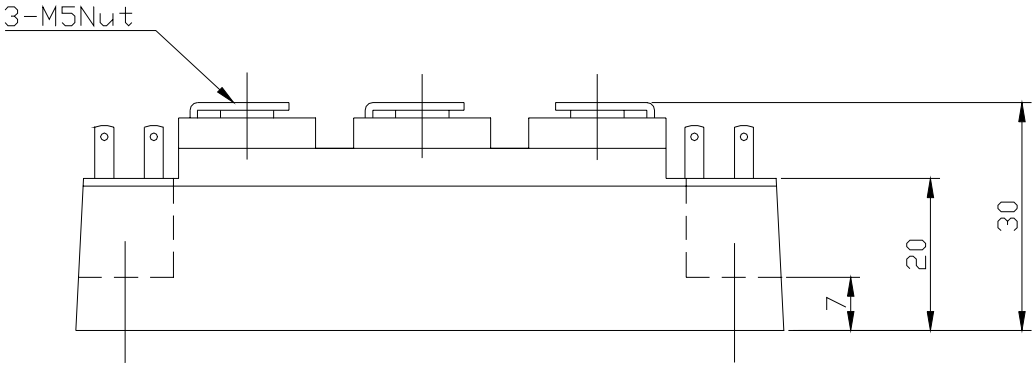


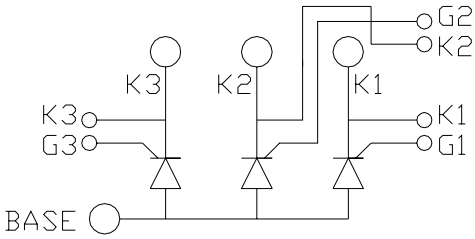

## オン電圧特性
ON-STATE CURRENT VS. VOLTAGE

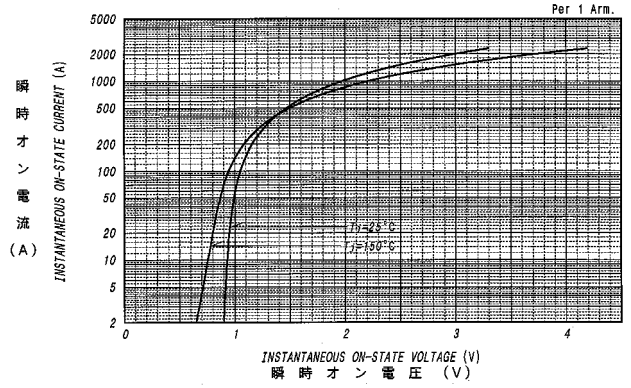


## 平均オン電力損失特性
AVERAGE ON-STATE POWER DISSIPATION

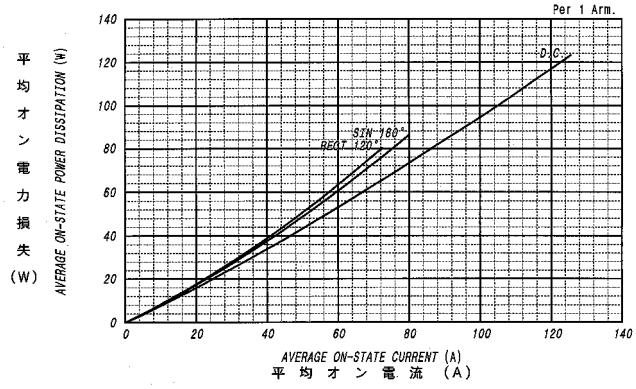


## 平均オン電流－ケース温度定格
AVERAGE ON-STATE CURRENT VS. CASE TEMPERATURE

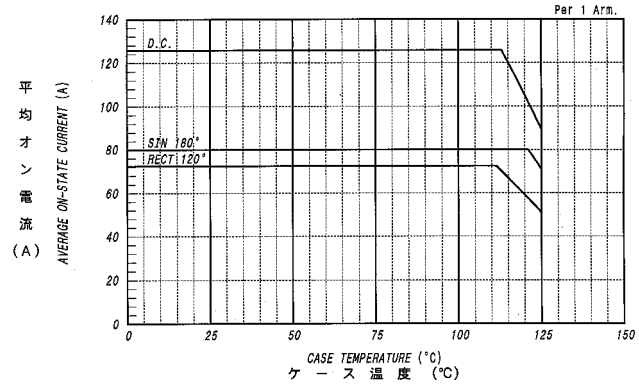


## サージオン電流定格
SURGE CURRENT RATINGS

f=50Hz, Half Sine Wave, Non-Repetitive, Tj=150°C

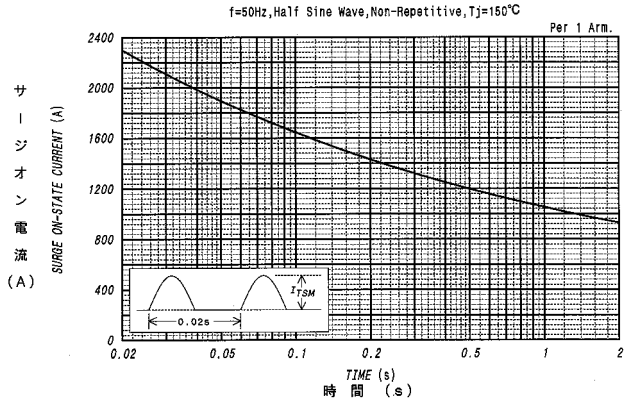


## ゲート特性
GATE CHARACTERISTICS

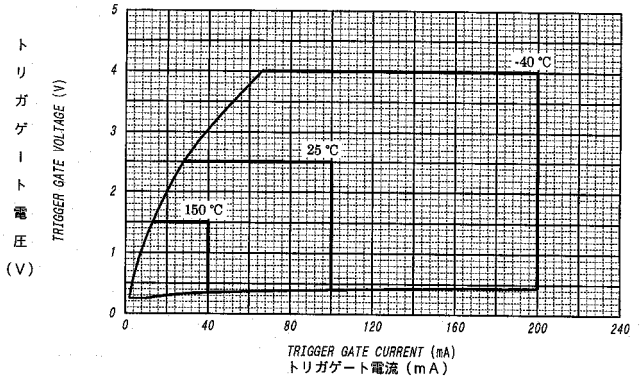


## ゲート定格
GATE RATINGS

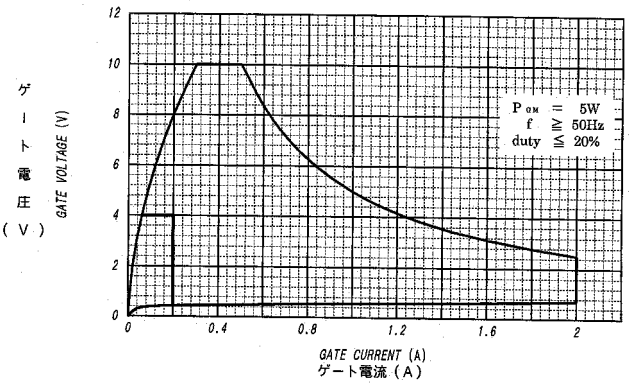


## 過渡熱抵抗特性
MAXIMUM TRANSIENT THERMAL IMPEDANCE
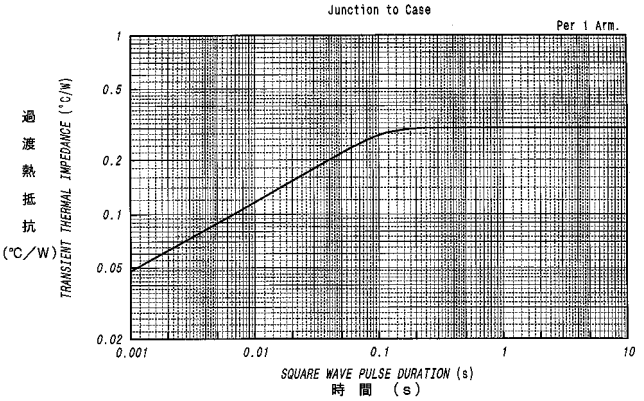
Junction to Case