查询PRF949供应商 捷多邦，专业PCB打样工厂，24小时加急出货

DISCRETE SEMICONDUCTORS

DATA SHEET

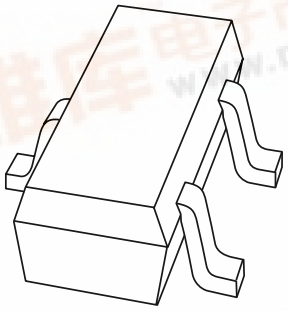

PRF949
UHF wideband transistor

Preliminary specification 1999 Oct 29

Philips Semiconductors

找PDF 维库一下 pdf.dzsc.com

PHILIPS

UHF wideband transistor PRF949

FEATURES

- Small size
- Low noise
- Low distortion
- High gain
- Gold metallization ensures excellent reliability.

APPLICATIONS

- Communication and instrumentation systems.

DESCRIPTION

Silicon NPN transistor in a surface mount 3-pin SOT416 (SC75) package. The transistor is primarily intended for wideband applications in the GHz-range in the RF front end of analog and digital cellular telephones, cordless phones, radar detectors, pagers and satellite TV-tuners.

PINNING SOT416 (SC75)

PIN	DESCRIPTION
1	base
2	emitter
3	collector

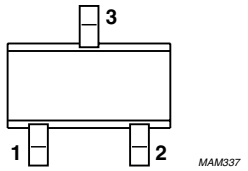

Marking code: V0

Fig.1 Simplified outline (SOT416).

QUICK REFERENCE DATA

SYMBOL	PARAMETER	CONDITIONS	MIN.	TYP.	MAX.	UNIT
C_{re}	feedback capacitance	$I_C = 0$; $V_{CB} = 6$ V; f = 1 MHz	–	0.3	tbf	pF
f_T	transition frequency	$I_C = 15$ mA; $V_{CE} = 6$ V; $f_m = 1$ GHz	7	9	–	GHz
G_{UM}	maximum unilateral power gain	$I_C = 15$ mA; $V_{CE} = 6$ V; $T_{amb} = 25$ °C; f = 1 GHz	–	16	–	dB
NF	noise figure	$\Gamma_S = \Gamma_{opt}$; $I_C = 5$ mA; $V_{CE} = 6$ V; f = 1 GHz	–	1.5	2.5	dB
P_{tot}	total power dissipation	$T_s = 90$ °C; note 1	–	–	180	mW
$R_{th\ j\text{-}s}$	thermal resistance from junction to soldering point	$P_{tot} = 180$ mW	–	–	335	K/W

Note

1. T_s is the temperature at the soldering point of the collector pin.

LIMITING VALUES

In accordance with the Absolute Maximum Rating System (IEC 134).

SYMBOL	PARAMETER	CONDITIONS	MIN.	MAX.	UNIT
V_{CBO}	collector-base voltage	open emitter	–	20	V
V_{CEO}	collector-emitter voltage	open base	–	10	V
V_{EBO}	emitter-base voltage	open collector	–	1.5	V
I_C	DC collector current		–	50	mA
$I_{C(AV)}$	average collector current		–	50	mA
P_{tot}	total power dissipation	T_s = 60 °C; note 1	–	250	mW
T_{stg}	storage temperature		–65	+150	°C
T_j	junction temperature		–	175	°C

Note

1. T_s is the temperature at the soldering point of the collector pin.

THERMAL CHARACTERISTICS

SYMBOL	PARAMETER	CONDITIONS	VALUE	UNIT
$R_{th\ j\text{-}s}$	thermal resistance from junction to soldering point	P_{tot} = 180 mW; T_s = 90 °C; note 1	335	K/W

Note

1. T_s is the temperature at the soldering point of the collector pin.

CHARACTERISTICS

T_j = 25 °C unless otherwise specified.

SYMBOL	PARAMETER	CONDITIONS	MIN.	TYP.	MAX.	UNIT
DC characteristics						
$V_{(BR)CBO}$	collector-base breakdown voltage	I_C = 100 μA; I_E = 0	20	–	–	V
$V_{(BR)CEO}$	collector-emitter breakdown voltage	I_C = 100 μA; I_B = 0	10	–	–	V
$V_{(BR)EBO}$	emitter-base breakdown voltage	I_E = 10 μA; I_C = 0	1.5	–	–	V
V_{BEF}	forward base-emitter voltage	I_E = 25 mA	–	–	1.05	V
I_{CBO}	collector-base leakage current	V_{CB} = 10 V; I_E = 0	–	–	100	nA
I_{EBO}	emitter-base leakage current	V_{EB} = 1 V; I_C = 0	–	–	100	nA
h_{FE}	DC current gain	I_C = 5 mA; V_{CE} = 6 V	100	150	200	
		I_C = 15 mA; V_{CE} = 6 V	–	150	–	
AC characteristics						
C_{re}	feedback capacitance	I_C = 0; V_{CB} = 6 V; f = 1 MHz	–	0.3	tbf	pF
f_T	transition frequency	I_C = 15 mA; V_{CE} = 6 V; f_m = 1 GHz	7	9	–	GHz
$\|s_{21}\|^2$	insertion gain	I_C = 15 mA; V_{CE} = 6 V; f = 1 GHz	13	15	–	dB
G_{UM}	maximum unilateral power gain; note 1	I_C = 15 mA; V_{CE} = 6 V; T_{amb} = 25 °C; f = 1 GHz	–	16	–	dB
		I_C = 15 mA; V_{CE} = 6 V; T_{amb} = 25 °C; f = 2 GHz	–	10	–	dB
NF	noise figure	$\Gamma_S = \Gamma_{opt}$; I_C = 5 mA; V_{CE} = 6 V; f = 1 GHz	–	1.5	2.5	dB
		$\Gamma_S = \Gamma_{opt}$; I_C = 5 mA; V_{CE} = 6 V; f = 2 GHz	–	2.1	–	dB

Note

1. G_{UM} is the maximum unilateral power gain, assuming s_{12} is zero. $G_{UM} = 10 \log \frac{|s_{21}|^2}{(1-|s_{11}|^2)(1-|s_{22}|^2)}$ dB

PACKAGE OUTLINE

Plastic surface mounted package; 3 leads **SOT416**

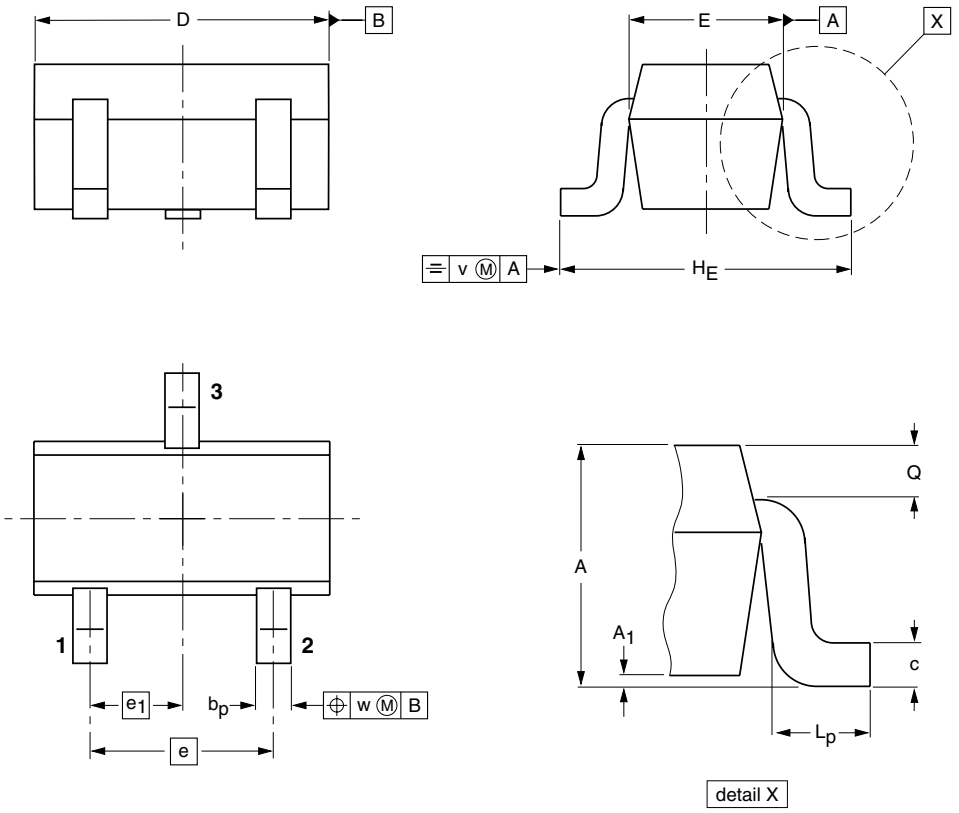

DIMENSIONS (mm are the original dimensions)

UNIT	A	A_1 max	b_p	c	D	E	e	e_1	H_E	L_p	Q	v	w
mm	0.95 0.60	0.1	0.30 0.15	0.25 0.10	1.8 1.4	0.9 0.7	1	0.5	1.75 1.45	0.45 0.15	0.23 0.13	0.2	0.2

OUTLINE VERSION	REFERENCES				EUROPEAN PROJECTION	ISSUE DATE
	IEC	JEDEC	EIAJ			
SOT416			SC-75			97-02-28

DEFINITIONS

Data sheet status	
Objective specification	This data sheet contains target or goal specifications for product development.
Preliminary specification	This data sheet contains preliminary data; supplementary data may be published later.
Product specification	This data sheet contains final product specifications.
Limiting values	
Limiting values given are in accordance with the Absolute Maximum Rating System (IEC 134). Stress above one or more of the limiting values may cause permanent damage to the device. These are stress ratings only and operation of the device at these or at any other conditions above those given in the Characteristics sections of the specification is not implied. Exposure to limiting values for extended periods may affect device reliability.	
Application information	
Where application information is given, it is advisory and does not form part of the specification.	

LIFE SUPPORT APPLICATIONS

These products are not designed for use in life support appliances, devices, or systems where malfunction of these products can reasonably be expected to result in personal injury. Philips customers using or selling these products for use in such applications do so at their own risk and agree to fully indemnify Philips for any damages resulting from such improper use or sale.

Philips Semiconductors – a worldwide company

Argentina: see South America

Australia: 3 Figtree Drive, HOMEBUSH, NSW 2140,
Tel. +61 2 9704 8141, Fax. +61 2 9704 8139

Austria: Computerstr. 6, A-1101 WIEN, P.O. Box 213,
Tel. +43 1 60 101 1248, Fax. +43 1 60 101 1210

Belarus: Hotel Minsk Business Center, Bld. 3, r. 1211, Volodarski Str. 6,
220050 MINSK, Tel. +375 172 20 0733, Fax. +375 172 20 0773

Belgium: see The Netherlands

Brazil: see South America

Bulgaria: Philips Bulgaria Ltd., Energoproject, 15th floor,
51 James Bourchier Blvd., 1407 SOFIA,
Tel. +359 2 68 9211, Fax. +359 2 68 9102

Canada: PHILIPS SEMICONDUCTORS/COMPONENTS,
Tel. +1 800 234 7381, Fax. +1 800 943 0087

China/Hong Kong: 501 Hong Kong Industrial Technology Centre,
72 Tat Chee Avenue, Kowloon Tong, HONG KONG,
Tel. +852 2319 7888, Fax. +852 2319 7700

Colombia: see South America

Czech Republic: see Austria

Denmark: Sydhavnsgade 23, 1780 COPENHAGEN V,
Tel. +45 33 29 3333, Fax. +45 33 29 3905

Finland: Sinikalliontie 3, FIN-02630 ESPOO,
Tel. +358 9 615 800, Fax. +358 9 6158 0920

France: 51 Rue Carnot, BP317, 92156 SURESNES Cedex,
Tel. +33 1 4099 6161, Fax. +33 1 4099 6427

Germany: Hammerbrookstraße 69, D-20097 HAMBURG,
Tel. +49 40 2353 60, Fax. +49 40 2353 6300

Hungary: see Austria

India: Philips INDIA Ltd, Band Box Building, 2nd floor,
254-D, Dr. Annie Besant Road, Worli, MUMBAI 400 025,
Tel. +91 22 493 8541, Fax. +91 22 493 0966

Indonesia: PT Philips Development Corporation, Semiconductors Division,
Gedung Philips, Jl. Buncit Raya Kav.99-100, JAKARTA 12510,
Tel. +62 21 794 0040 ext. 2501, Fax. +62 21 794 0080

Ireland: Newstead, Clonskeagh, DUBLIN 14,
Tel. +353 1 7640 000, Fax. +353 1 7640 200

Israel: RAPAC Electronics, 7 Kehilat Saloniki St, PO Box 18053,
TEL AVIV 61180, Tel. +972 3 645 0444, Fax. +972 3 649 1007

Italy: PHILIPS SEMICONDUCTORS, Via Casati, 23 - 20052 MONZA (MI),
Tel. +39 039 203 6838, Fax +39 039 203 6800

Japan: Philips Bldg 13-37, Kohnan 2-chome, Minato-ku,
TOKYO 108-8507, Tel. +81 3 3740 5130, Fax. +81 3 3740 5057

Korea: Philips House, 260-199 Itaewon-dong, Yongsan-ku, SEOUL,
Tel. +82 2 709 1412, Fax. +82 2 709 1415

Malaysia: No. 76 Jalan Universiti, 46200 PETALING JAYA, SELANGOR,
Tel. +60 3 750 5214, Fax. +60 3 757 4880

Mexico: 5900 Gateway East, Suite 200, EL PASO, TEXAS 79905,
Tel. +9-5 800 234 7381, Fax +9-5 800 943 0087

Middle East: see Italy

Netherlands: Postbus 90050, 5600 PB EINDHOVEN, Bldg. VB,
Tel. +31 40 27 82785, Fax. +31 40 27 88399

New Zealand: 2 Wagener Place, C.P.O. Box 1041, AUCKLAND,
Tel. +64 9 849 4160, Fax. +64 9 849 7811

Norway: Box 1, Manglerud 0612, OSLO,
Tel. +47 22 74 8000, Fax. +47 22 74 8341

Pakistan: see Singapore

Philippines: Philips Semiconductors Philippines Inc.,
106 Valero St. Salcedo Village, P.O. Box 2108 MCC, MAKATI,
Metro MANILA, Tel. +63 2 816 6380, Fax. +63 2 817 3474

Poland: Al.Jerozolimskie 195 B, 02-222 WARSAW,
Tel. +48 22 5710 000, Fax. +48 22 5710 001

Portugal: see Spain

Romania: see Italy

Russia: Philips Russia, Ul. Usatcheva 35A, 119048 MOSCOW,
Tel. +7 095 755 6918, Fax. +7 095 755 6919

Singapore: Lorong 1, Toa Payoh, SINGAPORE 319762,
Tel. +65 350 2538, Fax. +65 251 6500

Slovakia: see Austria

Slovenia: see Italy

South Africa: S.A. PHILIPS Pty Ltd., 195-215 Main Road Martindale,
2092 JOHANNESBURG, P.O. Box 58088 Newville 2114,
Tel. +27 11 471 5401, Fax. +27 11 471 5398

South America: Al. Vicente Pinzon, 173, 6th floor,
04547-130 SÃO PAULO, SP, Brazil,
Tel. +55 11 821 2333, Fax. +55 11 821 2382

Spain: Balmes 22, 08007 BARCELONA,
Tel. +34 93 301 6312, Fax. +34 93 301 4107

Sweden: Kottbygatan 7, Akalla, S-16485 STOCKHOLM,
Tel. +46 8 5985 2000, Fax. +46 8 5985 2745

Switzerland: Allmendstrasse 140, CH-8027 ZÜRICH,
Tel. +41 1 488 2741 Fax. +41 1 488 3263

Taiwan: Philips Semiconductors, 6F, No. 96, Chien Kuo N. Rd., Sec. 1,
TAIPEI, Taiwan Tel. +886 2 2134 2886, Fax. +886 2 2134 2874

Thailand: PHILIPS ELECTRONICS (THAILAND) Ltd.,
209/2 Sanpavuth-Bangna Road Prakanong, BANGKOK 10260,
Tel. +66 2 745 4090, Fax. +66 2 398 0793

Turkey: Yukari Dudullu, Org. San. Blg., 2.Cad. Nr. 28 81260 Umraniye,
ISTANBUL, Tel. +90 216 522 1500, Fax. +90 216 522 1813

Ukraine: PHILIPS UKRAINE, 4 Patrice Lumumba str., Building B, Floor 7,
252042 KIEV, Tel. +380 44 264 2776, Fax. +380 44 268 0461

United Kingdom: Philips Semiconductors Ltd., 276 Bath Road, Hayes,
MIDDLESEX UB3 5BX, Tel. +44 208 730 5000, Fax. +44 208 754 8421

United States: 811 East Arques Avenue, SUNNYVALE, CA 94088-3409,
Tel. +1 800 234 7381, Fax. +1 800 943 0087

Uruguay: see South America

Vietnam: see Singapore

Yugoslavia: PHILIPS, Trg N. Pasica 5/v, 11000 BEOGRAD,
Tel. +381 11 62 5344, Fax.+381 11 63 5777

For all other countries apply to: Philips Semiconductors,
International Marketing & Sales Communications, Building BE-p, P.O. Box 218,
5600 MD EINDHOVEN, The Netherlands, Fax. +31 40 27 24825

Internet: http://www.semiconductors.philips.com

© Philips Electronics N.V. 1999 SCA68

All rights are reserved. Reproduction in whole or in part is prohibited without the prior written consent of the copyright owner.

The information presented in this document does not form part of any quotation or contract, is believed to be accurate and reliable and may be changed without notice. No liability will be accepted by the publisher for any consequence of its use. Publication thereof does not convey nor imply any license under patent- or other industrial or intellectual property rights.

Printed in The Netherlands 125006/03/pp7 Date of release: 1999 Oct 29 Document order number: 9397 750 06402

Let's make things better.

Philips Semiconductors

PHILIPS