NPN Silicon High Voltage Transistor

- High breakdown voltage
- Low collector-emitter saturation voltage
- Complementary type: PZTA92 (PNP)

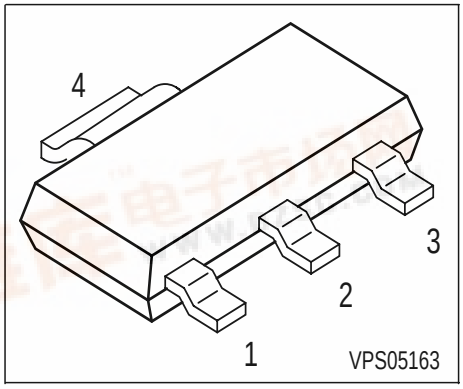

Type	Marking	Pin Configuration				Package
PZTA42	PZTA 42	1=B	2=C	3=E	4=C	SOT223

Maximum Ratings

Parameter	Symbol	Value	Unit
Collector-emitter voltage	V_{CEO}	300	V
Collector-base voltage	V_{CBO}	300	
Emitter-base voltage	V_{EBO}	6	
DC collector current	I_C	500	mA
Base current	I_B	100	
Total power dissipation, T_S = 124 °C	P_{tot}	1.5	W
Junction temperature	T_j	150	°C
Storage temperature	T_{stg}	-65 ... 150	

Thermal Resistance

Junction - soldering point[1)]	R_{thJS}	≤17	K/W

[1]For calculation of R_{thJA} please refer to Application Note Thermal Resistance

Electrical Characteristics at T_A = 25°C, unless otherwise specified.

Parameter	Symbol	Values			Unit
		min.	typ.	max.	
DC Characteristics					
Collector-emitter breakdown voltage I_C = 1 mA, I_B = 0	$V_{(BR)CEO}$	300	-	-	V
Collector-base breakdown voltage I_C = 100 µA, I_B = 0	$V_{(BR)CBO}$	300	-	-	
Emitter-base breakdown voltage I_E = 100 µA, I_C = 0	$V_{(BR)EBO}$	6	-	-	
Collector cutoff current V_{CB} = 200 V, I_E = 0	I_{CBO}	-	-	100	nA
Collector cutoff current V_{CB} = 200 V, I_E = 0 , T_A = 150 °C	I_{CBO}	-	-	20	µA
Emitter cutoff current V_{EB} = 3 V, I_C = 0	I_{EBO}	-	-	100	nA
DC current gain 1) I_C = 1 mA, V_{CE} = 10 V I_C = 10 mA, V_{CE} = 10 V I_C = 30 mA, V_{CE} = 10 V	h_{FE}	 25 40 40	 - - -	 - - -	-
Collector-emitter saturation voltage1) I_C = 20 mA, I_B = 2 mA	V_{CEsat}	-	-	0.5	V
Base-emitter saturation voltage 1) I_C = 20 mA, I_B = 2 mA	V_{BEsat}	-	-	0.9	
AC Characteristics					
Transition frequency I_C = 20 mA, V_{CE} = 10 V, f = 100 MHz	f_T	-	70	-	MHz
Collector-base capacitance V_{CB} = 20 V, f = 1 MHz	C_{cb}	-	-	3	pF

1) Pulse test: t < 300µs; D < 2%

Total power dissipation $P_{tot} = f(T_S)$

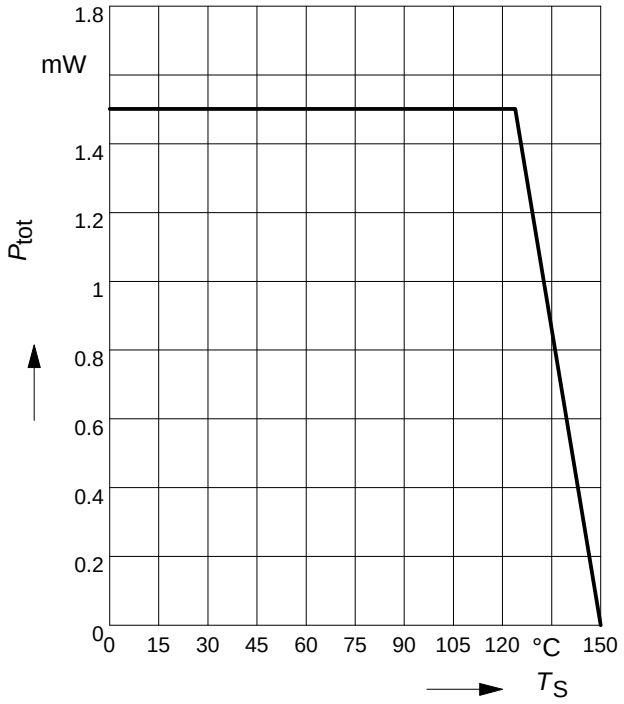

Transition frequency $f_T = f(I_C)$

V_{CE} = 10V, f = 100MHz

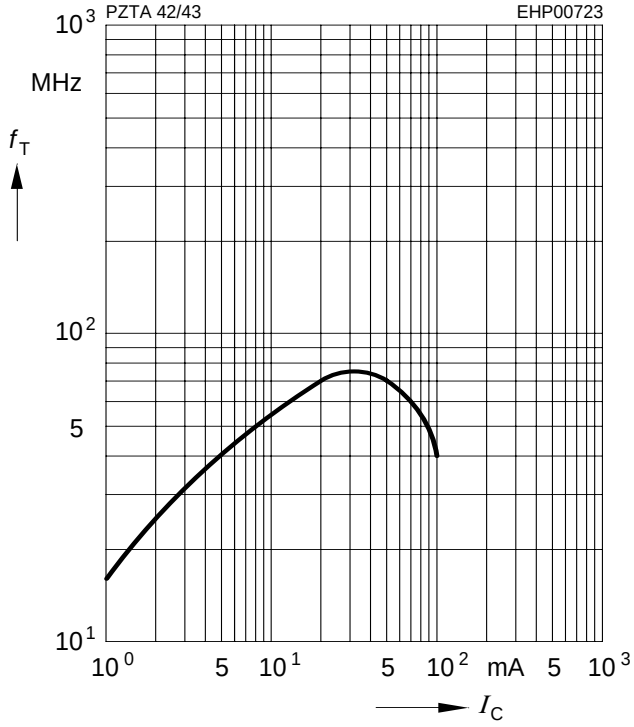

Permissible pulse load

$P_{totmax} / P_{totDC} = f(t_p)$

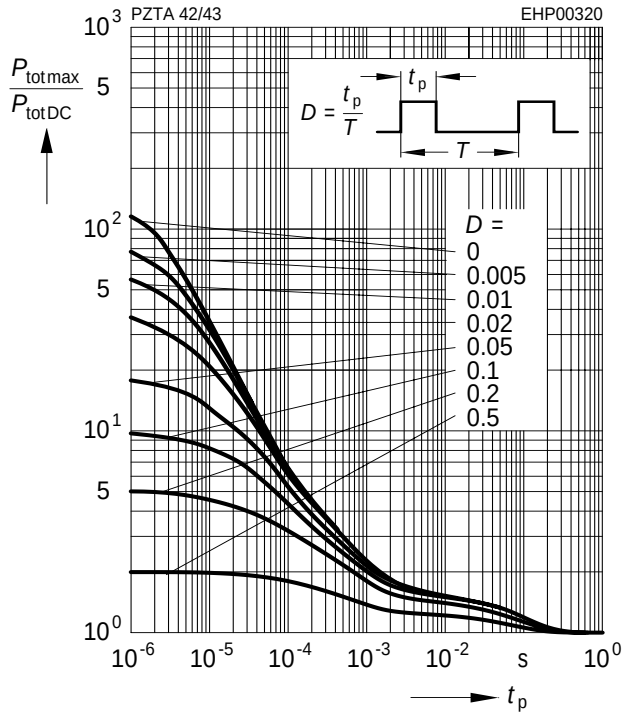

DC current gain $h_{FE} = f(I_C)$

V_{CE} = 10V

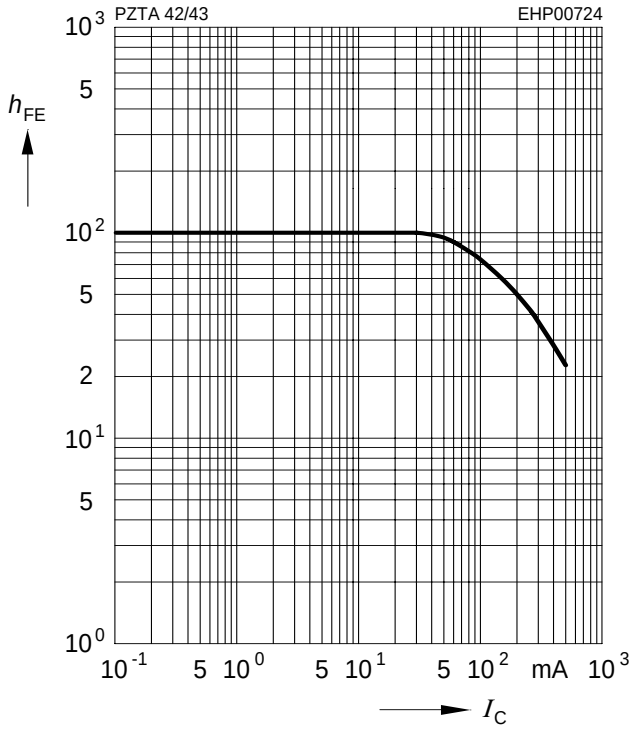

Collector cutoff current $I_{CBO} = f(T_A)$

V_{CB} = 200V

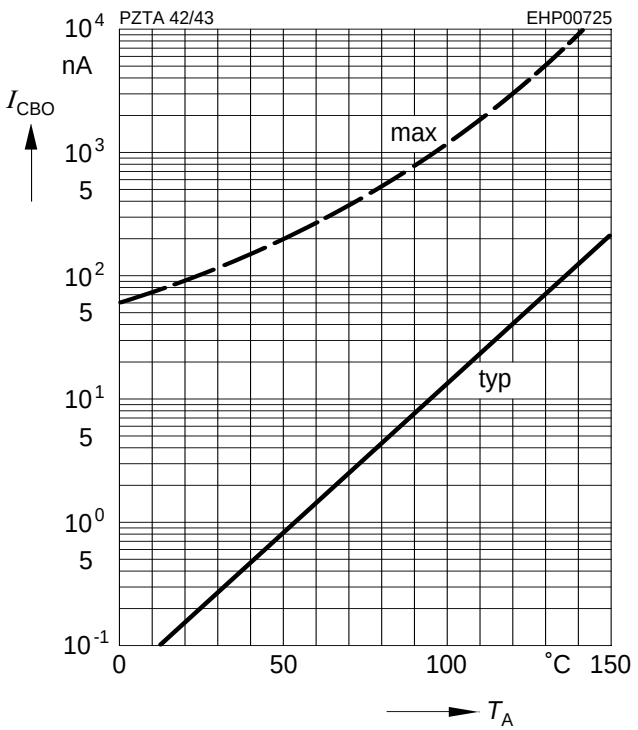

Collector current $I_C = f(V_{BE})$

V_{CE} = 10V