SIEMENS

NPN Silicon Switching Transistor

SMBT 3904

- High DC current gain: 0.1 mA to 100 mA
- Low collector-emitter saturation voltage
- Complementary type: SMBT 3906 (PNP)

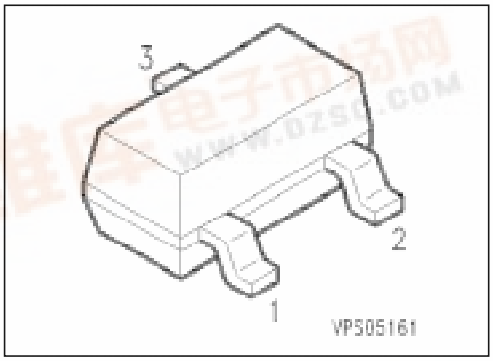

Type	Marking	Ordering Code (tape and reel)	Pin Configuration 1	2	3	Package[1)]
SMBT 3904	s1A	Q68000-A4416	B	E	C	SOT-23

Maximum Ratings

Parameter	Symbol	Values	Unit
Collector-emitter voltage	V_{CE0}	40	V
Collector-base voltage	V_{CB0}	60	
Emitter-base voltage	V_{EB0}	6	
Collector current	I_C	200	mA
Total power dissipation, T_S = 69 °C	P_{tot}	330	mW
Junction temperature	T_j	150	°C
Storage temperature range	T_{stg}	– 65 … + 150	

Thermal Resistance

Junction - ambient[2)]	$R_{th\ JA}$	≤ 315	K/W
Junction - soldering point	$R_{th\ JS}$	≤ 245	

1) For detailed information see chapter Package Outlines.
2) Package mounted on epoxy pcb 40 mm × 40 mm × 1.5 mm/6 cm² Cu.

Electrical Characteristics
at T_A = 25 °C, unless otherwise specified.

Parameter	Symbol	Values			Unit
		min.	typ.	max.	
DC characteristics					
Collector-emitter breakdown voltage I_C = 1 mA	$V_{(BR)CE0}$	40	–	–	V
Collector-base breakdown voltage I_C = 10 µA	$V_{(BR)CB0}$	60	–	–	
Emitter-base breakdown voltage I_E = 10 µA	$V_{(BR)EB0}$	6	–	–	
Collector-base cutoff current V_{CB} = 30 V	I_{CB0}	–	–	50	nA
DC current gain I_C = 100 µA, V_{CE} = 1 V I_C = 1 mA, V_{CE} = 1 V I_C = 10 mA, V_{CE} = 1 V[1)] I_C = 50 mA, V_{CE} = 1 V[1)] I_C = 100 mA, V_{CE} = 1 V[1)]	h_{FE}	 40 70 100 60 30	 – – – – –	 – – 300 – –	–
Collector-emitter saturation voltage[1)] I_C = 10 mA, I_B = 1 mA I_C = 50 mA, I_B = 5 mA	V_{CEsat}	 – –	 – –	 0.2 0.3	V
Base-emitter saturation voltage[1)] I_C = 10 mA, I_B = 1 mA I_C = 50 mA, I_B = 5 mA	V_{BEsat}	 0.65 –	 – –	 0.85 0.95	

1) Pulse test conditions: $t \leq 300$ µs, D = 2 %.

Electrical Characteristics
at T_A = 25 °C, unless otherwise specified.

Parameter	Symbol	Values			Unit
		min.	typ.	max.	
AC characteristics					
Transition frequency I_C = 10 mA, V_{CE} = 20 V, f = 100 MHz	f_T	300	–	–	MHz
Output capacitance V_{CB} = 5 V, f = 1 MHz	C_{obo}	–	–	4	pF
Input capacitance V_{EB} = 0.5 V, f = 1 MHz	C_{ibo}	–	–	8	
Input impedance I_C = 1 mA, V_{CE} = 10 V, f = 1 kHz	h_{11e}	1	–	10	kΩ
Open-circuit reverse voltage transfer ratio I_C = 1 mA, V_{CE} = 10 V, f = 1 kHz	h_{12e}	0.5	–	8	10^{-4}
Short-circuit forward current transfer ratio I_C = 1 mA, V_{CE} = 10 V, f = 1 kHz	h_{21e}	100	–	400	–
Open-circuit output admittance I_C = 1 mA, V_{CE} = 10 V, f = 1 kHz	h_{22e}	1	–	40	µS
Noise figure I_C = 100 µA, V_{CE} = 5 V, R_S = 1 kΩ, f = 1 kHz	F	–	–	5	dB
V_{CC} = 3 V, I_C = 10 mA, I_{B1} = 1 mA $V_{BE(off)}$ = 0.5 V Delay time Rise time V_{CC} = 3 V, I_C = 10 mA, I_{B1} = I_{B2} = 1 mA Storage time Fall time (see diagrams)	 t_d t_r t_{stg} t_f	 – – – –	 – – – –	 35 35 200 50	 ns ns ns ns

Test circuits

Delay and rise time

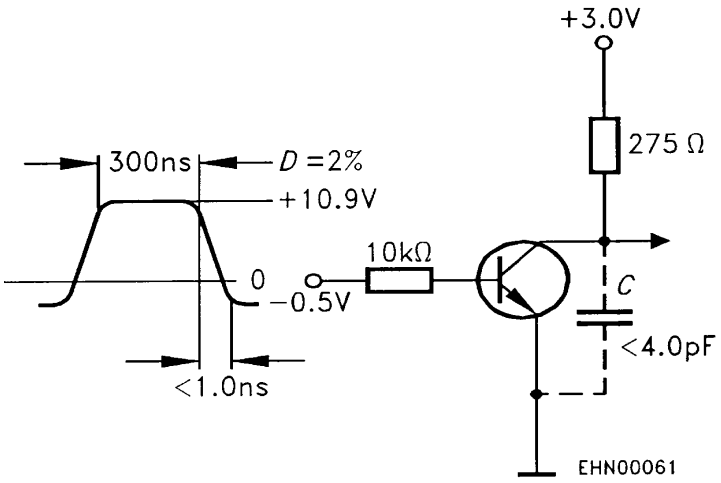

Storage and fall time

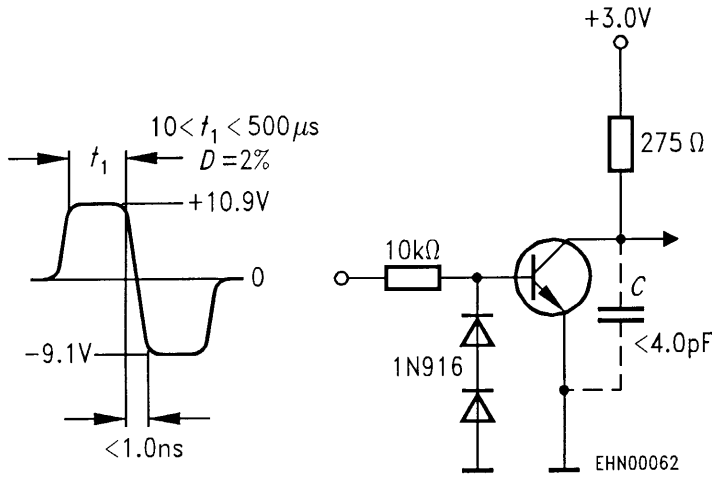

Total power dissipation $P_{tot} = f(T_A{}^*; T_S)$
* Package mounted on epoxy

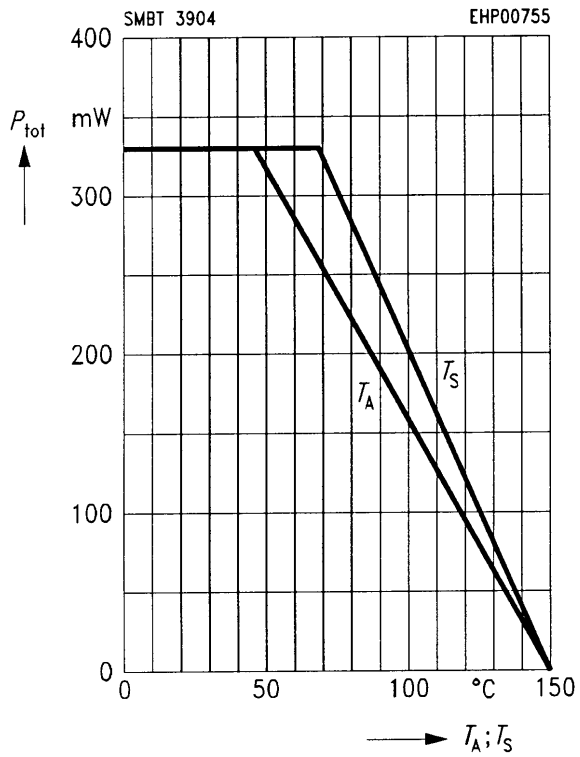

Saturation voltage $I_C = f(V_{BE\,sat}, V_{CE\,sat})$

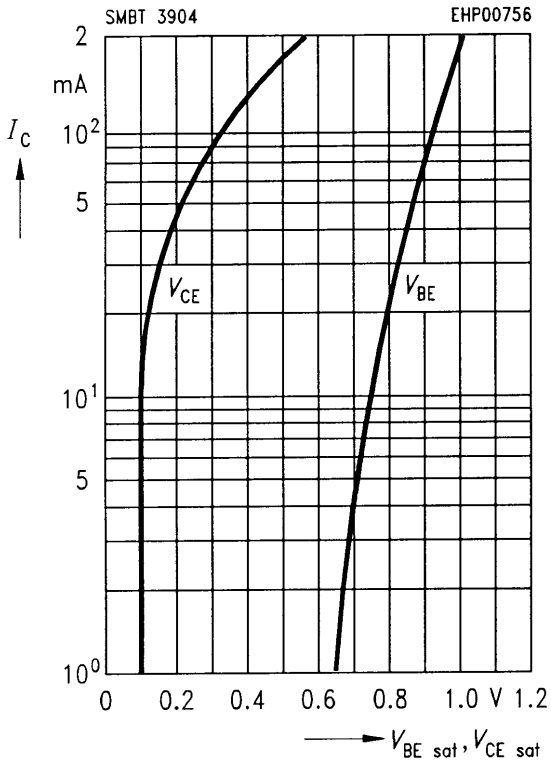

Permissible pulse load $P_{tot\,max} / P_{tot\,DC} = f(t_p)$

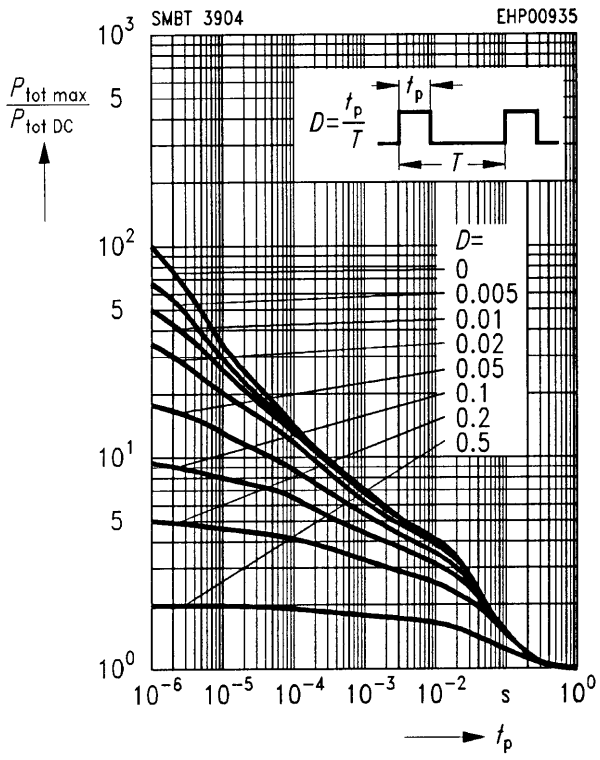

DC current gain $h_{FE} = f(I_C)$
V_{CE} = 10 V, normalized

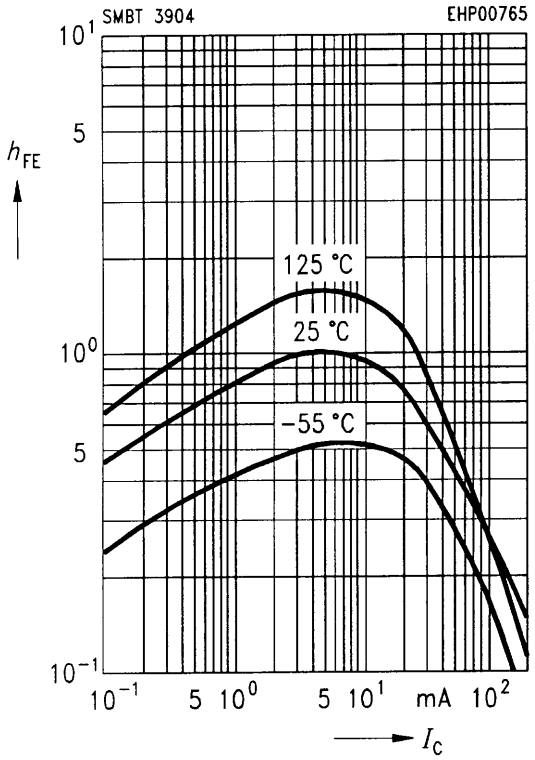

Short-circuit forward current transfer ratio $h_{21e} = f(I_C)$
V_{CE} = 10 V, f = 1 MHz

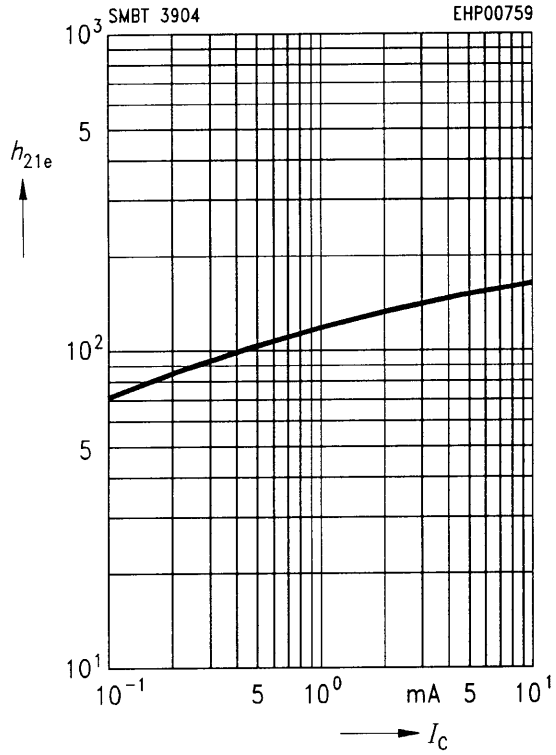

Open-circuit output admittance
$h_{22e} = f(I_C)$
V_{CE} = 10 V, f = 1 MHz

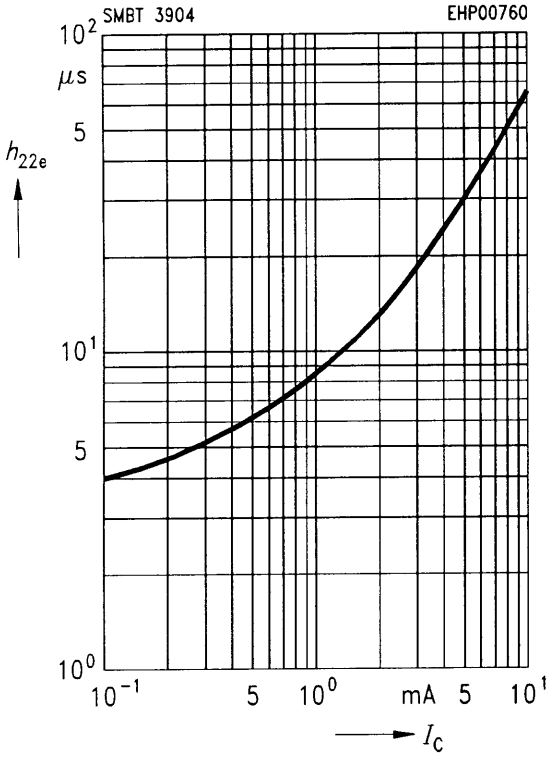

Delay time $t_d = f(I_C)$
Rise time $t_r = f(I_C)$

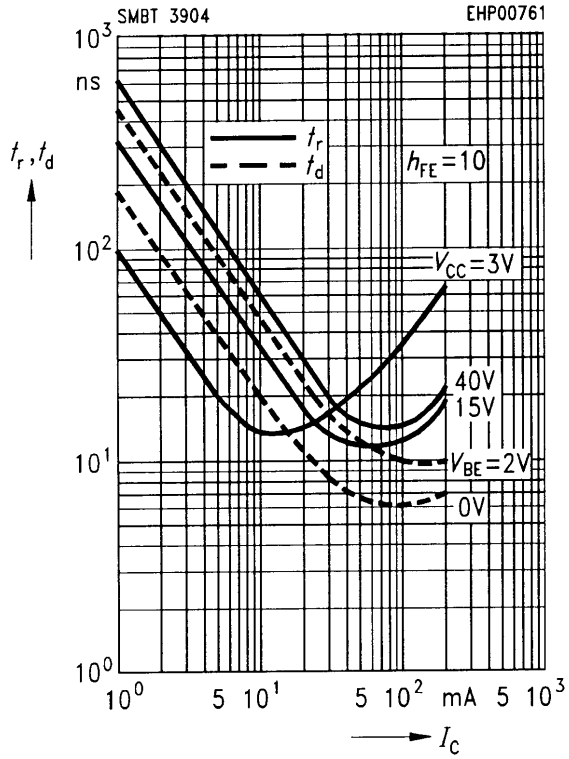

Storage time $t_{stg} = f(I_C)$

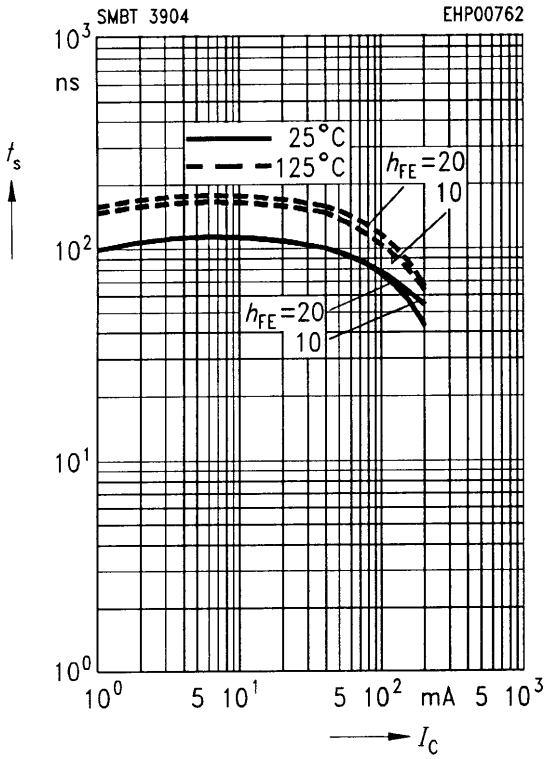

Fall time $t_f = f(I_C)$

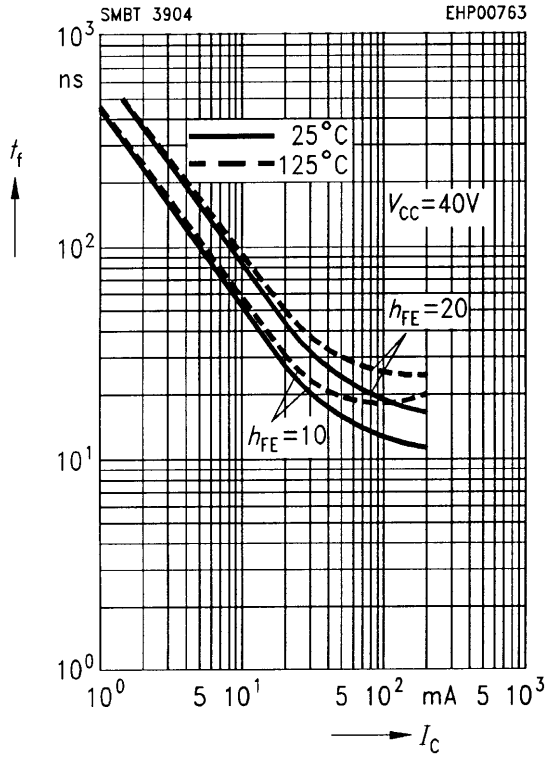

Rise time $t_r = f(I_C)$

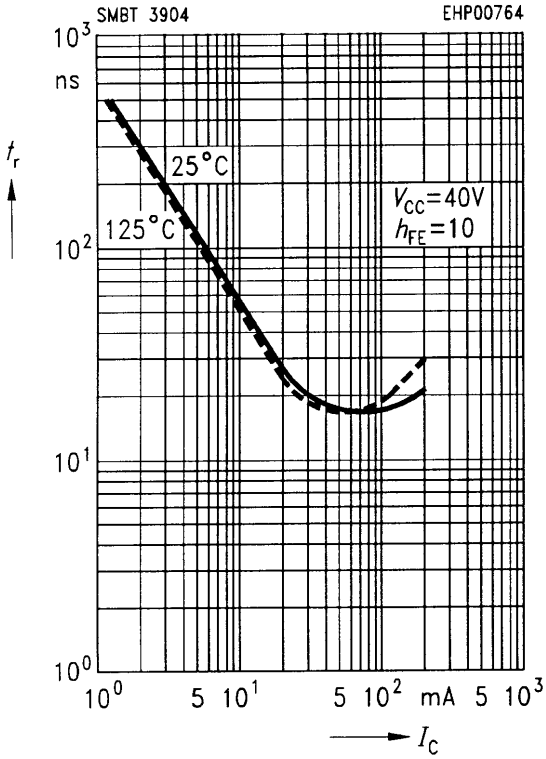

Input impedance
$h_{11e} = f(I_C)$
V_{CE} = 10 V, f = 1 kHz

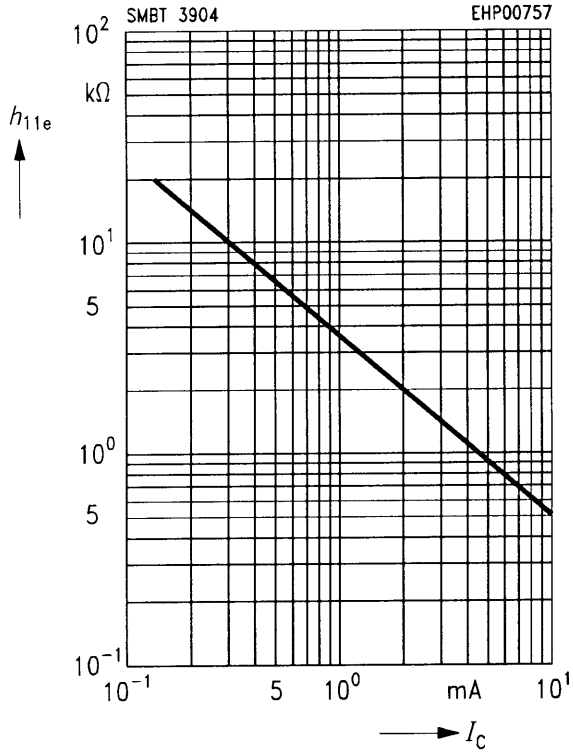

Open-circuit reverse voltage transfer ratio $h_{12e} = f(I_C)$
V_{CE} = 10 V, f = 1 kHz