THIS COPY IS PROVIDED ON A RESTRICTED BASIS AND IS NOT TO BE USED IN ANY WAY DETRIMENTAL TO THE INTERESTS OF PANDUIT CORP.

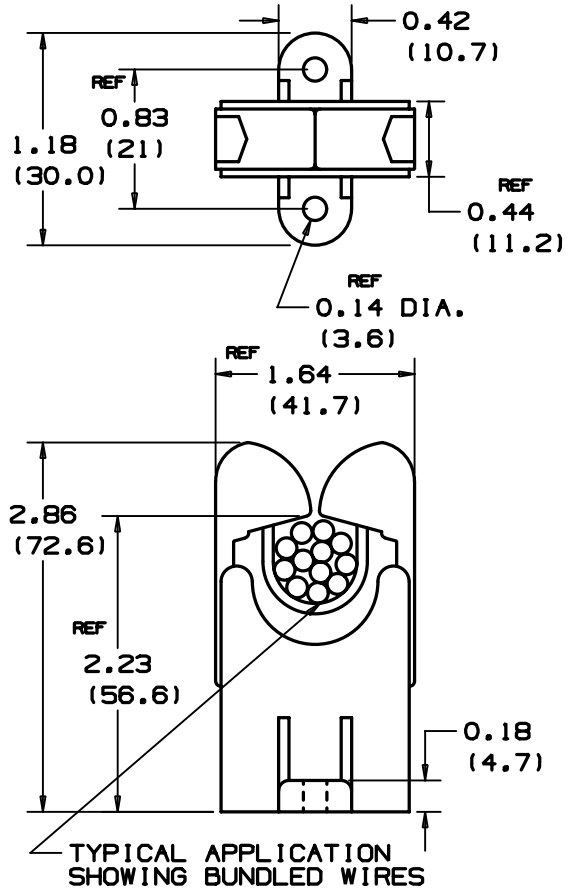

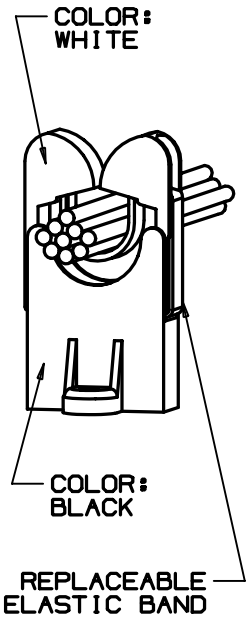

PANDUIT PART NO.	MAX. BUNDLE DIA. in/mm	RECM. FASTENER	WEIGHT lb/g/100 pcs
RER1.25-S6	1.25 (31.8)	#6 SCRW. (M3)	3.4 (1529)

NOTES:
1. SEE CURRENT PRICE SHEET FOR PART NUMBER SUFFIX DESIGNATION FOR PACKAGE SIZE

(DIMENSIONS IN PARENTHESES ARE IN METRIC.)

CAD FILENAME/LAYERS: G0023910_PB_RER1.25_01

PANDUIT CORP. TINLEY PARK, ILLINOIS

ELASTIC RETAINER, RER1.25-S6

UNLESS OTHERWISE SPECIFIED, DIMENSIONAL TOLERANCES ARE:
(.X) ±N/A (.XXX) ± N/A
(.XX) ± .020(.5) ANGLES ± 5°

UNLESS OTHERWISE SPECIFIED, ALL DIMENSIONS ARE GIVEN IN INCHES, THIRD ANGLE PROJECTION.

REV	DATE	BY	CHK	DESCRIPTION	ECN - R		CUST	SUP
1	7/21/03	JAD		REVISED ARM MATERIAL	GB023910	1		
R	6/19/01	LGG		INITIAL RELEASE-REPLACED SS-8227	GB023910	R		

DRAWN BY LGG
DATE 4/19/01
CHK'D

MAT'L: NYLON BASE & RUBBER MODIFIED NYLON 6/6 ARM

SCALE FULL

DRAWING NO. GB023910

DWG SIZE A