查询RFT2P03L供应商 捷多邦，专业PCB打样工厂，24小时加急出货

Data Sheet July 1999 File Number 4574.2

2.1A, 30V, 0.150 Ohm, P-Channel Logic Level, Power MOSFET

This product is a P-Channel power MOSFET manufactured using the MegaFET process. This process, which uses feature sizes approaching those of LSI circuits, gives optimum utilization of silicon, resulting in outstanding performance. It was designed for use in applications such as switching regulators, switching converters, motor drivers, and relay drivers. This transistor can be operated directly from integrated circuits.

Formerly developmental type TA49222.

Ordering Information

PART NUMBER	PACKAGE	BRAND
RFT2P03L	SOT-223	2P03L

NOTE: RFT2P03L is available only in tape and reel. Use the entire part number and add the suffix T.

Features

- 2.1A, 30V
- $r_{DS(ON)}$ = 0.150Ω
- Temperature Compensating PSPICE® Model
- Thermal Impedance SPICE Model
- Peak Current vs Pulse Width Curve
- UIS Rating Curve
- Related Literature
  - TB334, “Guidelines for Soldering Surface Mount Components to PC Boards”

Symbol

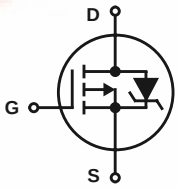

Packaging

SOT-223

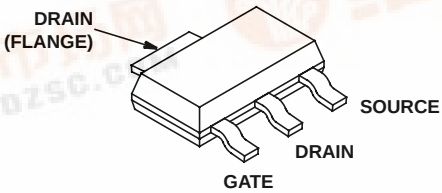

找PDF 维库一下 pdf.dzsc.com

CAUTION: These devices are sensitive to electrostatic discharge; follow proper ESD Handling Procedures.

Absolute Maximum Ratings $T_A = 25^oC$, Unless Otherwise Specified

			UNITS
Drain to Source Voltage (Note 1)	V_{DSS}	-30	V
Drain to Gate Voltage (R_{GS} = 20kΩ) (Note 1)	V_{DGR}	-30	V
Gate to Source Voltage	V_{GS}	±20V	V
Drain Current			
Continuous (Note 2) (Figure 2)	I_D	2.1	A
Pulsed Drain Current	I_{DM}	Figure 5	
Pulsed Avalanche Rating	E_{AS}	Figures 6, 14, 15	
Power Dissipation (Note 2)	P_D	1.1	W
Derate Above 25^oC		0.009	$W/^oC$
Operating and Storage Temperature	T_J, T_{STG}	-55 to 150	^oC
Maximum Temperature for Soldering			
Leads at 0.063in (1.6mm) from Case for 10s	T_L	300	^oC
Package Body for 10s, See Techbrief 334	T_{pkg}	260	^oC

CAUTION: Stresses above those listed in "Absolute Maximum Ratings" may cause permanent damage to the device. This is a stress only rating and operation of the device at these or any other conditions above those indicated in the operational sections of this specification is not implied.

NOTE:

1. $T_J = 25^oC$ to 125^oC.

Electrical Specifications $T_A = 25^oC$, Unless Otherwise Specified

PARAMETER	SYMBOL	TEST CONDITIONS		MIN	TYP	MAX	UNITS
Drain to Source Breakdown Voltage	BV_{DSS}	I_D = 250µA, V_{GS} = 0V (Figure 11)		-30	-	-	V
Gate to Source Threshold Voltage	$V_{GS(TH)}$	$V_{GS} = V_{DS}$, I_D = 250µA (Figure 10)		-1	-	-3	V
Zero Gate Voltage Drain Current	I_{DSS}	V_{DS} = -30V, V_{GS} = 0V		-	-	-1	µA
		V_{DS} = -30V, V_{GS} = 0V, $T_A = 150^oC$		-	-	-50	µA
Gate to Source Leakage Current	I_{GSS}	V_{GS} = ±20V		-	-	±100	nA
Drain to Source On Resistance	$r_{DS(ON)}$	I_D = 2.1A, V_{GS} = -10V (Figure 9)		-	0.120	0.150	Ω
		I_D = 2.1A, V_{GS} = -4.5V (Figure 9)		-	0.300	0.360	Ω
Turn-On Time	t_{ON}	V_{DD} = -15V, $I_D \cong$ 2.1A, R_L = 7.1Ω, V_{GS} = –10V, R_{GS} = 21Ω		-	-	50	ns
Turn-On Delay Time	$t_{d(ON)}$			-	13	-	ns
Rise Time	t_r			-	18	-	ns
Turn-Off Delay Time	$t_{d(OFF)}$			-	43	-	ns
Fall Time	t_f			-	24	-	ns
Turn-Off Time	t_{OFF}			-	-	100	ns
Total Gate Charge	$Q_{g(TOT)}$	V_{GS} = 0V to -20V	V_{DD} = -15V, $I_D \cong$ 2.1A, R_L = 7.1Ω $I_{g(REF)}$ = -1.0mA (Figure 13)	-	27	33	nC
Gate Charge at -10V	$Q_{g(-10)}$	V_{GS} = 0V to -10V		-	14	17	nC
Threshold Gate Charge	$Q_{g(TH)}$	V_{GS} = 0V to -2V		-	1.3	1.6	nC
Input Capacitance	C_{ISS}	V_{DS} = -25V, V_{GS} = 0V, f = 1MHz (Figure 12)		-	620	-	pF
Output Capacitance	C_{OSS}			-	240	-	pF
Reverse Transfer Capacitance	C_{RSS}			-	30	-	pF
Thermal Resistance Junction to Ambient	$R_{\theta JA}$	Pad Area = 0.171 in^2 (See note 2)		-	-	110	$^oC/W$
		Pad Area = 0.068 in^2 (See Tech Brief 377)		-	-	128	$^oC/W$
		Pad Area = 0.026 in^2 (See Tech Brief 377)		-	-	147	$^oC/W$

Source to Drain Diode Specifications

PARAMETER	SYMBOL	TEST CONDITIONS	MIN	TYP	MAX	UNITS
Source to Drain Diode Voltage	V_{SD}	I_{SD} = -2.1A	-	-	-1.25	V
Reverse Recovery Time	t_{rr}	I_{SD} = -2.1A, dI_{SD}/dt = 100A/µs	-	-	49	ns
Reverse Recovered Charge	Q_{RR}	I_{SD} = -2.1A, dI_{SD}/dt = 100A/µs	-	-	45	nC

NOTE:

2. $110^oC/W$ measured using FR-4 board with 0.171 in^2 footprint for 1000 seconds.

Typical Performance Curves Unless Otherwise Specified

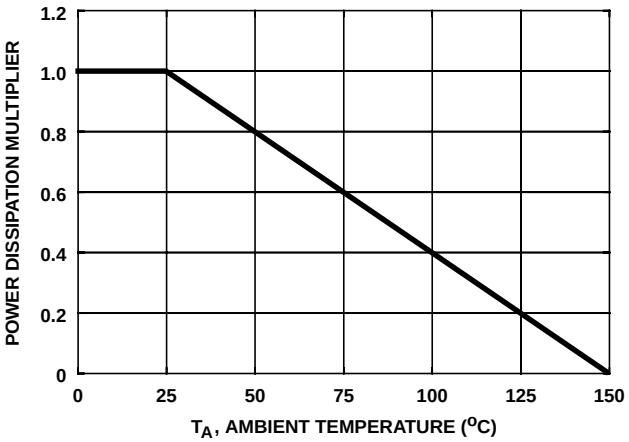

FIGURE 1. NORMALIZED POWER DISSIPATION vs AMBIENT TEMPERATURE

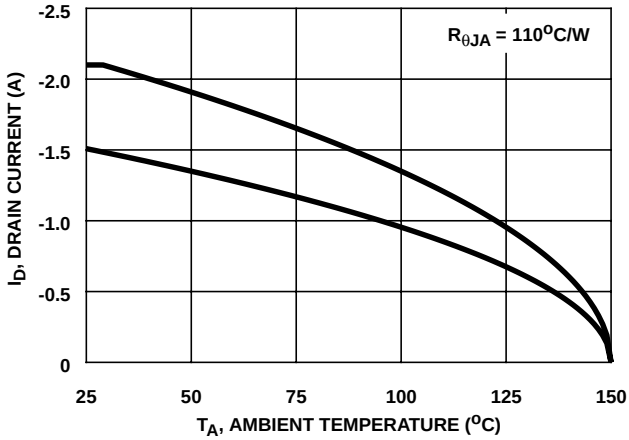

FIGURE 2. MAXIMUM CONTINUOUS DRAIN CURRENT vs AMBIENT TEMPERATURE

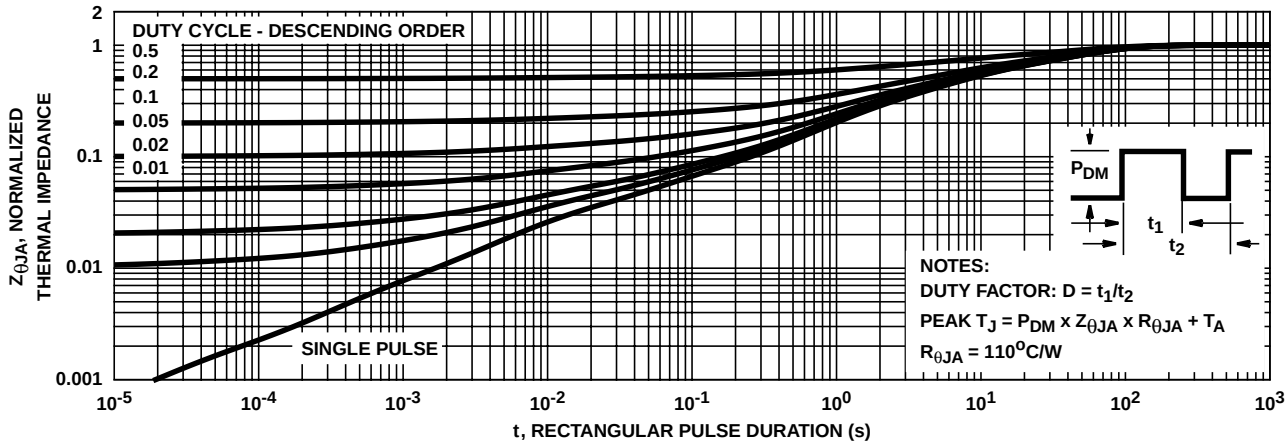

FIGURE 3. NORMALIZED MAXIMUM TRANSIENT THERMAL IMPEDANCE

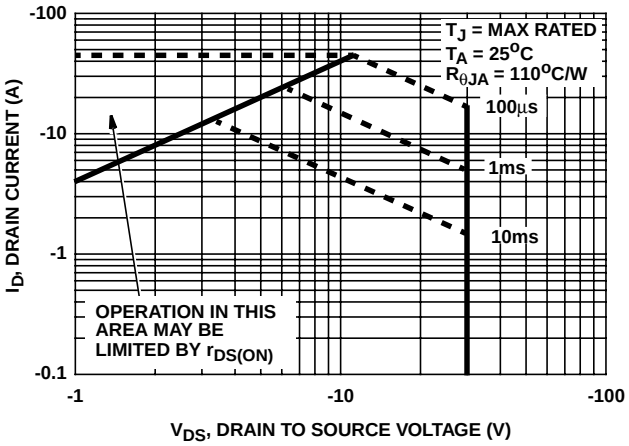

FIGURE 4. FORWARD BIAS SAFE OPERATING AREA

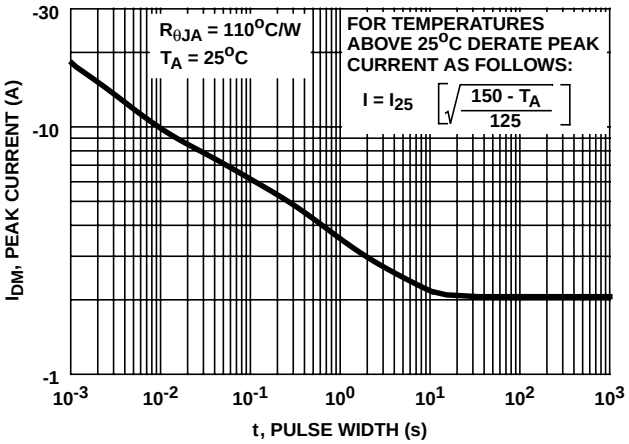

FIGURE 5. PEAK CURRENT CAPABILITY

Typical Performance Curves Unless Otherwise Specified (Continued)

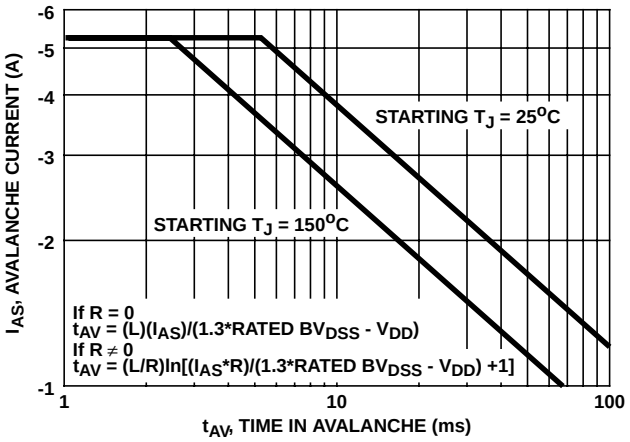

NOTE: Refer to Intersil Application Notes AN9321 and AN9322.

FIGURE 6. UNCLAMPED INDUCTIVE SWITCHING CAPABILITY

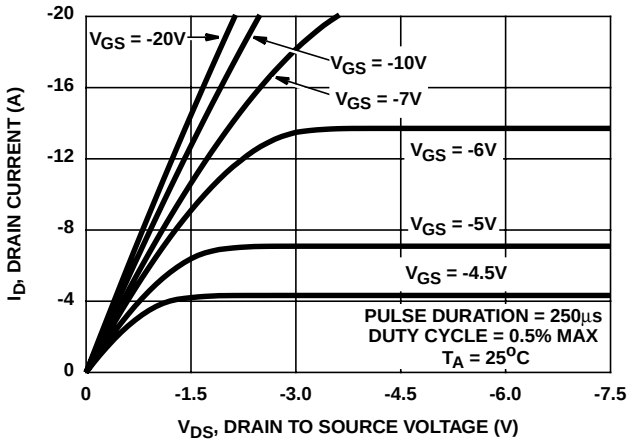

FIGURE 7. SATURATION CHARACTERISTICS

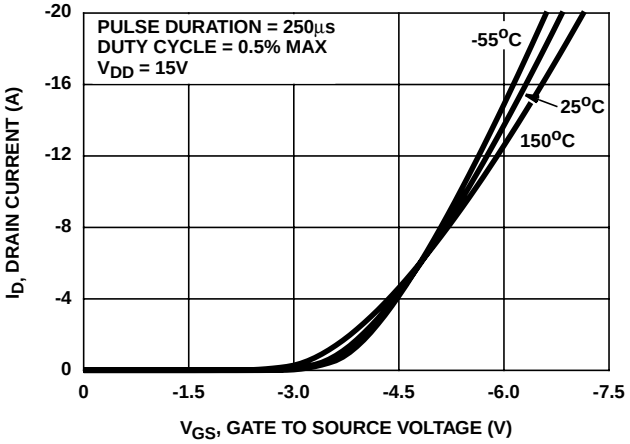

FIGURE 8. TRANSFER CHARACTERISTICS

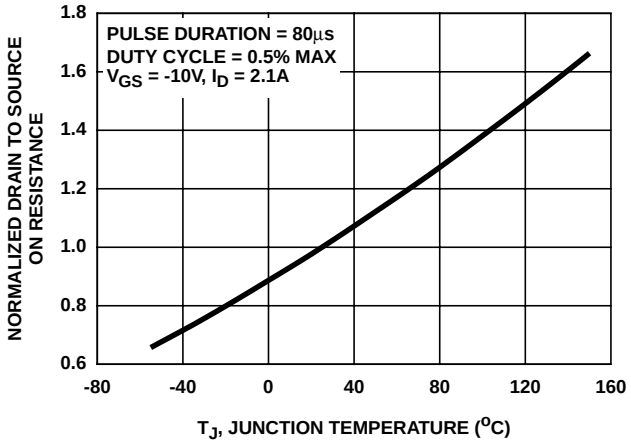

FIGURE 9. NORMALIZED DRAIN TO SOURCE ON RESISTANCE vs JUNCTION TEMPERATURE

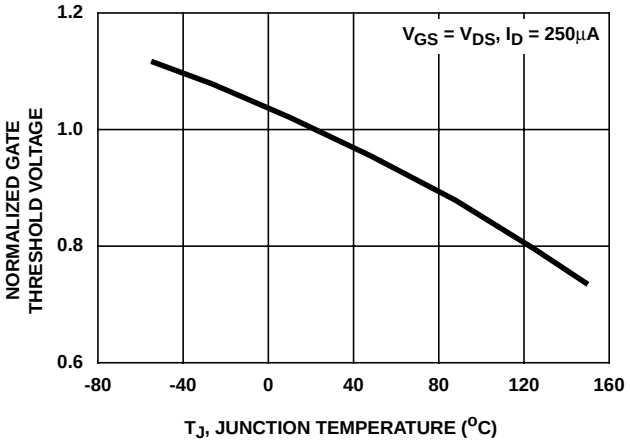

FIGURE 10. NORMALIZED GATE THRESHOLD VOLTAGE vs JUNCTION TEMPERATURE

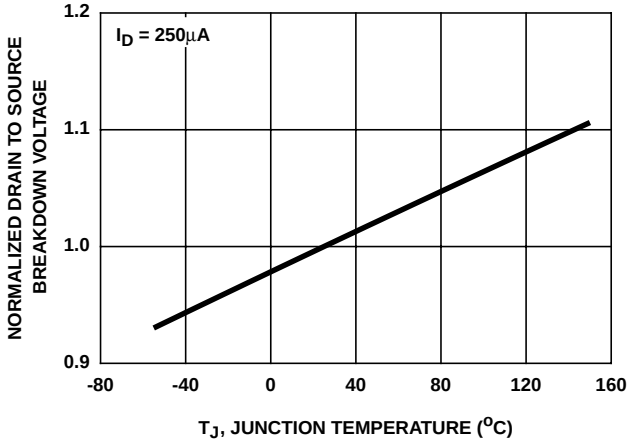

FIGURE 11. NORMALIZED DRAIN TO SOURCE BREAKDOWN VOLTAGE vs JUNCTION TEMPERATURE

Typical Performance Curves Unless Otherwise Specified (Continued)

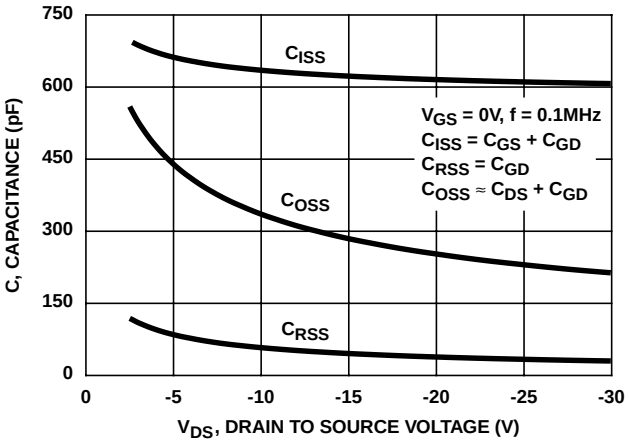

FIGURE 12. CAPACITANCE vs DRAIN TO SOURCE VOLTAGE

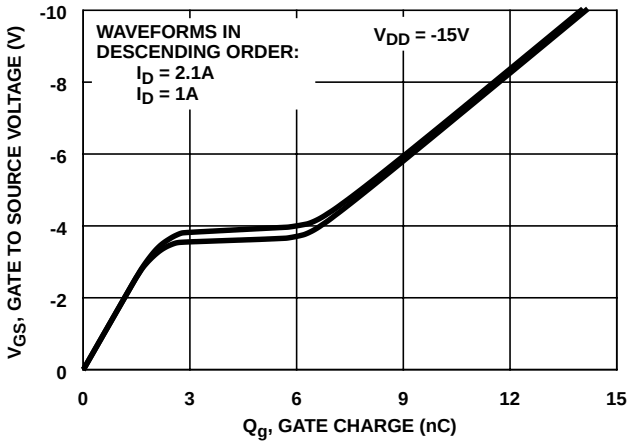

NOTE: Refer to Intersil Application Notes AN7254 and AN7260.

FIGURE 13. GATE CHARGE WAVEFORMS FOR CONSTANT GATE CURRENT

Test Circuits and Waveforms

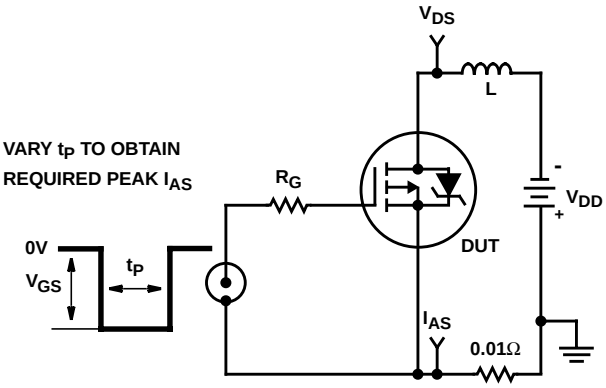

FIGURE 14. UNCLAMPED ENERGY TEST CIRCUIT

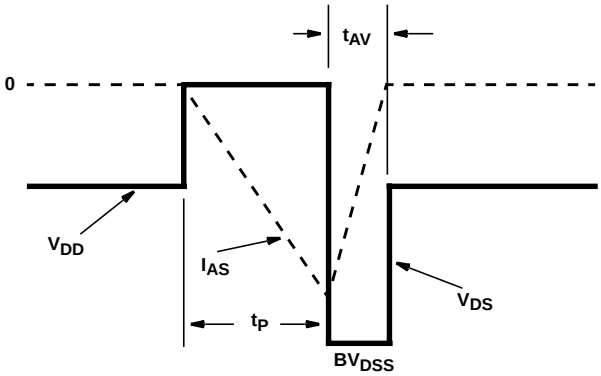

FIGURE 15. UNCLAMPED ENERGY WAVEFORMS

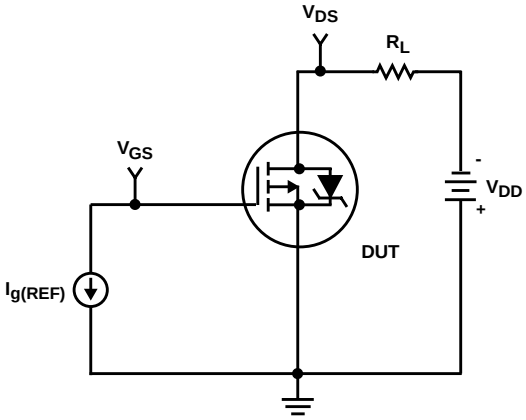

FIGURE 16. GATE CHARGE TEST CIRCUIT

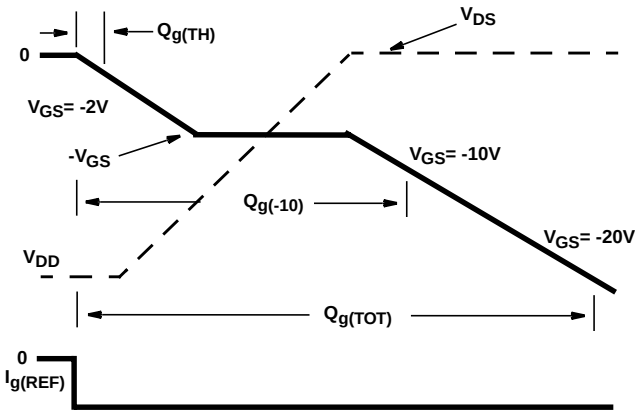

FIGURE 17. GATE CHARGE WAVEFORM

Test Circuits and Waveforms (Continued)

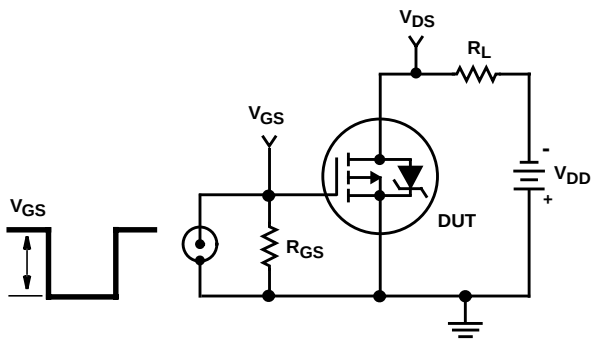

FIGURE 18. SWITCHING TIME TEST CIRCUIT

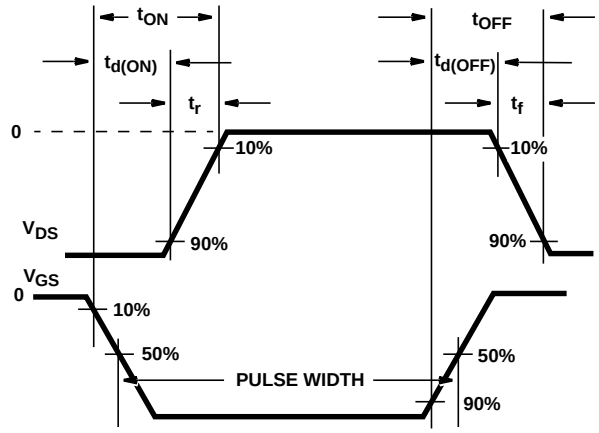

FIGURE 19. RESISTIVE SWITCHING WAVEFORMS

Thermal Resistance vs. Mounting Pad Area

The maximum rated junction temperature, T_{JM}, and the thermal resistance of the heat dissipating path determines the maximum allowable device power dissipation, P_{DM}, in an application. Therefore the application's ambient temperature, T_A (^oC), and thermal impedance $R_{\theta JA}$ ($^oC/W$) must be reviewed to ensure that T_{JM} is never exceeded. Equation 1 mathematically represents the relationship and serves as the basis for establishing the rating of the part.

$$P_{DM} = \frac{(T_{JM} - T_A)}{R_{\theta JA}} \quad \text{(EQ. 1)}$$

In using surface mount devices such as the SOT-223 package, the environment in which it is applied will have a significant influence on the part's current and maximum power dissipation ratings. Precise determination of the P_{DM} is complex and influenced by many factors:

1. Mounting pad area onto which the device is attached and whether there is copper on one side or both sides of the board
2. The number of copper layers and the thickness of the board
3. The use of external heat sinks
4. The use of thermal vias
5. Air flow and board orientation
6. For non steady state applications, the pulse width, the duty cycle and the transient thermal response of the part, the board and the environment they are in.

Intersil provides thermal information to assist the designer's preliminary application evaluation. Figure 20 defines the $R_{\theta JA}$ for the device as a function of the top copper (component side) area. This is for a horizontally positioned FR-4 board with 1oz copper after 1000 seconds of steady state power with no air flow. This graph provides the necessary information for calculation of the steady state junction temperature or power dissipation. Pulse applications can be evaluated using the Intersil device Spice thermal model or manually utilizing the normalized maximum transient thermal impedance curve.

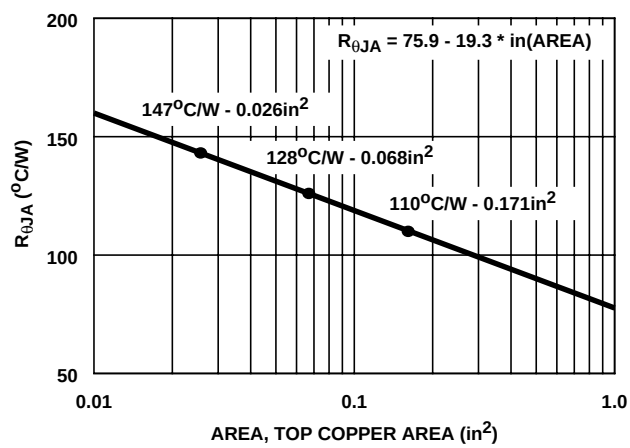

FIGURE 20. THERMAL RESISTANCE vs MOUNTING PAD AREA

Displayed on the curve are $R_{\theta JA}$ values listed in the Electrical Specifications table. The points were chosen to depict the compromise between the copper board area, the thermal resistance and ultimately the power dissipation, P_{DM}. Thermal resistances corresponding to other component side copper areas can be obtained from Figure 20 or by calculation using Equation 2. The area, in square inches is the top copper area including the gate and source pads.

$$R_{\theta JA} = 75.9 - 19.3 \times \text{in}(\text{Area}) \quad \text{(EQ. 2)}$$

PSPICE Electrical Model

.SUBCKT RFT2P03L 2 1 3 ; REV July 1998

CA 12 8 6.5e-10
CB 15 14 6.4e-10
CIN 6 8 5.77e-10

DBODY 5 7 DBODYMOD
DBREAK 7 11 DBREAKMOD
DPLCAP 10 6 DPLCAPMOD

EBREAK 5 11 17 18 -41.2
EDS 14 8 5 8 1
EGS 13 8 6 8 1
ESG 5 10 8 6 1
EVTHRES 6 21 19 8 1
EVTEMP 6 20 18 22 1

IT 8 17 1

LDRAIN 2 5 1e-9
LGATE 1 9 1.27e-9
LSOURCE 3 7 4.2e-10

MMED 16 6 8 8 MMEDMOD
MSTRO 16 6 8 8 MSTROMOD
MWEAK 16 21 8 8 MWEAKMOD

RBREAK 17 18 RBREAKMOD 1
RDRAIN 50 16 RDRAINMOD 24e-3
RGATE 9 20 5.2
RLDRAIN 2 5 10
RLGATE 1 9 12.7
RLSOURCE 3 7 4.2
RSLC1 5 51 RSLCMOD 1e-6
RSLC2 5 50 1e3
RSOURCE 8 7 RSOURCEMOD 68e-3
RVTHRES 22 8 RVTHRESMOD 1
RVTEMP 18 19 RVTEMPMOD 1

S1A 6 12 13 8 S1AMOD
S1B 13 12 13 8 S1BMOD
S2A 6 15 14 13 S2AMOD
S2B 13 15 14 13 S2BMOD

VBAT 22 19 DC 1

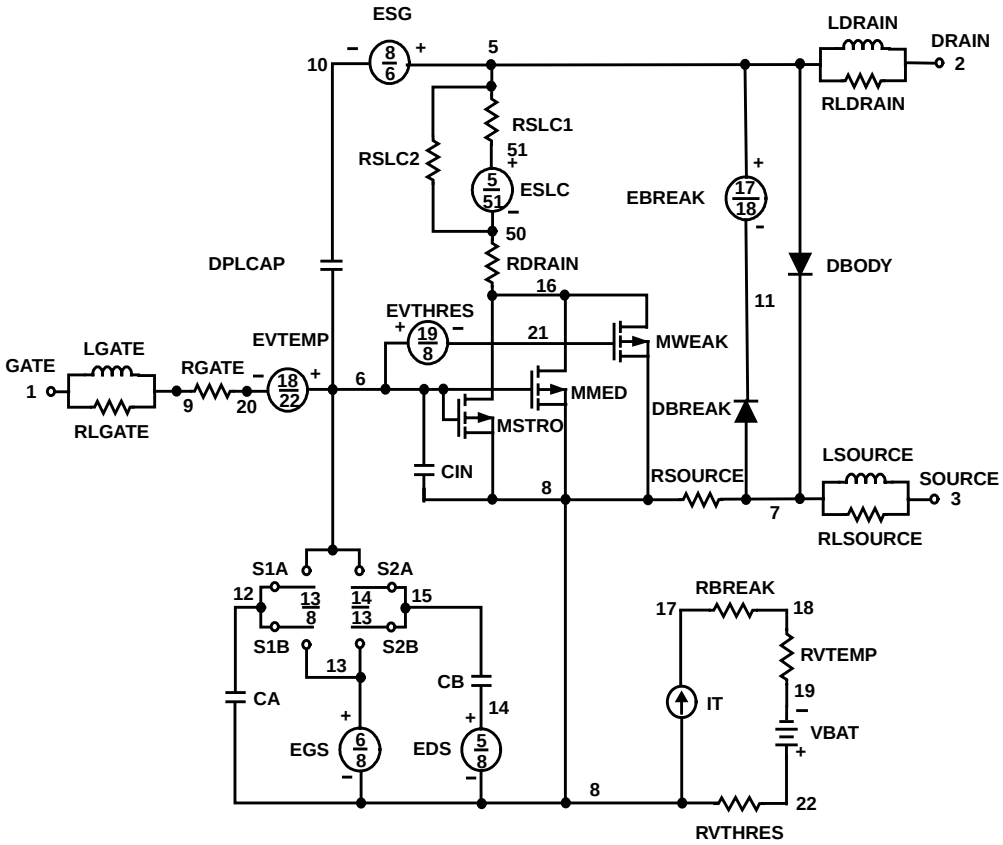


```
ESLC 51 50 VALUE={(V(5,51)/ABS(V(5,51)))*(PWR(V(5,51)/(1e-6*45),2.5))}

.MODEL DBODYMOD D (IS = 2e-13  RS = 3.5e-2  IKF = 0.7 XTI = 8.2 TRS1 = 6e-4  TRS2 = 5e-7  CJO = 7.3e-10  TT = 3.51e-8 M = 0.4
.MODEL DBREAKMOD D (RS = 2e-1   TRS1 = 1e-4  TRS2 = 1e-5)
.MODEL DPLCAPMOD D (CJO = 2.65e-10  IS = 1e-30  N = 10 M = 0.63)
.MODEL MMEDMOD PMOS (VTO = -2.6 KP = 1.2 IS = 1e-30 N = 10 TOX = 1 L = 1u W = 1u RG = 5.2)
.MODEL MSTROMOD PMOS (VTO = -3.27 KP = 6 IS = 1e-30 N = 10 TOX = 1 L = 1u W = 1u)
.MODEL MWEAKMOD PMOS (VTO = -2.11 KP = 0.07 IS = 1e-30 N = 10 TOX = 1 L = 1u W = 1u RG = 52 RS = 0.1)
.MODEL RBREAKMOD RES (TC1 = 9.2e-4  TC2 = -1e-7)
.MODEL RDRAINMOD RES (TC1 = 1.8e-2  TC2 = 2.1e-5)
.MODEL RSLCMOD RES (TC1 = 3.5e-3 TC2 = 1.3e-6)
.MODEL RSOURCEMOD RES (TC1 = 0 TC2 = 0)
.MODEL RVTHRESMOD RES (TC1 = 8.8e-4 TC2 = 6.1e-6)
.MODEL RVTEMPMOD RES (TC1 = -2e-3  TC2 = 1e-6)

.MODEL S1AMOD VSWITCH (RON = 1e-5  ROFF = 0.1  VON = 5.7  VOFF= 2.7)
.MODEL S1BMOD VSWITCH (RON = 1e-5  ROFF = 0.1  VON = 2.7 VOFF= 5.7)
.MODEL S2AMOD VSWITCH (RON = 1e-5  ROFF = 0.1  VON = -0.1  VOFF= -2.4)
.MODEL S2BMOD VSWITCH (RON = 1e-5  ROFF = 0.1  VON = -2.4  VOFF= -0.1)

.ENDS
```

NOTE: For further discussion of the PSPICE model, consult **A New PSPICE Sub-Circuit for the Power MOSFET Featuring Global Temperature Options**; IEEE Power Electronics Specialist Conference Records, 1991, written by William J. Hepp and C. Frank Wheatley.

SPICE Thermal Model

REV July 98

RFT2P03L

CTHERM1 9 8 1.9e-5
CTHERM2 8 7 3.0e-4
CTHERM3 7 6 1.2e-3
CTHERM4 6 5 3.5e-3
CTHERM5 5 4 2.0e-2
CTHERM6 4 3 6.5e-2
CTHERM7 3 2 2.0e-1
CTHERM8 2 1 1

RTHERM1 9 8 3.5e-2
RTHERM2 8 7 8.5e-2
RTHERM3 7 6 3.5e-1
RTHERM4 6 5 1.85
RTHERM5 5 4 2.75
RTHERM6 4 3 15
RTHERM7 3 2 30
RTHERM8 2 1 50

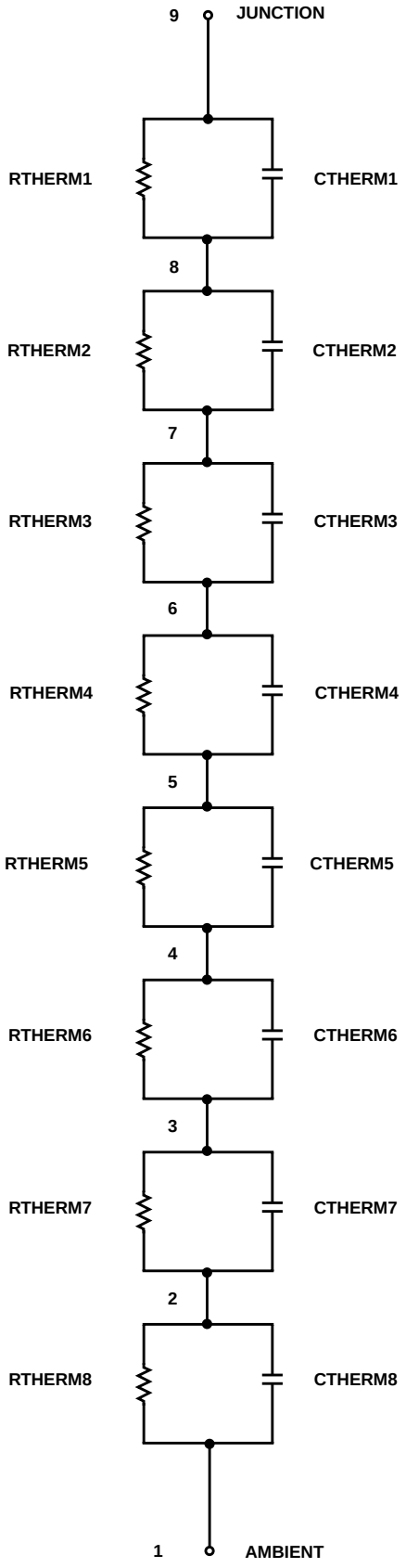

All Intersil semiconductor products are manufactured, assembled and tested under **ISO9000** quality systems certification.

Intersil semiconductor products are sold by description only. Intersil Corporation reserves the right to make changes in circuit design and/or specifications at any time without notice. Accordingly, the reader is cautioned to verify that data sheets are current before placing orders. Information furnished by Intersil is believed to be accurate and reliable. However, no responsibility is assumed by Intersil or its subsidiaries for its use; nor for any infringements of patents or other rights of third parties which may result from its use. No license is granted by implication or otherwise under any patent or patent rights of Intersil or its subsidiaries.

For information regarding Intersil Corporation and its products, see web site **http://www.intersil.com**

Sales Office Headquarters

NORTH AMERICA
Intersil Corporation
P. O. Box 883, Mail Stop 53-204
Melbourne, FL 32902
TEL: (407) 724-7000
FAX: (407) 724-7240

EUROPE
Intersil SA
Mercure Center
100, Rue de la Fusee
1130 Brussels, Belgium
TEL: (32) 2.724.2111
FAX: (32) 2.724.22.05

ASIA
Intersil (Taiwan) Ltd.
7F-6, No. 101 Fu Hsing North Road
Taipei, Taiwan
Republic of China
TEL: (886) 2 2716 9310
FAX: (886) 2 2715 3029