查询RTC63421供应商 捷多邦，专业PCB打样工厂，24小时加急出货



## 4-bit MULTIFUNCTIONAL REAL TIME CLOCK MODULE

# RTC-63421/63421M/63423

- Builtin crystal unit allows adjustment-free efficient operation.
- Alarm interruption of sec. to month and day of week possible.
- Provided with microcomputer compatible bus interface.
- Standard signal output selectable in a range of 10min. to 1024 Hz.
- Either sec. to hour and day of week or sec. to year and day of week is selectable.
- Reference area of time /alarm register is setabil. Provided with RAM bits. (marked on "*" which is shown resister table)
- Provided with START/STOP 30 second adjusting function.
- Similar mounting method (RTC-63423) to the used for normal type SMD IC.

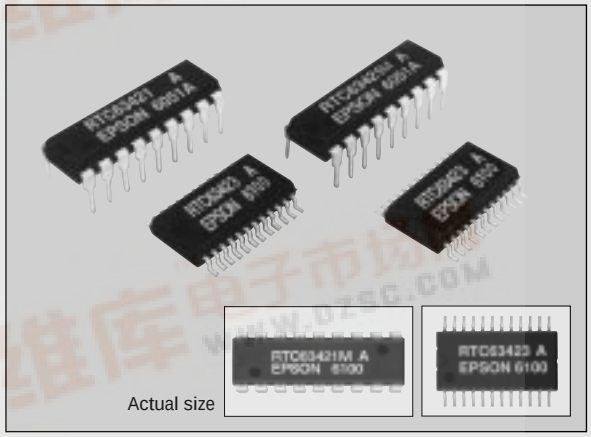


| Model | Applicable CPU |
|---|---|
| RTC-63421 | Intel bus system |
| RTC-63421M | Motorola bus system |
| RTC-63423 | "MOTEL" bus system |

## Specifications (characteristics)

### Absolute Max. rating

| Item | Symbol | Condition | Specifications | Unit |
|---|---|---|---|---|
| Power source voltage | $V_{DD}$ | Ta=25°C | -0.3 to 7.0 | V |
| Input voltage | $V_{IN}$ | Ta=25°C | -0.3 to $V_{DD}$+0.3 | V |
| storage temperature | $T_{STG}$ | RTC-63421 RTC-63421M | -55 to +85 | °C |
| | | RTC-63423 | -55 to +125 | °C |
| Soldering condition | $T_{SOL}$ | RTC-63421 RTC-63421M | Under 260°C within 10 sec. (lead part) (package should be less than 150°C) | |
| | | RTC-63423 | Twice at under 260°C within 10 sec. or under 230°C within 3 min. | |

### Operating range

| Item | Symbol | Condition | Specifications | Unit |
|---|---|---|---|---|
| Operating voltage | $V_{DD}$ | — | 4.5 to 5.5 | V |
| Operating temperature | $T_{OPR}$ | | -40 to +85 | °C |
| Data holding voltage | $V_{DH}$ | | 2.0 to 5.5 | V |
| CS data holding time | $t_{CDR}$ | Refer to the data holding timing | 2.0 min. | μs |
| Operation restoring time | $t_R$ | | | |

### Frequency characteristics and current consumption characteristics

| Item | Symbol | Condition | | Specifications | Unit |
|---|---|---|---|---|---|
| Frequency tolerance | Δf/fo | Ta=25°C $V_{DD}$=5V | 63421A/63421MA | +15/-5 (5±10) | ppm |
| | | | 63421B/63421MB | +55/-45 (5±50) | |
| | | | 63423 A | +25/-15 (5±20) | |
| | | | 63423 | +55/-45 (5±50) | |
| Frequency temperature characteristics | | -10 to +70°C (25°C reference temperature) | | +10/-120 | |
| | | -30 to +85°C (25°C reference temperature) | | +10/-220 | |
| Aging | fa | $V_{DD}$=5V, Ta=25°C, first year | | ±5 max. | ppm/Y |
| Shock resistance | S.R. | Three drops on a hard board from 75 cm or 3000G x 0.3ms x 1/2 sine wave x 3 directions | | ±10 max. | ppm |
| Current consumption | $I_{DD1}$ | $CS_1$=0V | $V_{DD}$=5V | 30max. | μA |
| | $I_{DD2}$ | | $V_{DD}$=2V | 1.8 max. | |

Unless otherwise stated, characteristics (specifications) shown in the above table are based on the rated operating temperature and voltage condition.

## Terminal connection

### RTC-63421/63421M

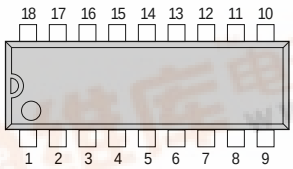


### RTC-63423

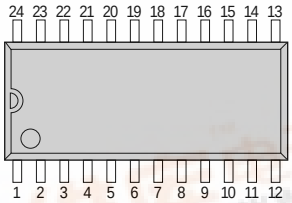


| No. | 63421/63421M | No. | 63423 |
|---|---|---|---|
| 1 | $\overline{INTERRUPT}$ | 1 | $\overline{INTERRUPT}$ |
| 2 | $\overline{CS_0}$ | 2 | $\overline{CS_0}$ |
| 3 | ALE | 3 | $\overline{ALARM}$ |
| 4 | $A_0$ | 4 | ALE |
| 5 | $A_1$ | 5 | $A_0$ |
| 6 | $A_2$ | 6 | 30sec.Adj |
| 7 | $A_3$ | 7 | $A_1$ |
| 8 | $\overline{RD}$ (E *1) | 8 | 68/$\overline{80}$ |
| 9 | GND | 9 | $A_2$ |
| 10 | $\overline{WR}$ (R/$\overline{W}$ *1) | 10 | $A_3$ |
| 11 | $D_3$ | 11 | $\overline{RD}$ (E *2) |
| 12 | $D_2$ | 12 | GND |
| 13 | $D_1$ | 13 | $\overline{WR}$(R/$\overline{W}$ *2) |
| 14 | $D_0$ | 14 | $D_3$ |
| 15 | $CS_1$ | 15 | $D_2$ |
| 16 | ($V_{DD}$) | 16 | $D_1$ |
| 17 | ($V_{DD}$) | 17 | 1Hz |
| 18 | $V_{DD}$ | 18 | $D_0$ |
| | | 19 | $CS_1$ |
| | | 20 | STOP/$\overline{START}$ |
| | | 21 | NC |
| | | 22 | ($V_{DD}$) |
| | | 23 | ($V_{DD}$) |
| | | 24 | $V_{DD}$ |

* 1=63421M * 2=Motorola bus system

- ($V_{DD}$) is to be same level as $V_{DD}$. Do not connect it to any external terminals.
- NC is not connected internally.

## External dimensions

(Unit: mm)

### RTC-63421/63421M

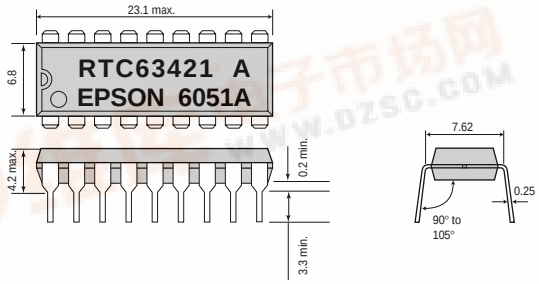


### RTC-63423

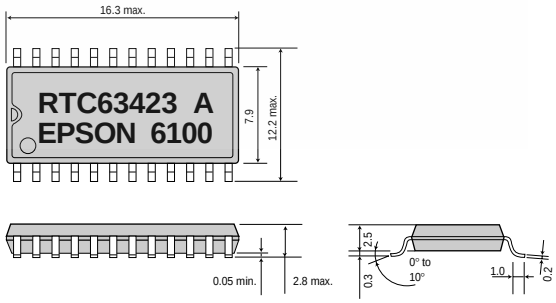


找PDF 维库一下 pdf.dzsc.com

## Data hoiding timing

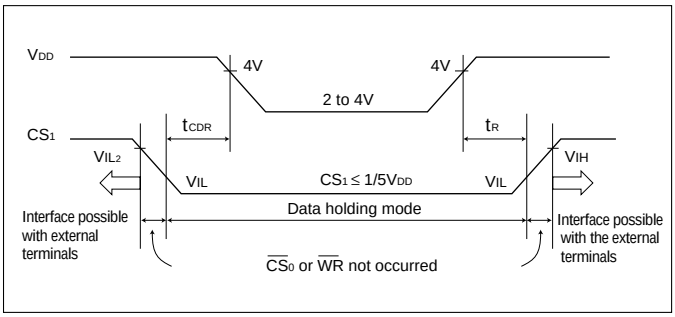


## Register table

| Address | Symbol of register | BANK 0 D3 | D2 | D1 | D0 | Real time register name |
|---|---|---|---|---|---|---|
| 0 | R-S1 | r-S8 | r-S4 | r-S2 | r-S1 | 1 - sec. digit register |
| 1 | R-S10 | * | r-S40 | r-S20 | r-S10 | 10 - sec. digit register |
| 2 | R-MI1 | r-mi8 | r-mi4 | r-mi2 | r-mi1 | 1 - min. digit register |
| 3 | R-MI10 | * | r-mi40 | r-mi20 | r-mi10 | 10 - min. digit register |
| 4 | R-H1 | r-h8 | r-h4 | r-h2 | r-h1 | 1 - hour digit register |
| 5 | R-H10 | * | r-PM/$\overline{AM}$ | r-h20 | r-h10 | 10 - hour digit register |
| 6 | R-D1 | r-d8 | r-d4 | r-d2 | r-d1 | 1 - day digit register |
| 7 | R-D10 | * | | r-d20 | r-d10 | 10 - day digit register |
| 8 | R-MO1 | r-mo8 | r-mo4 | r-mo2 | r-mo1 | 1 - month digit register |
| 9 | R-MO10 | * | | | r-mo10 | 10 - month digit register |
| A | R-Y1 | r-y8 | r-y4 | r-y2 | r-y1 | 1 - year digit register |
| B | R-Y10 | r-y80 | r-y40 | r-y20 | r-y10 | 10 - year digit register |
| C | R-W | * | r-w4 | r-w2 | r-w1 | Week register |
| D | CD | IT/PLS2 | IT/PLS1 | MASK2 | MASK1 | Control register D |
| E | CE | IRQ · FLAG0 | RESET | IRQ · FLAG2 | IRQ · FLAG1 | Control register E |
| F | CF | BANK1 BANK0 | STOP | 30 sec. ADJ | READ FLAG | Control register F |

| Symbol of register | BANK 1 D3 | D2 | D1 | D0 | Alarm register name |
|---|---|---|---|---|---|
| A-S1 | a-S8 | a-S4 | a-S2 | a-S1 | 1 - sec. digit register |
| A-S10 | * | a-S40 | a-S20 | a-S10 | 10 - sec. digit register |
| A-MI1 | a-mi8 | a-mi4 | a-mi2 | a-mi1 | 1 - min. digit register |
| A-MI10 | * | a-mi40 | a-mi20 | a-mi10 | 10 - min. digit register |
| A-H1 | a-h8 | a-h4 | a-h2 | a-h1 | 1 - hour digit register |
| A-H10 | * | a-PM/$\overline{AM}$ | a-h20 | a-h10 | 10 - hour digit register |
| A-D1 | a-d8 | a-d4 | a-d2 | a-d1 | 1 - day digit register |
| A-D10 | * | | a-d20 | a-d10 | 10 - day digit register |
| A-MO1 | a-mo8 | a-mo4 | a-mo2 | a-mo1 | 1 - month digit register |
| A-MO10 | * | | | a-mo10 | 10 - month digit register |
| A-W | * | r-w4 | a-w2 | a-w1 | Week register |
| A-EMB | ae8 | ae4 | ae2 | ae1 | Area define register |
| CC | * | | TEST2 | TEST1 | Test register |
| CD | * | CY2 | CY1 | CY0 | Control register D |
| CE | HD/SFT | 24/$\overline{12}$ | CAL | D · P | Control register E |
| CF | Same as BANK 0 | | | | Control register F |

## Switching characteristics

Motorola bus system (VDD = 5V ± 0.5V, Ta = 0 to + 70°C)

| Item | Symbol | Min. | Max. | Unit |
|---|---|---|---|---|
| R/$\overline{W}$, address setup time | tRWE | 100 | — | ns |
| E "H" pulse width | tEHW | 220 | | |
| R/$\overline{W}$, address hold time | tERW | 20 | | |
| E "L" pulse width | tELW | 220 | | |
| E cycle time | tEC | 500 | | |
| DATA setup time | tDS | 180 | | |
| DATA hold time | tDH | 20 | | |
| E to data (CL=150pF) | tRD | — | 120 | |
| Data hold | tED | 10 | — | |

Switching characteristics on the Intel bus system are the same as those for the RTC-6242 series.

## Write mode

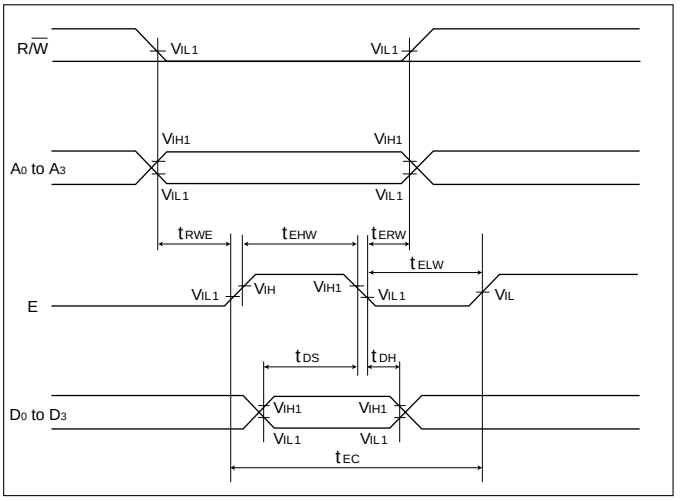

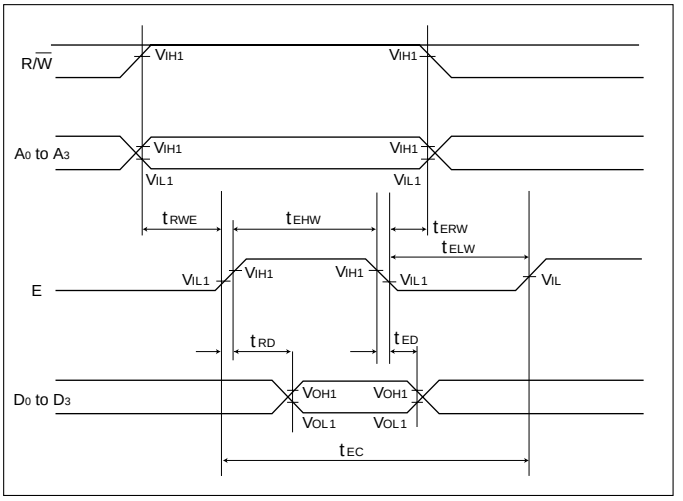
## Read mode