TOSHIBA RF POWER AMPLIFIER MODULE

S-AV17

VHF 50W FM RF POWER AMPLIFIER MODULE

HAM Application

Unit in mm

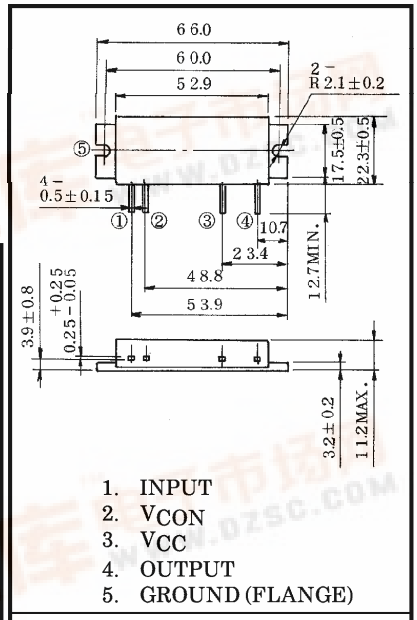

1. INPUT
2. V_{CON}
3. V_{CC}
4. OUTPUT
5. GROUND (FLANGE)

JEDEC	—
EIAJ	—
TOSHIBA	5-53L

Weight : 35g

MAXIMUM RATINGS (Tc = 25°C)

CHARACTERISTIC		SYMBOL	RATING	UNIT
DC Supply Voltage		V_{CC}	16	V
DC Supply Voltage		V_{CON}	16	V
Total Current		I_T	14	A
Input Power		Pi	600	mW
Output Power	@ 12.5V < V_{CC} ≦ 16V V_{CON} ≦ 12.5V Pi = 400mW $Z_G = Z_L = 50\Omega$	Po	65	W
Operating Case Temperature Range		$T_{c\,(opr)}$	−30~100	°C
Storage Temperature Range		T_{stg}	−40~110	°C

ELECTRICAL CHARACTERISTICS (Tc = 25°C)

CHARACTERISTIC	SYMBOL	TEST CONDITION	MIN.	TYP.	MAX.	UNIT
Frequency Range	f_{range}	—	144	—	148	MHz
Output Power	Po	Pi = 400mW $V_{CC} = V_{CON} = 12.5V$ $Z_G = Z_L = 50\Omega$	60	—	—	W
Power Gain	G_p		21.7	—	—	dB
Total Efficiency	η_T		45	—	—	%
Input VSWR	VSWRin		—	1.5	2.0	—
Harmonics	HRM		—	−30	−25	dB
Load Mismatch	—	Po = 60W (V_{CON} = adjust) V_{CC} = 15V Pi = 400mW VSWR load 20 : 1 all phase	No Degradation			—
Stability	—	V_{CC} = 12.5V V_{CON} = 0~12.5V Pi = 400mW VSWR load 3 : 1 all phase	All spurious output than 60dB below desired signal			—

CAUTION

- This product has intersetting cap. Please pay attention for exceeding stress and foreign matter in your application. And not to take away the cap.
- Beryllia Ceramics is used in this product. The dust or vapor can be dangerous to humans. Do not break, cut, crush or dissolve chemically. Dispose of this product properly according to law. Do not intermingle with normal industrial or domestic waste.

961001EAA2

SCHEMATIC

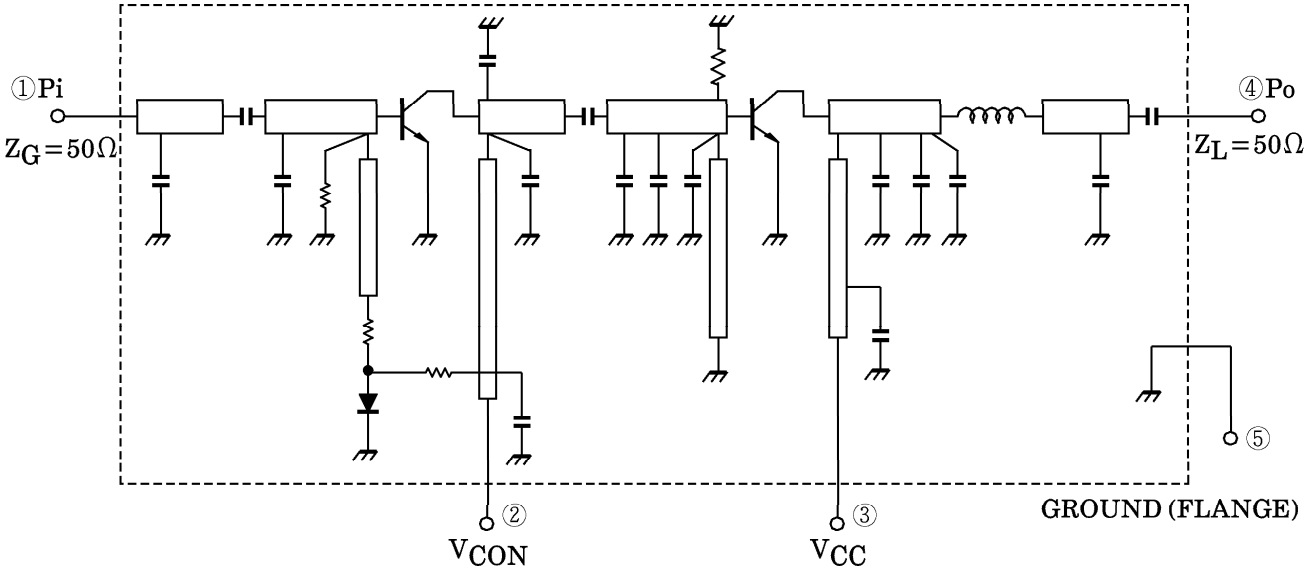

TEST FIXTURE

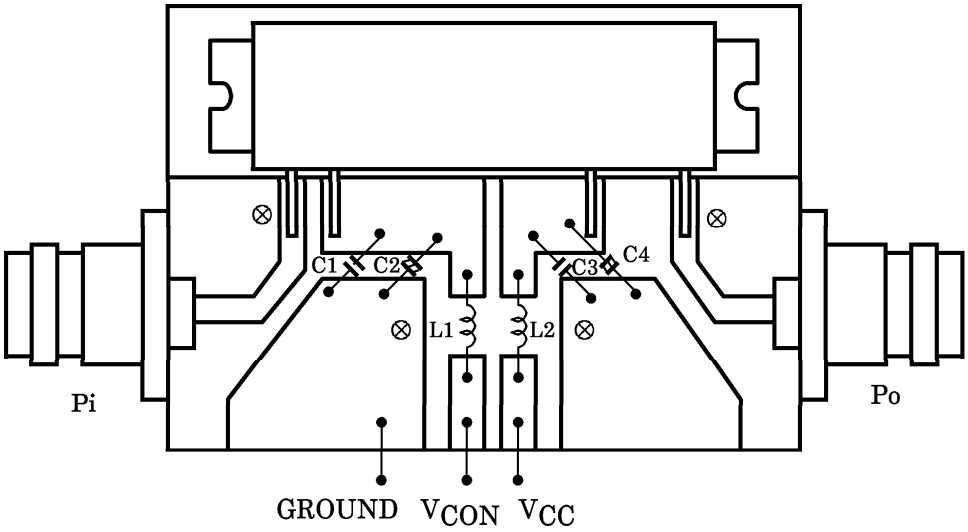

C1, C3 : 1500pF
C2, C4 : 10μF
L1, L2 : ϕ0.8ENAMEL WIRE, 8T, 5ID

961001EAA2'

Po, η_T, VSWRin – f

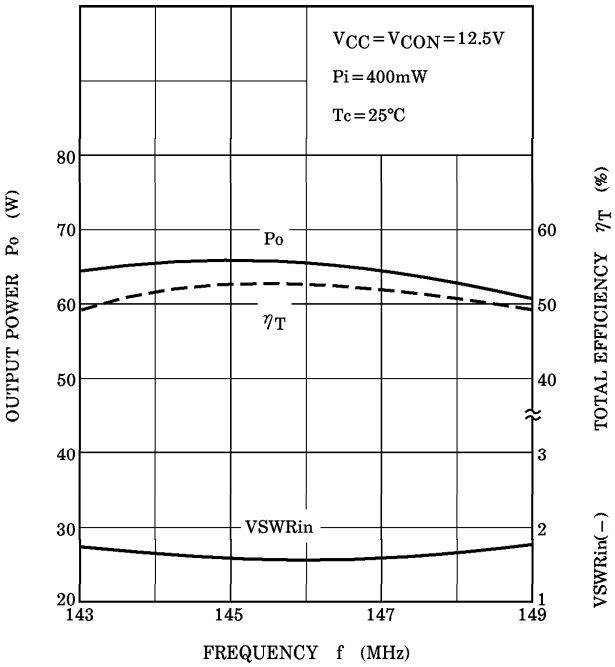

Po, η_T, VSWRin – Pi

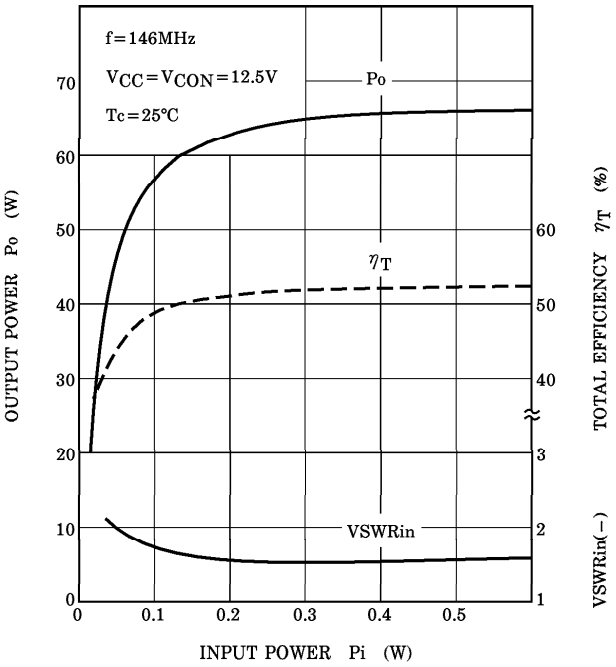

Po, η_T, VSWRin – V_{CON}

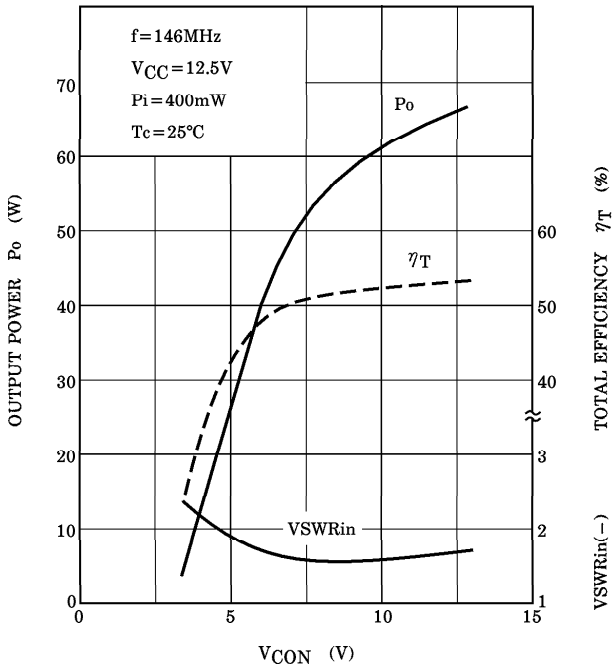

Po, η_T, VSWRin – V_{CC}, V_{CON}

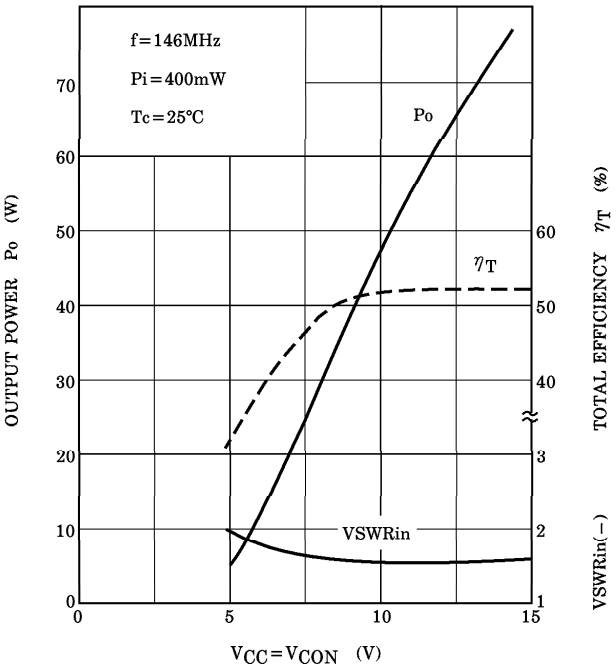

CAUTION

These are only typical curves and devices are not necessarily guaranteed at these curves.