查询S8855供应商 捷多邦，专业PCB打样工厂，24小时加急出货

TOSHIBA

MICROWAVE SEMICONDUCTOR

TECHNICAL DATA

MICROWAVE POWER GaAs FET

S8855

FEATURES:

- HIGH POWER
  P_{1dB} = 31.5 dBm at f = 15 GHz
- HIGH GAIN
  G_{1dB} = 6.5 dB at f = 15 GHz
- SUITABLE FOR Ku-BAND AMPLIFIER
- ION IMPLANTATION

RF PERFORMANCE SPECIFICATIONS (Ta = 25°C)

TYPE NUMBER (PACKAGE CODE)				S8855 (2-4J1B)		
CHARACTERISTIC	SYMBOL	CONDITION	UNIT	MIN.	TYP.	MAX.
Output Power at 1dB Compression Point	P_{1dB}	V_{DS}= 10V f = 15GHz	dBm	30.5	31.5	-
Power Gain at 1dB Compression Point	G_{1dB}		dB	5.5	6.5	-
Drain Current	I_{DS}		A	-	0.48	0.7
Power Added Efficiency	η_{add}		%	-	23	-

ELECTRICAL CHARACTERISTICS (Ta = 25°C)

TYPE NUMBER (PACKAGE CODE)				S8855 (2-4J1B)		
CHARACTERISTIC	SYMBOL	CONDITION	UNIT	MIN.	TYP.	MAX.
Trans-conductance	g_m	V_{DS}=3V I_{DS}=0.5A	mS	-	300	-
Pinch-off Voltage	V_{GSoff}	V_{DS}=3V I_{DS}=15mA	V	-2.5	-3.5	-5
Saturated Drain Current	I_{DSS}	V_{DS}=3V V_{GS}=0V	A	-	1.0	1.3
Gate to Source Breakdown Voltage	V_{GSO}	I_{GS}=-15μA	V	-5	-	-
Thermal Resistance	$R_{th(c-c)}$	Channel to case	°C/W	-	10	16.7

★ The information contained herein is presented only as a guide for the applications of our products. No responsibility is assumed by TOSHIBA for any infringements of patents or other rights of the third parties which may result from its use. No license is granted by implication or otherwise under any patent or patent rights of TOSHIBA or others.

★ The information contained herein may be changed without prior notice. It is therefore advisable to contact TOSHIBA before proceeding with the design of equipment incorporating this product.

找PDF 维库一下 pdf.dzsc.com

ABSOLUTE MAXIMUM RATINGS (Ta = 25°C)

TYPE NUMBER (PACKAGE CODE)			S8855 (2-4J1B)
CHARACTERISTIC	SYMBOL	UNIT	RATING
Drain-Source Voltage	V_{DS}	V	15
Gate-Source Voltage	V_{GS}	V	-5
Drain Current	I_D	A	1.3
Total Power Dissipation (Tc=25°C)	P_T	W	9
Channel Temperature	T_{ch}	°C	175
Storage Temperature	T_{stg}	°C	-65 ∿ 175

PACKAGE OUTLINE (2-4J1B)

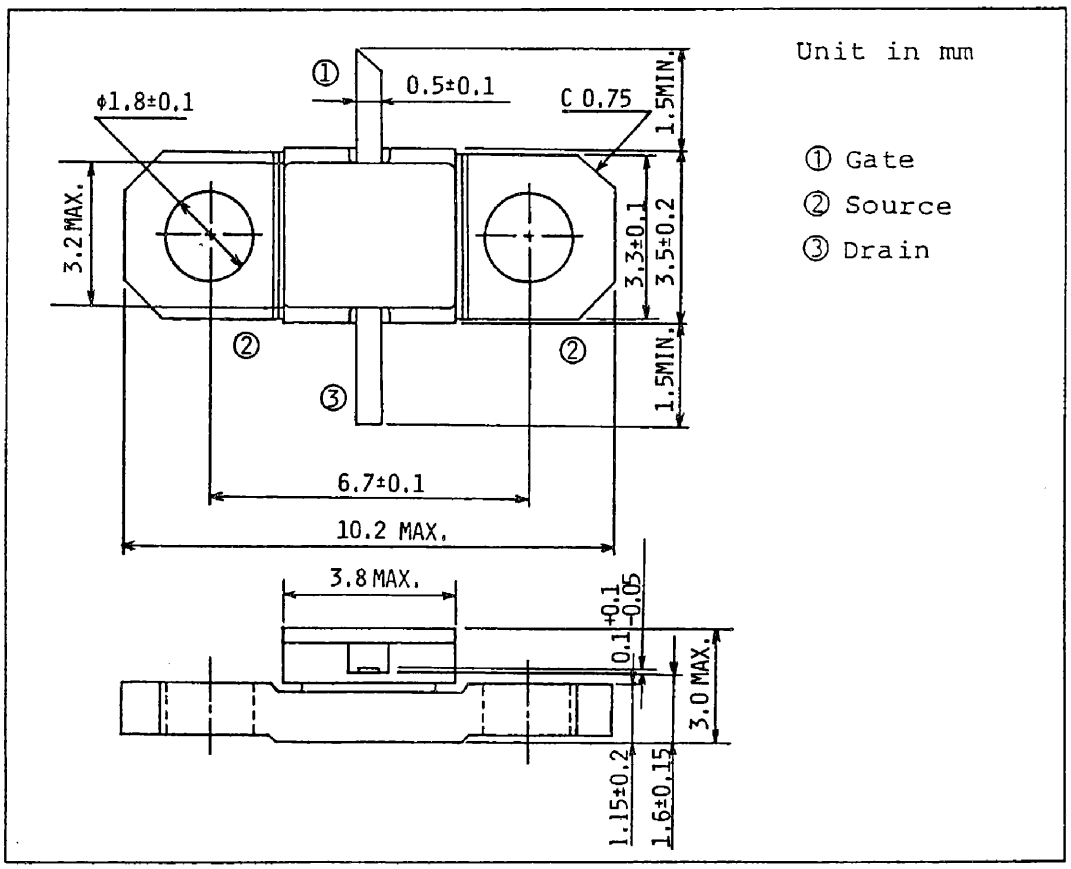

HANDLING PRECAUTIONS FOR PACKAGED TYPE

Soldering iron should be grounded and the operating time should not exceed 10 seconds at 260°C.

OUTPUT POWER CHARACTERISTIC

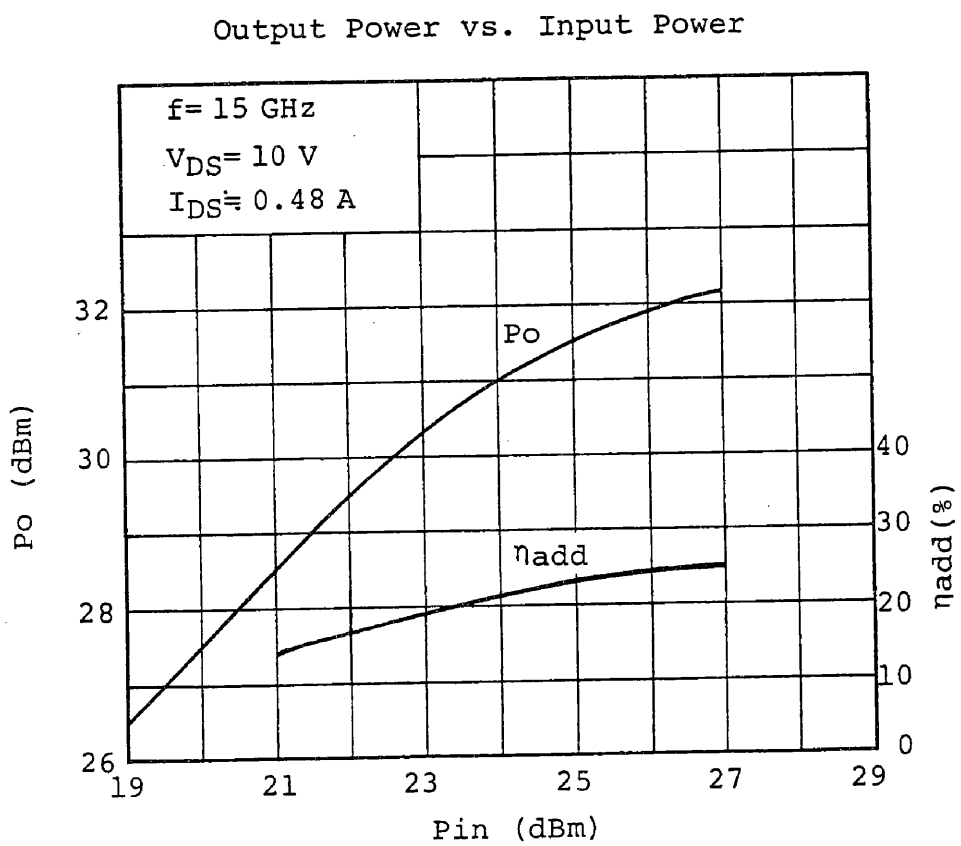

POWER DISSIPATION VS. CASE TEMPERATURE

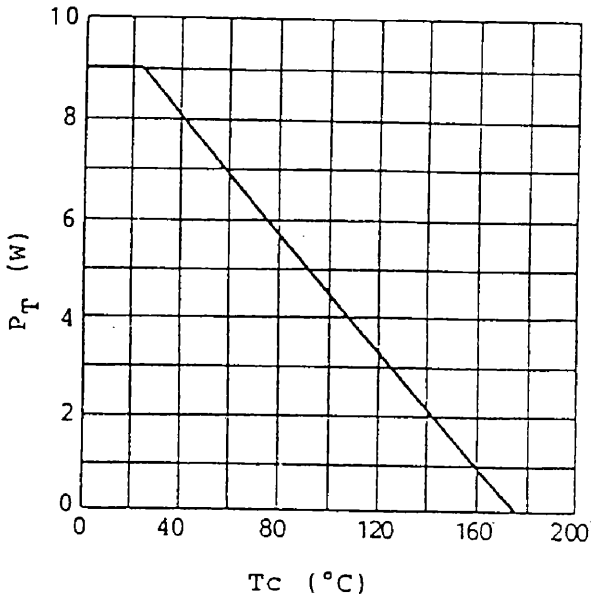

DRAWING OF MATCHING NETWORK FOR S8855

Unit in mm

(f = 15 GHz)

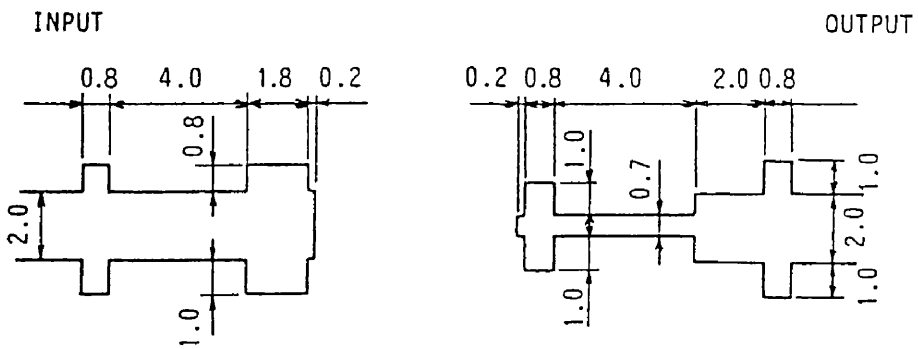

ε_r=2.6 (Teflon Glass)
t=0.7 mm

S8855 S-PARAMETERS
(MAGN. and ANGLES)

V_{DS} = 10 V, I_{DS} = 400 mA

f = 8-18 GHz

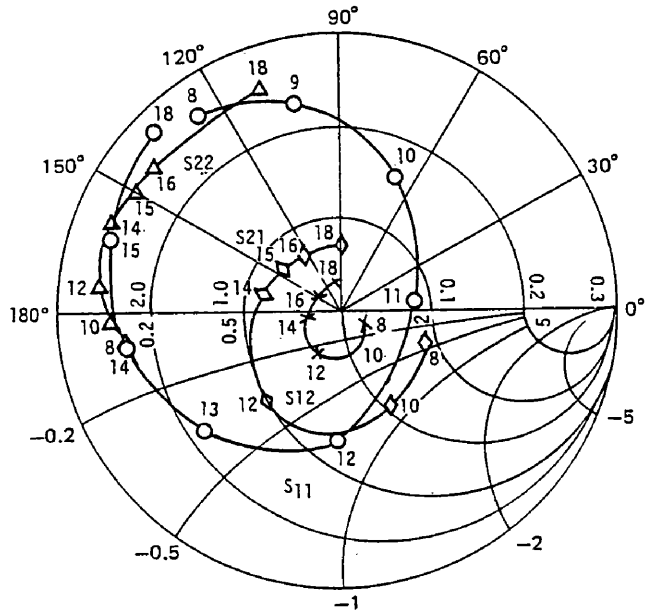

FREQUENCY (GHz)	S_{11}		S_{12}		S_{21}		S_{22}	
8	0.85	126	0.031	-32	0.95	-21	0.77	-172
9	0.75	102	0.035	-45	1.05	-43	0.80	-174
10	0.51	69	0.042	-60	1.13	-63	0.82	-177
11	0.27	6	0.051	-83	1.35	-94	0.86	178
12	0.41	-93	0.052	-119	1.24	-131	0.87	174
13	0.65	-140	0.044	-148	1.01	-163	0.87	168
14	0.77	-170	0.039	-173	0.85	171	0.86	159
15	0.86	162	0.031	162	0.75	146	0.84	150
16	0.87	154	0.027	147	0.70	126	0.82	142
17	0.90	144	0.029	129	0.66	107	0.81	131
18	0.91	136	0.032	100	0.64	94	0.82	110