提供9013原厂供应商

SOT-23 Plastic-Encapsulate Transistors

现货热卖，多规格型号齐全，24小时加急出货

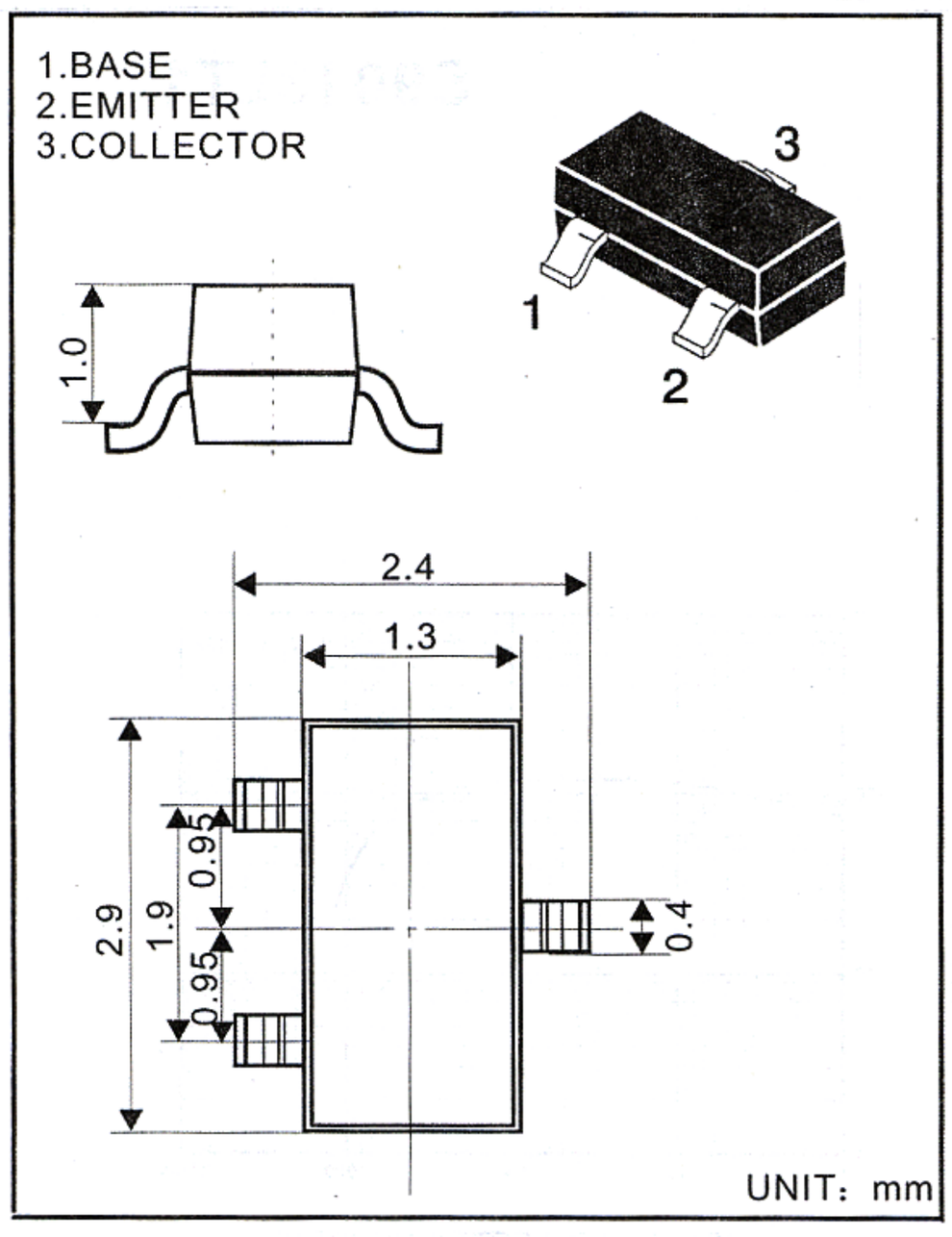

S9013LT1 TRANSISTOR (NPN)

FEATURES

Power dissipation

P_{CM}: 0.3 W (Tamb=25℃)

Collector current

I_{CM}: 0.5 A

Collector-base voltage

$V_{(BR)CBO}$:40V

Operating and storage junction temperature range

T_J, T_{stg} :-55℃ to+150℃

ELECTRICAL CHARACTERISTICS

(Tamp=25℃ unless otherwise specified)

Parameter	Symbol	Test conditions	MIN	TYP	MAX	UNIT
Collector-base breakdown voltage	$V_{(BR)CBO}$	I_C=100μA, I_E=0	40			V
Collector-emitter breakdown voltage	$V_{(BR)CEO}$	I_C=0.1mA, I_B=0	25			V
Emitter-base breakdown voltage	$V_{(BR)EBO}$	I_E=100μA, I_C=0	5			V
Collector cut-off current	I_{CBO}	V_{CB}=40V, I_E=0			0.1	μA
	I_{CEO}	V_{CE}=20V, I_B=0			0.1	μA
Emitter cut-off current	I_{EBO}	V_{EB}=5V, I_C=0			0.1	μA
DC current gain	$h_{FE(1)}$	V_{CE}=1V, I_C=50mA	120		350	
	$h_{FE(2)}$	V_{CE}=1V, I_C=500mA	40			
Collector-emitter saturation voltage	V_{CEsat}	I_C=500mA, I_B=50mA			0.6	V
Base-emitter saturation voltage	V_{BEsat}	I_C=500mA, I_B=50mA			1.2	V
Base-emitter voltage	V_{BEF}	I_E=100mA			1.4	V
Transition frequency	f_T	V_{CE}=6V, I_C=20mA f=30MHz	150			MHz

CLASSIFICATION OF $h_{FE(1)}$

Rank	L	H
Range	120-200	200-350

DEVICE MARKING : S9013LT1=J3

找PDF 维库一下 pdf.dzsc.com

Typical Characteristics

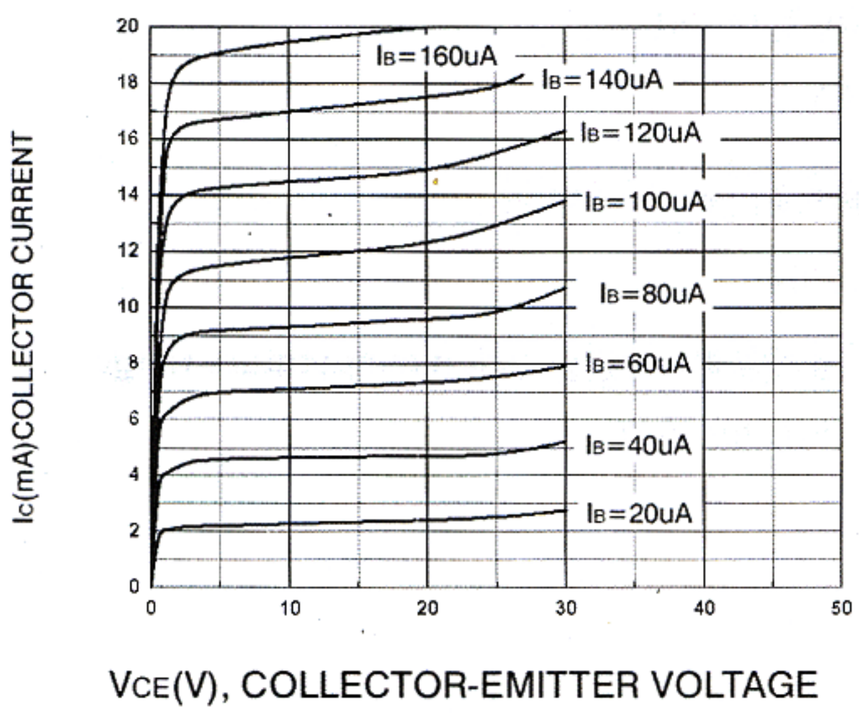

Static Characteristic

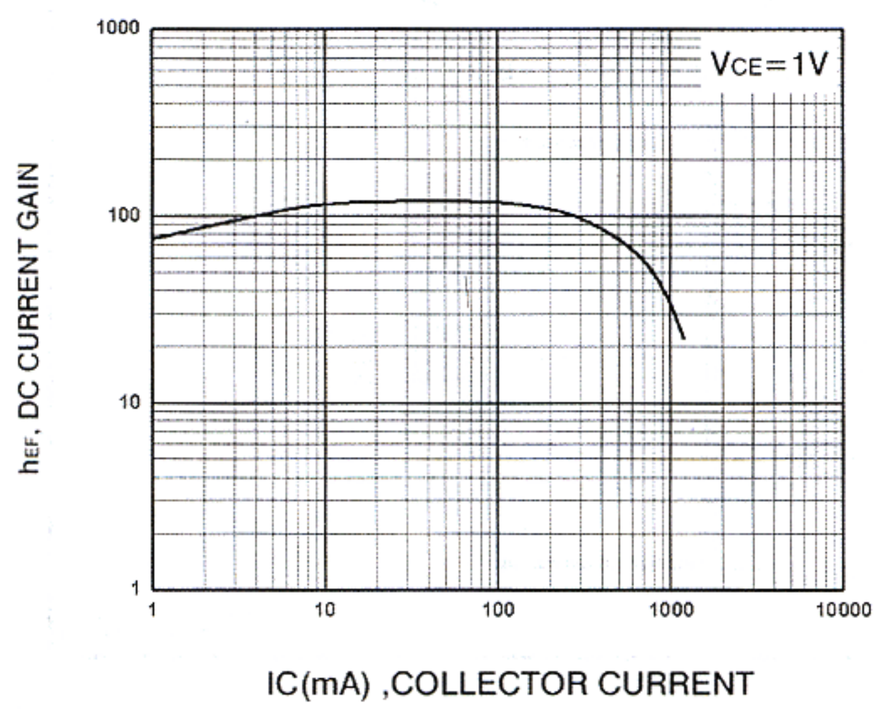

DC current Gain

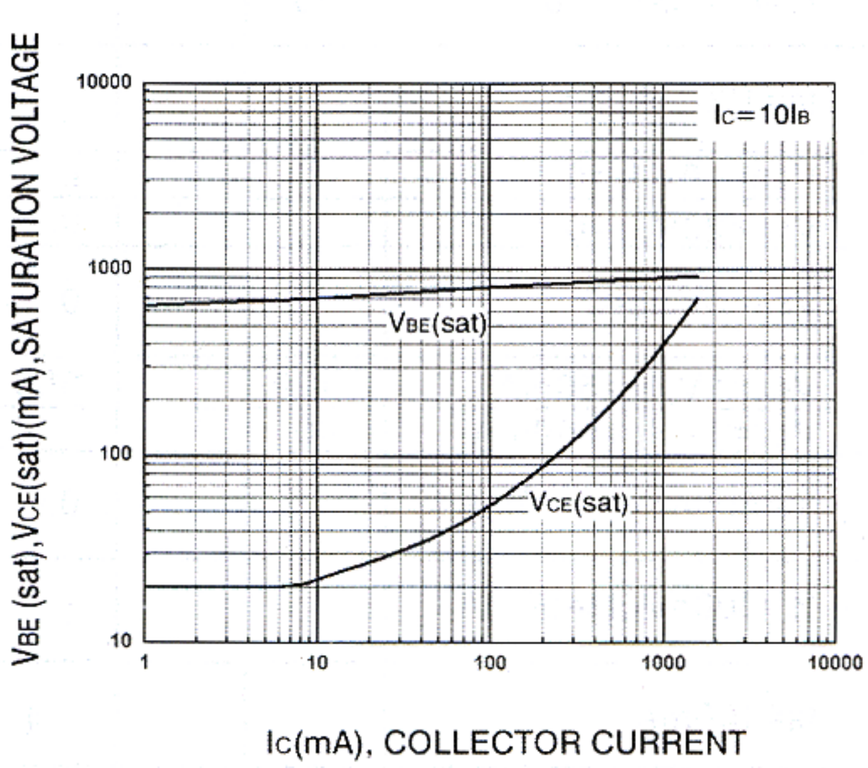

Base-Emitter Saturation Voltage
Collector-Emitter Saturation Voltage

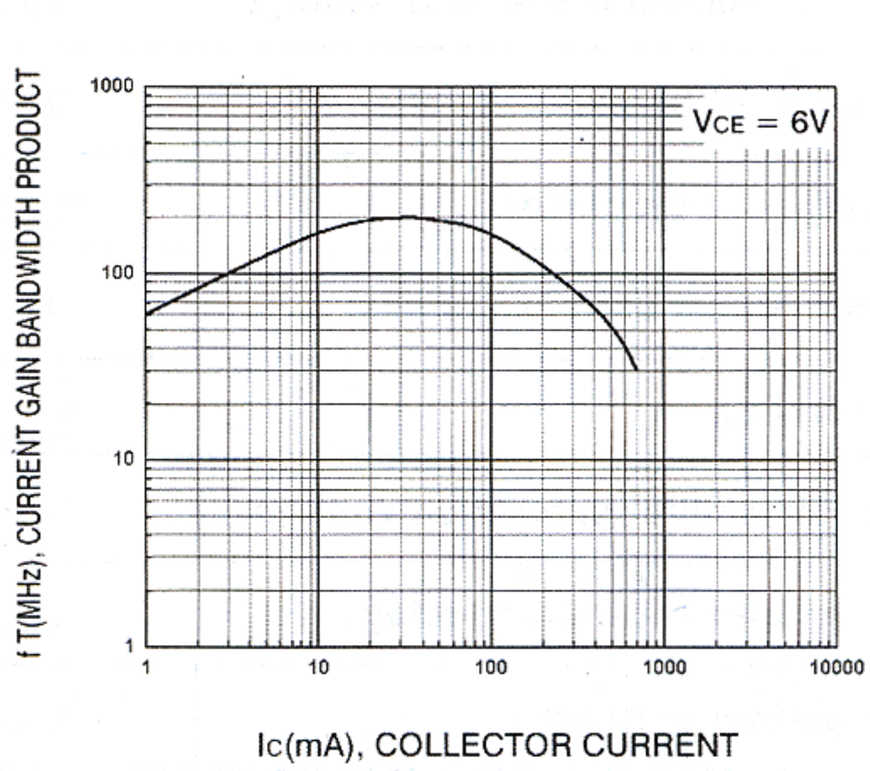

Current Gain Bandwidth Product