查询SAA1310供应商 捷多邦，专业PCB打样工厂，24小时加急出货

INTEGRATED CIRCUITS

DATA SHEET

SAA1310
Control interface for VHS video recorders

Product specification
File under Integrated Circuits, IC02

April 1995

找PDF 维库一下 pdf.dzsc.com

Philips Semiconductors

PHILIPS

Control interface for VHS video recorders

SAA1310

FEATURES

- Full support of VISS and VASS mode (VHS Index/Address Search System)
- Read, write and overwrite of Tape Control/head signal (CTL)
- Power-ON and power-failure indicator
- 4 general purpose comparators for interface between sensors and microprocessor
- 2 comparators have a 100 mA output driver
- PAL and NTSC compatible

GENERAL DESCRIPTION

The SAA1310 provides an interface between the tape control head in the VHS deck-electronics.
The circuit also includes an interface between sensors in the deck mechanics and the microprocessor.

ORDERING INFORMATION

EXTENDED TYPE NUMBER	PACKAGE			
	PINS	PIN POSITION	MATERIAL	CODE
SAA1310	18	DIL	plastic	SOT102 (1)
SAA1310T	20	SO	plastic	SOT163A (2)

Note

1. SOT102-1; 1996 December 02.
2. SOT163-1; 1996 December 02.

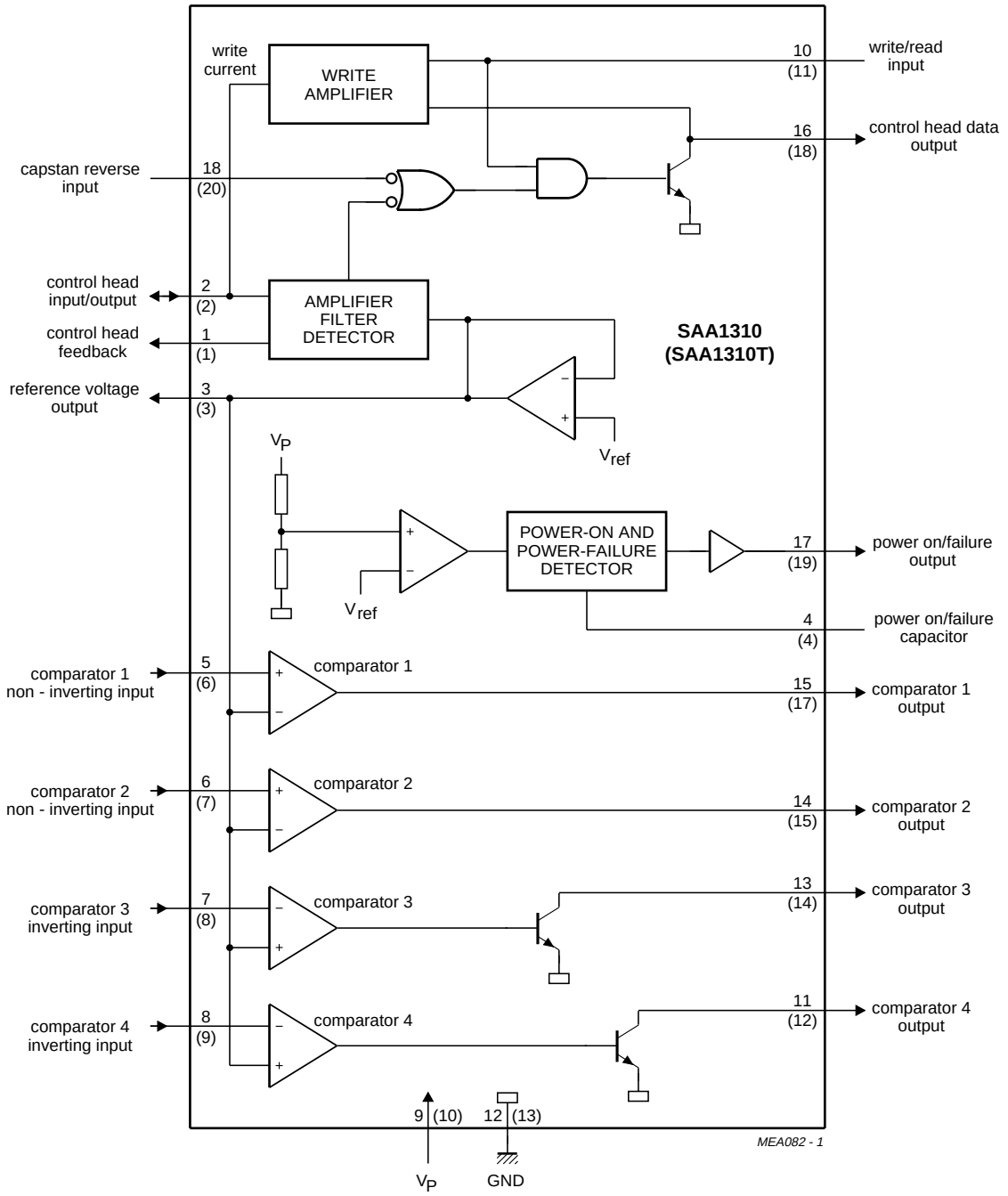

Pin numbers in parenthesis refer to the SAA1310T.

Fig.1 Block diagram.

PIN CONFIGURATION

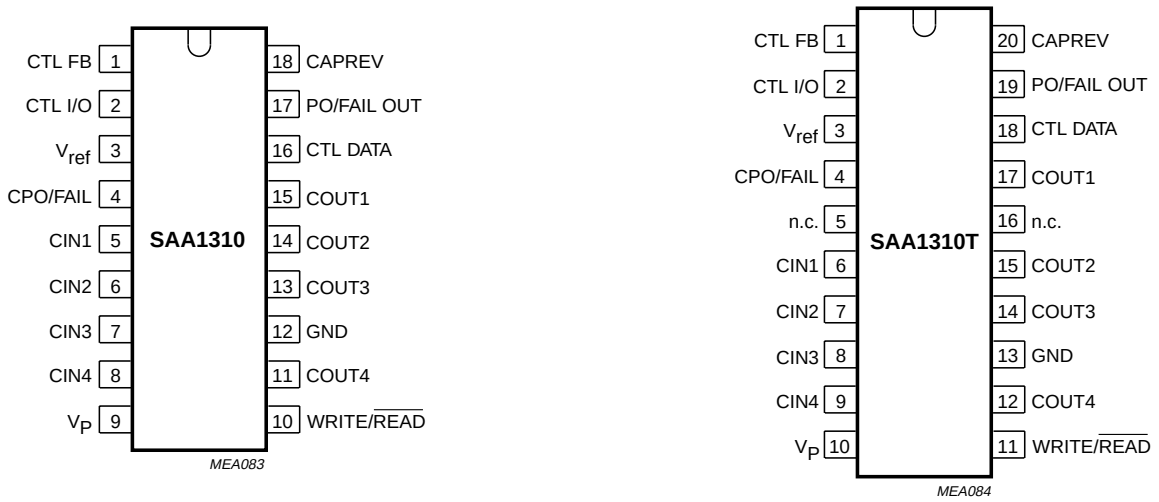

a. SAA1310.

b. SAA1310T.

Fig.2 Pin configurations.

PINNING (pins in parenthesis refer to SAA1310T)

SYMBOL	PIN		DESCRIPTION
CTL FB	1	(1)	control head feedback
CTL I/O	2	(2)	control head input/output
V_{ref}	3	(3)	reference voltage output
CPO/FAIL	4	(4)	power on/failure capacitor
CIN1	5	(6)	comparator 1 input
CIN2	6	(7)	comparator 2 input
CIN3	7	(8)	comparator 3 input
CIN4	8	(9)	comparator 4 input
V_P	9	(10)	supply voltage
WRITE/$\overline{\text{READ}}$	10	(11)	write/read input
COUT4	11	(12)	comparator 4 output
GND	12	(13)	ground
COUT3	13	(14)	comparator 3 output
COUT2	14	(15)	comparator 2 output
COUT1	15	(17)	comparator 1 input
CTL DATA	16	(18)	control head data output
PO/FAIL OUT	17	(19)	power on/failure output
CAPREV	18	(20)	capstan reverse input

LIMITING VALUES (PIN NUMBERS IN PARENTHESIS REFER TO SAA1310T)

In accordance with the Absolute Maximum System (IEC 134)

SYMBOL	PARAMETER	CONDITIONS	MIN.	MAX.	UNIT
V_P	supply voltage range		0	6.0	V
V_I/V_O	voltage on all pins	except pins 11 (12) and 13 (14)	0	V_P	V
V_O	output voltage on pins 11 (12) and 13 (14)		0	18	V
T_{stg}	storage temperature range		–65	+150	°C
T_{amb}	ambient temperature range		0	+70	°C

THERMAL RESISTANCE

SYMBOL	PARAMETER	TYP.	MAX.	UNIT
R_{th}	thermal resistance (SAA1310)	75	–	K/W
R_{th}	thermal resistance (SAA1310T)	90	–	K/W

CHARACTERISTICS (PIN NUMBERS IN PARENTHESIS REFER TO SAA1310T)

V_P = 5 V; T_{amb} = 25 °C; all voltage referenced to pin 12 (13); according to the test set-up (see Fig.4); unless otherwise specified

SYMBOL	PARAMETER	CONDITION	MIN.	TYP.	MAX.	UNIT
P_d	power dissipation	note 1	–	85	–	mW
Supply pin 9 (10)						
V_P	supply voltage		4.5	5.0	5.5	V
I_P	supply current	read mode	10	15	20	mA
		write mode; duty factor = 50%	13	18	24	mA
CTL I/O pin 2 (2)						
READ MODE PIN 10 (11) < 0.5 V						
V_I	input voltage (peak-to-peak value)	f = 500 Hz	0.35	–	–	mV
		f = 30 kHz; non-linear operation	–	–	200	mV
B	bandwidth low-pass filter		–	3	–	kHz
I_b	input bias current	read mode	–	0.1	–	µA
WRITE MODE PIN 10 (11) > 3.5 V						
V_O	output voltage LOW	$I_{CTL\ I/O}$ = 3 mA; pin CTL DATA = HIGH	–	–	0.4	V
V_O	output voltage HIGH	$I_{CTL\ I/O}$ = – 3 mA; pin CTL DATA = LOW	4.6	–	–	V
WRITE/$\overline{\text{READ}}$ pin 10 (11)						
V_I	input voltage	read mode	–	–	0.5	V
		write mode; analog	1.6	–	3.3	V
I_I	input current	read mode	–	– 1.5	–	µA
		write mode	–	0.1	–	µA
V_{ref} pin 3 (3); note 2						
V_O	output voltage		2.4	2.5	2.6	V
I_{tot}	total current	including write current	–4	–	+ 4	mA
R_O	output resistance		–	0.4	0.6	Ω
CAPREV pin 18 (20)						
V_{IH}	input voltage HIGH		2.0	–	–	V
V_{IL}	input voltage LOW		–	–	0.8	V
I_{IH}	input current HIGH	V_{CAPREV} = 5 V	–	–	10	µA
I_{IH}	input current LOW	V_{CAPREV} = 0 V	–10	–	–	µA

SYMBOL	PARAMETER	CONDITION	MIN.	TYP.	MAX.	UNIT
CTL DATA pin 16 (18)						
WRITE MODE						
V_{IH}	input voltage HIGH		2.0	–	–	V
V_{IL}	input voltage LOW		–	–	0.8	V
I_{IH}	input current HIGH	$V_{CTL\ DATA}$ = 5 V	–	–	10	µA
I_{IL}	input current LOW	$V_{CTL\ DATA}$ = 0 V	–10	–	–	µA
READ MODE						
V_{OL}	output voltage LOW	I_{OL} = 0.5 mA	–	–	0.4	V
V_{OH}	output voltage HIGH	I_{OH} = – 50 µA	2.4	–	–	V
CPO/FAIL and PO/FAIL OUT pin 4 (4) and 17 (19); see Fig.3						
V_O	operating voltage range	at decreasing V_P	1.5	–	5.5	V
V_{OL}	output voltage LOW	I_{OL} = 1 mA	–	–	0.4	V
V_{OH}	output voltage HIGH	I_{OH} = 1 mA	V_P – 0.9	–	–	V
t_d	delay time	C_{CAPREV} = 68 nF	–	50	–	ms
V_{TL1}	threshold level 1		4.5	–	4.8	V
V_{TL2}	threshold level 2		–	3.5	–	V
I_O	source current pin 4		–	–3	–	µA
I_O	sink current pin 4		–	300	–	µA
$V_{O(min.)}$	minimum output voltage		–	20	–	mV
$V_{O(max.)}$	maximum output voltage		–	2.1	–	V
High output current type comparators						
CIN3 and CIN4 pins 7 (8) and 8 (9)						
V_{hys}	input hysteresis		–	10	–	mV
V_{IL}	input voltage LOW		–	–	V_{ref} – 10 mV	V
V_{IH}	input voltage HIGH		V_{ref} + 10 mV	–	–	V
I_{IL}	input current LOW	CIN3 = CIN4 = 0 V	–1	–	–	µA
I_{IH}	input current HIGH	CIN3 = CIN4 = V_P	–	–	+ 1	µA
COUT3 and COUT4 pins 13 (14) and 11 (12)						
V_{OL}	output voltage LOW	I_{OL} = 100 mA	–	–	1.0	V
		I_{OL} = 2 mA	–	–	0.4	V
$\pm I_{OL}$	leakage current	output voltage HIGH; COUT3 = COUT4 = 17 V	–	–	1	µA
t_{tr}	transient time	note 3	–	0.5	–	µs
T_j	thermal protection		–	130	–	°C

SYMBOL	PARAMETER	CONDITION	MIN.	TYP.	MAX.	UNIT
Low output current type comparators						
CIN1 AND CIN2 pins 5 (6) and 6 (7)						
V_{hys}	input hysteresis		–	10	–	mV
V_{IL}	input voltage LOW		–	–	V_{ref} – 10 mV	V
V_{IH}	input voltage HIGH		V_{ref} + 10 mV	–	–	V
I_I	input current	CIN1 = CIN2 = 0 V	–1	–	–	μ A
		CIN1 = CIN2 = V_P	–	–	+1	μ A
COUT1 AND COUT2 pins 15 (17) and 14 (15)						
V_{OL}	output voltage HIGH	I_{OH} = –100 μA	4.5	–	–	V
V_{OH}	output voltage LOW	I_{OL} = 2 mA	–	–	1	V
t_{tr}	transient time	note 4	–	0.5	–	μ s

Notes to the characteristics

1. Without the sink current of the comparators; in write mode.
2. Minimum value of capacitor connected to this pin is 4.7 μF.
3. V_i = 100 mV p-p. Inputs connected to V_{ref} via a 10 kΩ resistor; outputs connected to V_P via a 250 Ω resistor.
4. V_i = 100 mV p-p. Inputs connected to V_{ref} via a 10 kΩ resistor; outputs connected to V_P via a 2.5 kΩ resistor.

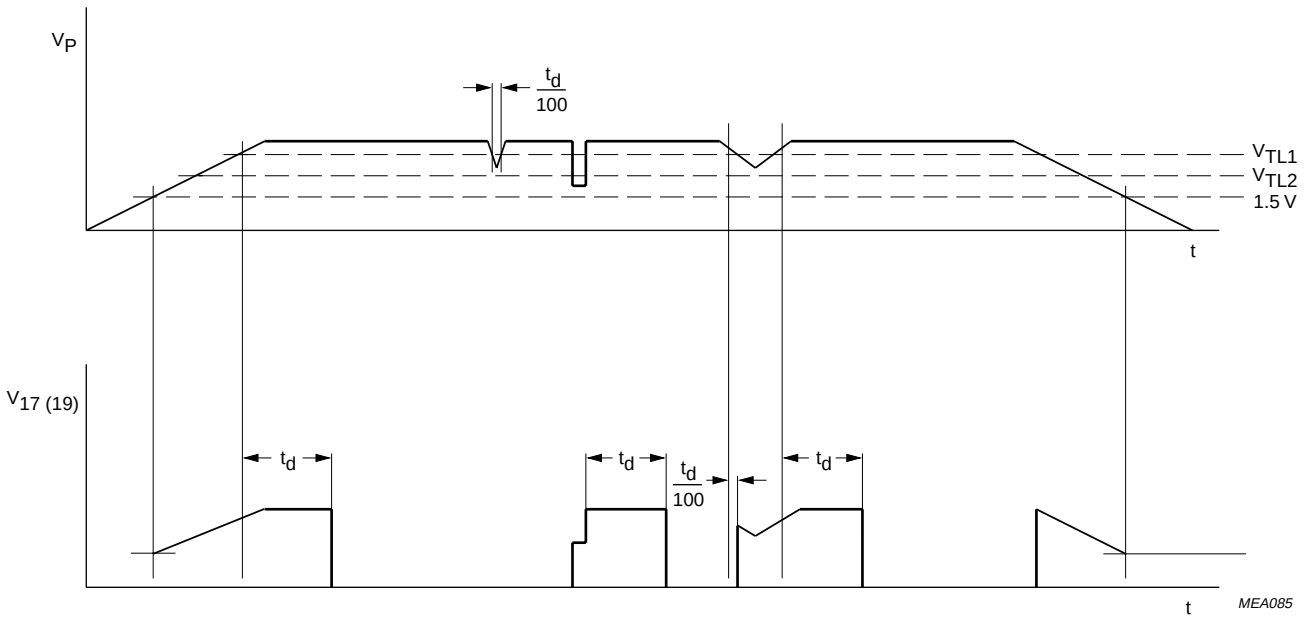

Fig.3 Power-ON and power-failure detector.

APPLICATION INFORAMTION

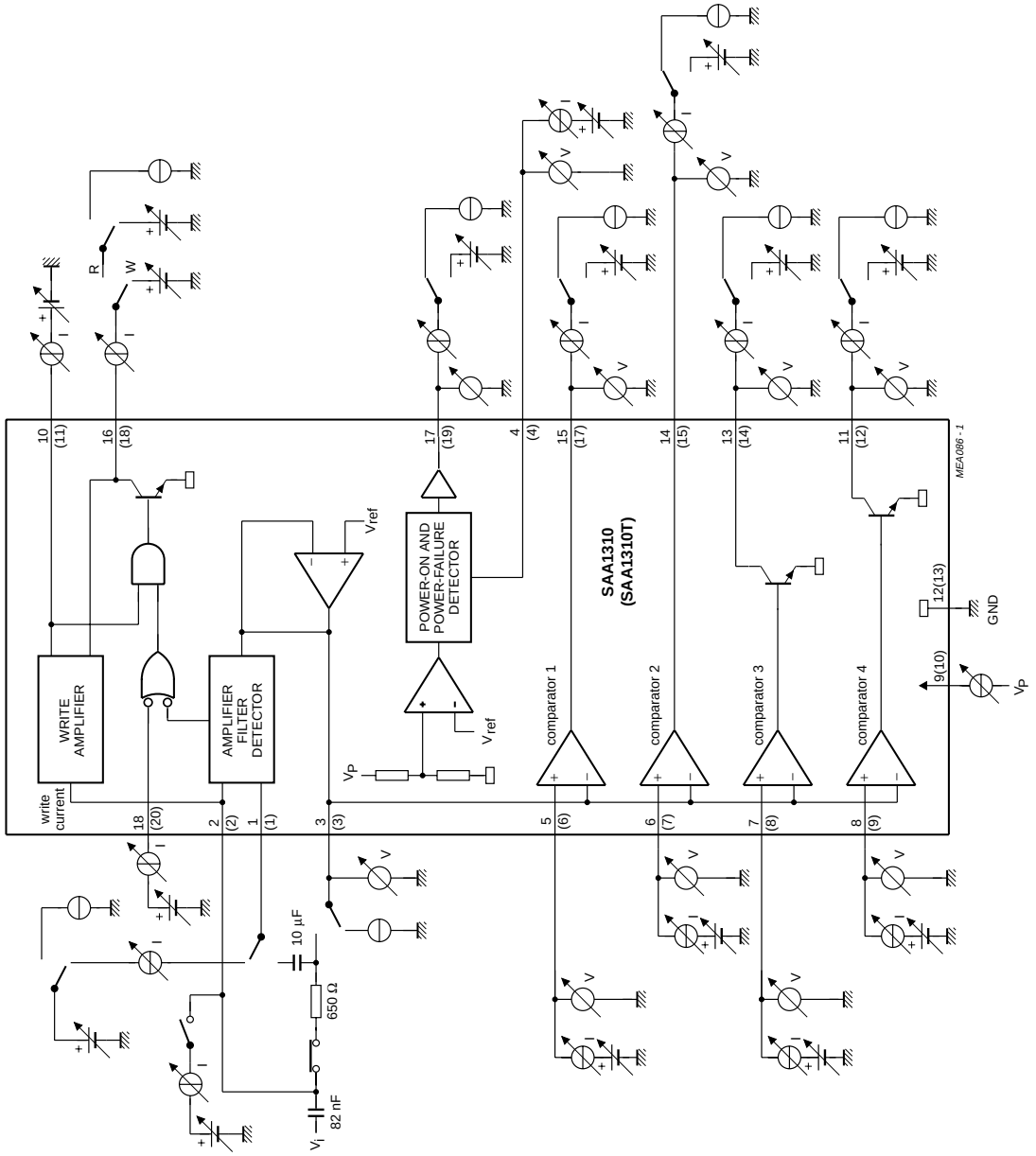

Fig.4 Test circuit diagram.

Pin numbers in parenthesis refer to the SAA1310T.

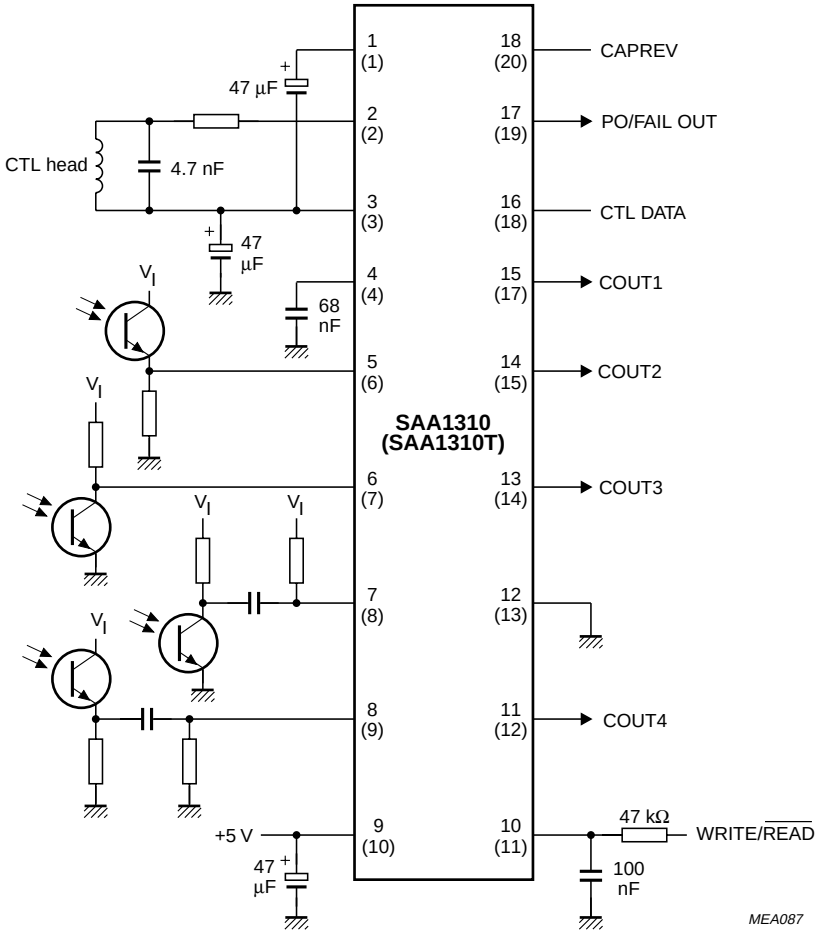

Pin numbers in parenthesis refer to the SAA1310T.

Fig.5 Application diagram.

PACKAGE OUTLINES

DIP18: plastic dual in-line package; 18 leads (300 mil) SOT102-1

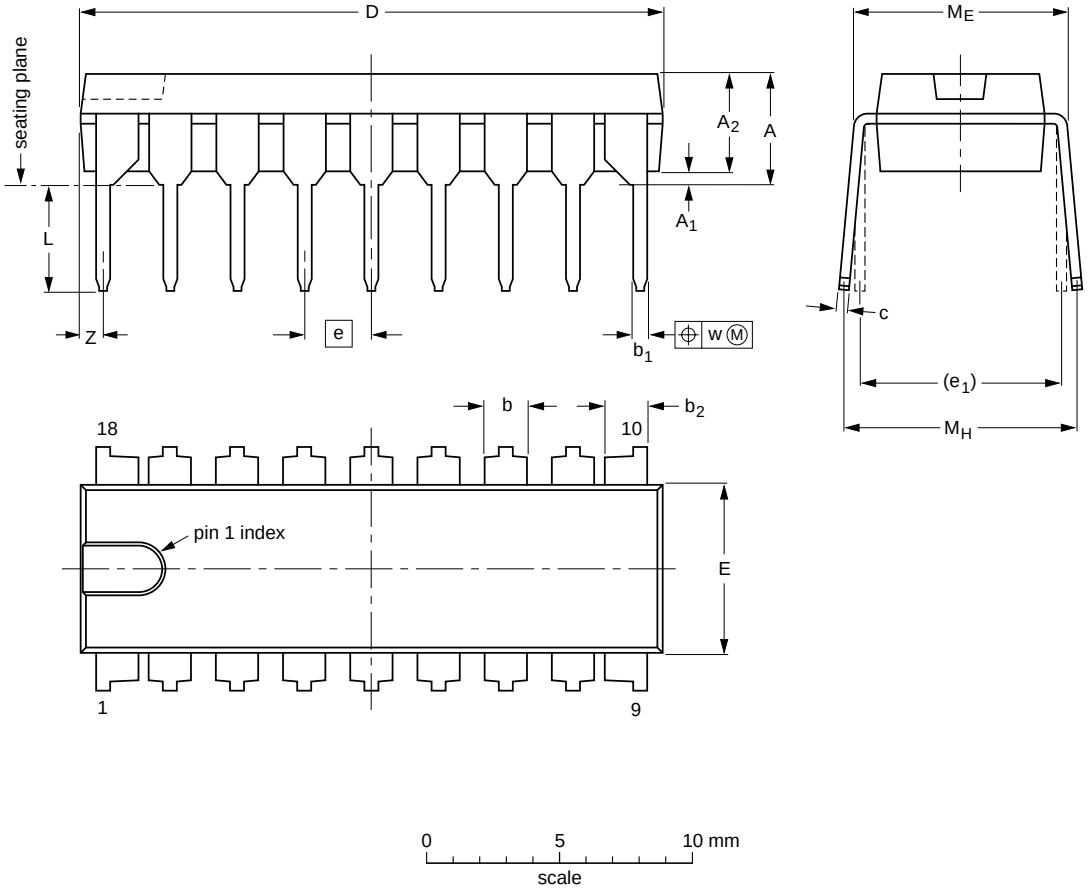

DIMENSIONS (inch dimensions are derived from the original mm dimensions)

UNIT	A max.	A_1 min.	A_2 max.	b	b_1	b_2	c	D (1)	E (1)	e	e_1	L	M_E	M_H	w	Z (1) max.
mm	4.7	0.51	3.7	1.40 1.14	0.53 0.38	1.40 1.14	0.32 0.23	21.8 21.4	6.48 6.20	2.54	7.62	3.9 3.4	8.25 7.80	9.5 8.3	0.254	0.85
inches	0.19	0.020	0.15	0.055 0.044	0.021 0.015	0.055 0.044	0.013 0.009	0.86 0.84	0.26 0.24	0.10	0.30	0.15 0.13	0.32 0.31	0.37 0.33	0.01	0.033

Note

1. Plastic or metal protrusions of 0.25 mm maximum per side are not included.

OUTLINE VERSION	REFERENCES				EUROPEAN PROJECTION	ISSUE DATE
	IEC	JEDEC	EIAJ			
SOT102-1						~~93-10-14~~ 95-01-23

SO20: plastic small outline package; 20 leads; body width 7.5 mm **SOT163-1**

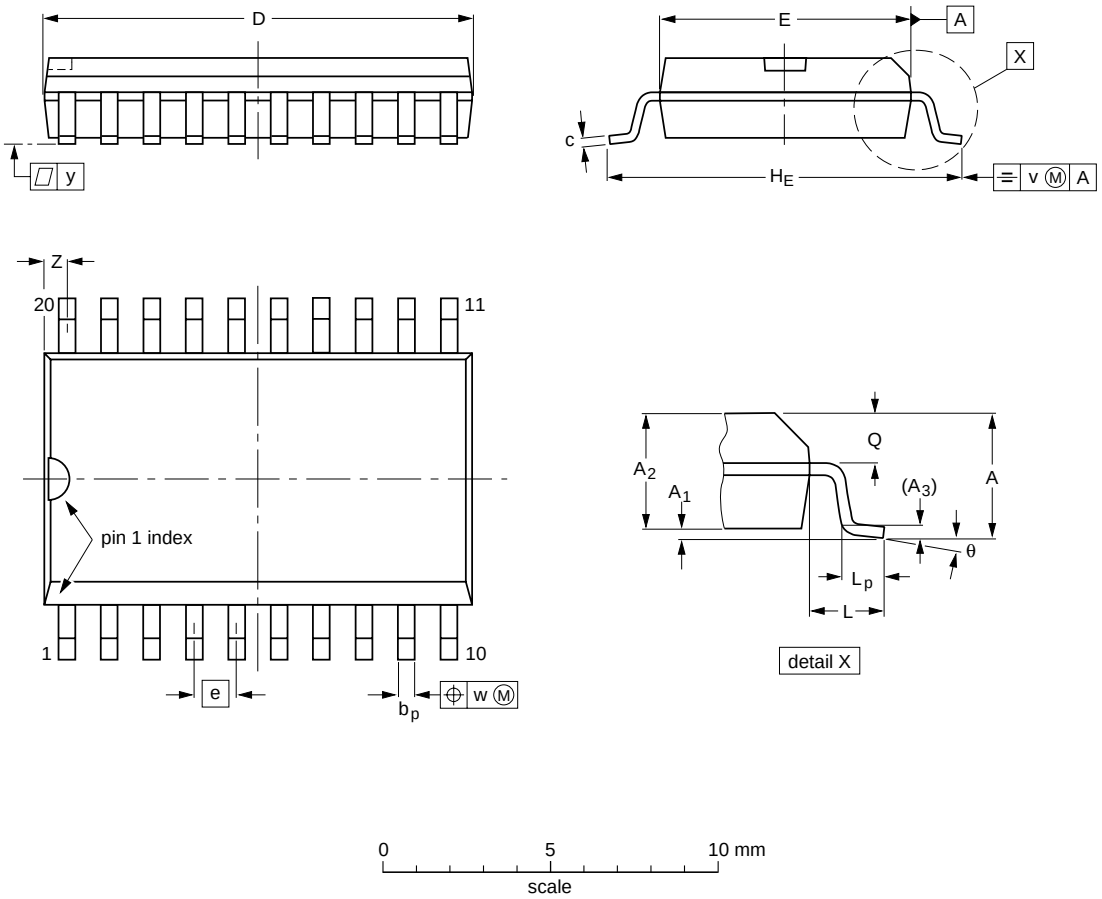

DIMENSIONS (inch dimensions are derived from the original mm dimensions)

UNIT	A max.	A_1	A_2	A_3	b_p	c	D (1)	E (1)	e	H_E	L	L_p	Q	v	w	y	Z (1)	θ
mm	2.65	0.30 0.10	2.45 2.25	0.25	0.49 0.36	0.32 0.23	13.0 12.6	7.6 7.4	1.27	10.65 10.00	1.4	1.1 0.4	1.1 1.0	0.25	0.25	0.1	0.9 0.4	8° 0°
inches	0.10	0.012 0.004	0.096 0.089	0.01	0.019 0.014	0.013 0.009	0.51 0.49	0.30 0.29	0.050	0.419 0.394	0.055	0.043 0.016	0.043 0.039	0.01	0.01	0.004	0.035 0.016	

Note

1. Plastic or metal protrusions of 0.15 mm maximum per side are not included.

OUTLINE VERSION	REFERENCES				EUROPEAN PROJECTION	ISSUE DATE
	IEC	JEDEC	EIAJ			
SOT163-1	075E04	MS-013AC				~~95-01-24~~ 97-05-22

SOLDERING

Introduction

There is no soldering method that is ideal for all IC packages. Wave soldering is often preferred when through-hole and surface mounted components are mixed on one printed-circuit board. However, wave soldering is not always suitable for surface mounted ICs, or for printed-circuits with high population densities. In these situations reflow soldering is often used.

This text gives a very brief insight to a complex technology. A more in-depth account of soldering ICs can be found in our *"IC Package Databook"* (order code 9398 652 90011).

DIP

Soldering by dipping or by wave

The maximum permissible temperature of the solder is 260 °C; solder at this temperature must not be in contact with the joint for more than 5 seconds. The total contact time of successive solder waves must not exceed 5 seconds.

The device may be mounted up to the seating plane, but the temperature of the plastic body must not exceed the specified maximum storage temperature ($T_{stg\ max}$). If the printed-circuit board has been pre-heated, forced cooling may be necessary immediately after soldering to keep the temperature within the permissible limit.

Repairing soldered joints

Apply a low voltage soldering iron (less than 24 V) to the lead(s) of the package, below the seating plane or not more than 2 mm above it. If the temperature of the soldering iron bit is less than 300 °C it may remain in contact for up to 10 seconds. If the bit temperature is between 300 and 400 °C, contact may be up to 5 seconds.

SO

Reflow soldering

Reflow soldering techniques are suitable for all SO packages.

Reflow soldering requires solder paste (a suspension of fine solder particles, flux and binding agent) to be applied to the printed-circuit board by screen printing, stencilling or pressure-syringe dispensing before package placement.

Several techniques exist for reflowing; for example, thermal conduction by heated belt. Dwell times vary between 50 and 300 seconds depending on heating method. Typical reflow temperatures range from 215 to 250 °C.

Preheating is necessary to dry the paste and evaporate the binding agent. Preheating duration: 45 minutes at 45 °C.

Wave soldering

Wave soldering techniques can be used for all SO packages if the following conditions are observed:

- A double-wave (a turbulent wave with high upward pressure followed by a smooth laminar wave) soldering technique should be used.
- The longitudinal axis of the package footprint must be parallel to the solder flow.
- The package footprint must incorporate solder thieves at the downstream end.

During placement and before soldering, the package must be fixed with a droplet of adhesive. The adhesive can be applied by screen printing, pin transfer or syringe dispensing. The package can be soldered after the adhesive is cured.

Maximum permissible solder temperature is 260 °C, and maximum duration of package immersion in solder is 10 seconds, if cooled to less than 150 °C within 6 seconds. Typical dwell time is 4 seconds at 250 °C.

A mildly-activated flux will eliminate the need for removal of corrosive residues in most applications.

Repairing soldered joints

Fix the component by first soldering two diagonally-opposite end leads. Use only a low voltage soldering iron (less than 24 V) applied to the flat part of the lead. Contact time must be limited to 10 seconds at up to 300 °C. When using a dedicated tool, all other leads can be soldered in one operation within 2 to 5 seconds between 270 and 320 °C.

DEFINITIONS

Data sheet status	
Objective specification	This data sheet contains target or goal specifications for product development.
Preliminary specification	This data sheet contains preliminary data; supplementary data may be published later.
Product specification	This data sheet contains final product specifications.
Limiting values	
Limiting values given are in accordance with the Absolute Maximum Rating System (IEC 134). Stress above one or more of the limiting values may cause permanent damage to the device. These are stress ratings only and operation of the device at these or at any other conditions above those given in the Characteristics sections of the specification is not implied. Exposure to limiting values for extended periods may affect device reliability.	
Application information	
Where application information is given, it is advisory and does not form part of the specification.	

LIFE SUPPORT APPLICATIONS

These products are not designed for use in life support appliances, devices, or systems where malfunction of these products can reasonably be expected to result in personal injury. Philips customers using or selling these products for use in such applications do so at their own risk and agree to fully indemnify Philips for any damages resulting from such improper use or sale.