查询SBX1601A供应商 捷多邦，专业PCB打样工厂，24小时加急出货

SONY SBX1601A

Serial Interface/Transmission Encoder

Description

The SBX1601A is a hybrid IC encoder that converts the parallel data into serial form for the purpose of interface or transmission of digital video or audio data. The encoding format employed conforms to SMPTE T14.224 tentative standard.

Features

All circuitry necessary for conversion from parallel format data into serial data are included. This allows for simple usage of this serial transmission encoder with only a few external components.

Other related IC's include SBX1602A serial transmission decoder (including cable equalizer and serial to parallel conversion) and CXA1389AQ coaxial cable driver.

Package Outline

Unit : mm

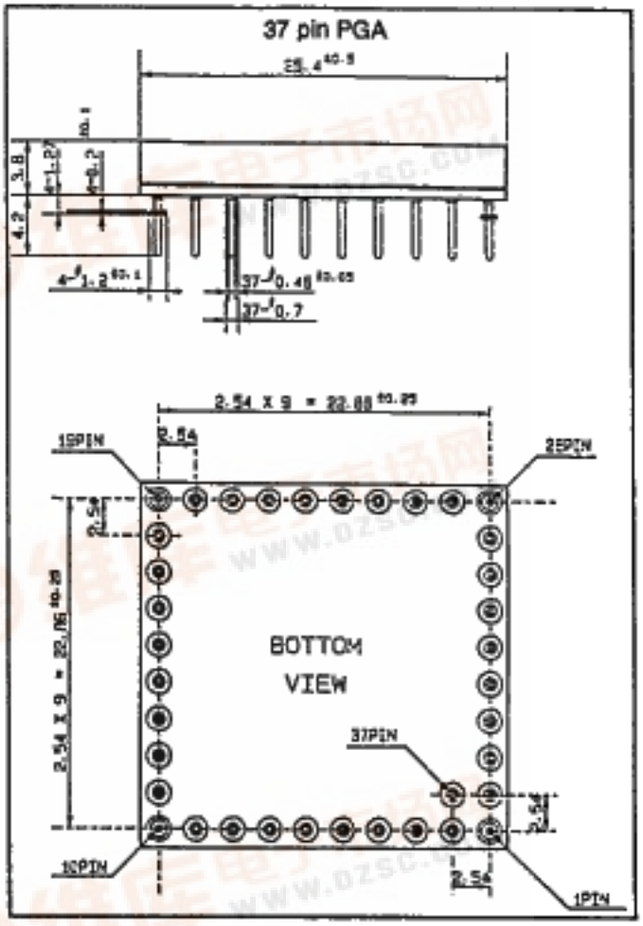

1. Structure

Hybrid IC

2. Applications

- Encoder for 100 to 270 Mbps Serial data.
- Examples of application:

Serial Interface/Transmission for	
4 : 2 : 2	270Mbps
4fsc PAL	177Mbps
4fsc NTSC	143Mbps.

3. Functions

- Parallel to serial conversion
- Scrambler: Modulo-2 division by $G(X)=(X^9+X^4+1)(X+1)$
- PLL for serial clock generation
- PLL lock detection
- SYNC word or Timing Reference Signal (or TRS) required in Parallel incoming data (Hex).

	8bit	10bit
1st word	FF	3FF
2nd word	00	000
3rd word	00	000
4th word (4fsc only)	00	000

(8bit TRS is internally converted to that of 10 bit).

Note) The words composing the SYNC word given above shall not appear during data words.
This limitation includes 00 and FF in 8 bit use and 000 through 003 and 3FC through 3FF in 10 bit use.

Sony reserves the right to change products and specifications without prior notice. This information does not convey any license by any implication or otherwise under any patents or other right. Application circuits shown, if any, are typical examples illustrating the operation of the devices. Sony cannot assume responsibility for any problems arising out of the use of these circuits.

E90723A16 – ST

4. Absolute Maximum Ratings (Ta=25℃)

Item	Symbol	Ratings	Unit
Supply voltage	V_{EE}	−6	V
	V_{CC}	6	V
Input voltage	V_{IN}	V_{EE} to V_{CC}	V
Output current	I_{OUT}	−30	mA
Operating temperature	Top	0 to 65	℃
Storage temperature	Tstg	−50 to +125	℃
Allowable power dissipation	P_D	2.0	W

5. Recommended Operating Conditions

Item	Symbol	Ratings	Unit
Supply voltage	V_{EE}	−4.8 to −5.2	V
Supply voltage Note)	V_{CC}	4.8 to 5.2	V
Operating temperature	Top	0 to 65	℃

Note) Above conditions are for TTL input.
Voltages are given with respect to the GND potential.

6. Block Diagram

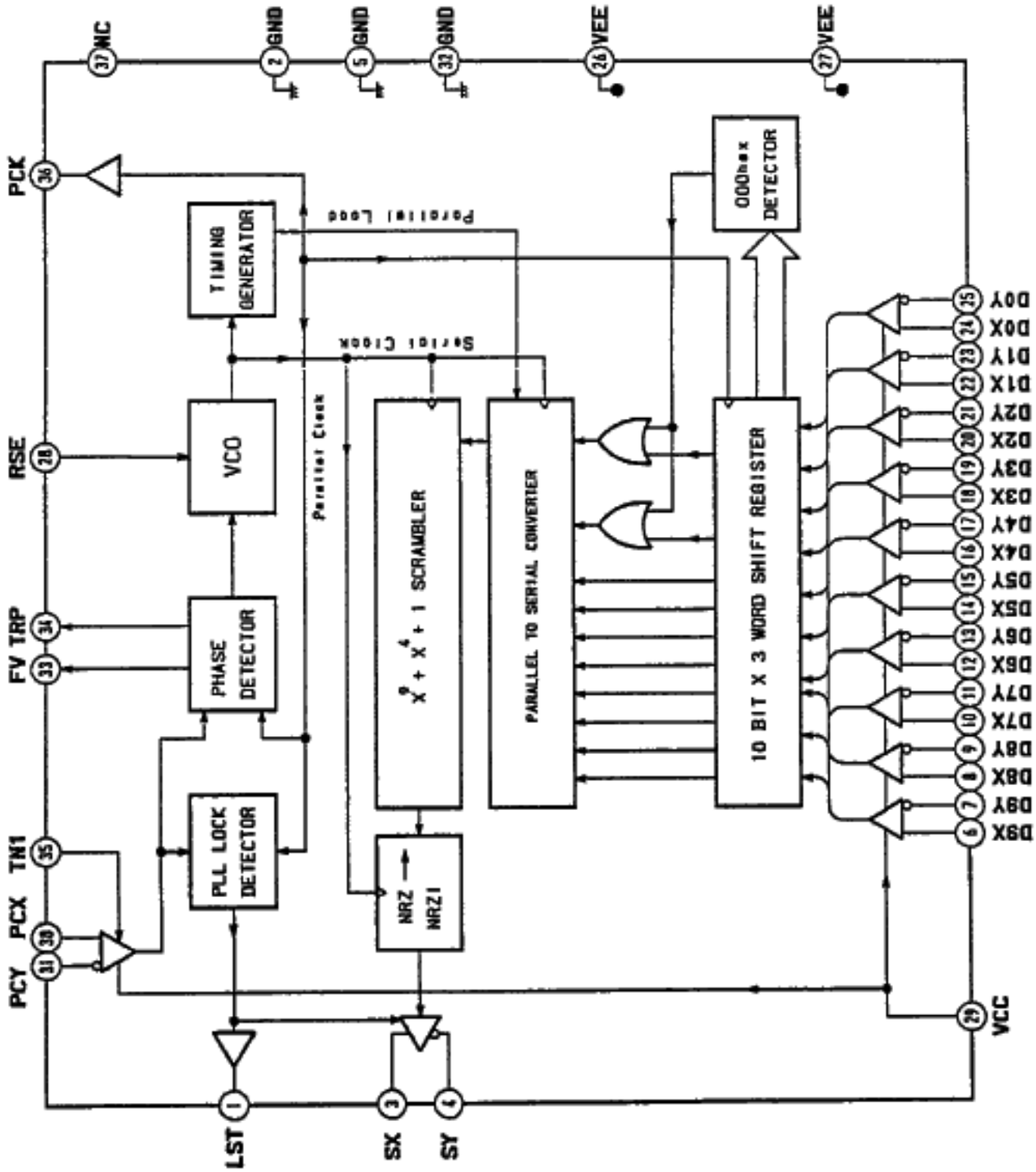

Block diagram of SBX-1601A

7. Pin Description

Pin No.	Symbol	Equivalent circuit	Description	I/O	Standard Min.	Typ.	Max.	Unit
1	LST	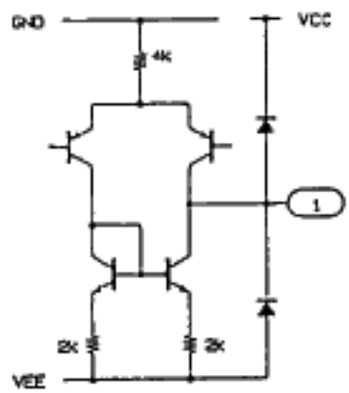	PLL lock detection. Turns to H during PLL lock. At unlock becomes irregular. At free run (TN1 H) turns to L.	O				
			H		–1.0			V
			L				–4.0	V
36	PCK	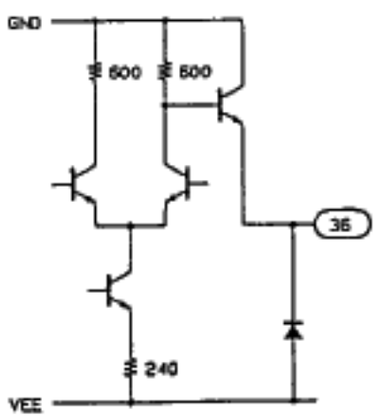	Clock output frequency divided to 1/10 VCO output. Utilized to check VCO free run frequency.	O				
			H			–0.8		V
			L			–1.6		V
3	SX	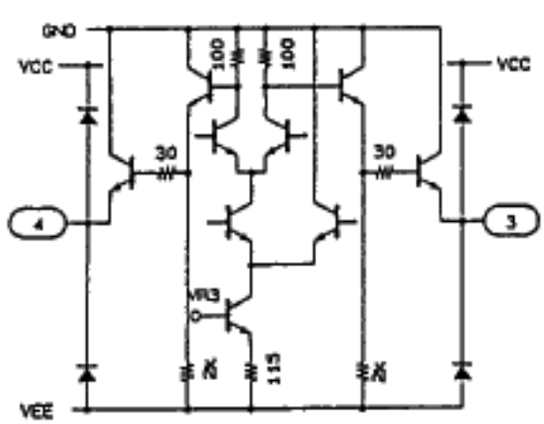	Input parallel data is converted to serial. Moreover, scramble, NRZ to NRZI converted data is differentially output.					
4	SY							
			H			–1.6		V
			L			–2.4		V

Pin No.	Symbol	Equivalent circuit	Description	I/O	Standard Min.	Typ.	Max.	Unit
29	Vcc	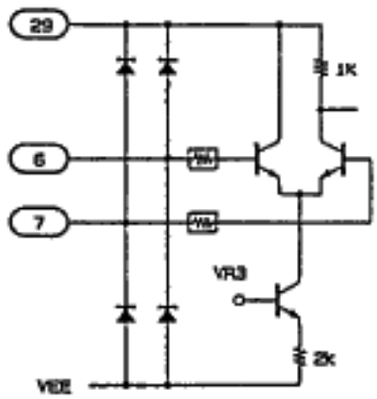	Power supply for clock and parallel data input buffers: Give +5V for TTL input or –5V for ECL input.	—				
6	D9X							
7	D9Y							
8	D8X							
9	D8Y		Parallel input ports:					
10	D7X		D9 is MSB					
11	D7Y		D0 is LSB X is for signal. Y is for return.	I				
12	D6X							
13	D6Y							
14	D5X		For TTL input H		2.0			V
15	D5Y		(Vcc=+5V) L				0.8	V
16	D4X							
17	D4Y							
18	D3X		For ECL input H		–1.0			V
19	D3Y		(Vcc=0V) L				–1.6	V
20	D2X							
21	D2Y							
22	D1X							
23	D1Y							
24	D0X							
25	D0Y							

Pin No.	Symbol	Equivalent circuit	Description	I/O	Standard Min.	Typ.	Max.	Unit
28	RSE	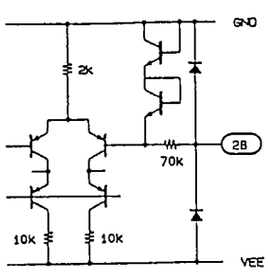	Selection of VCO oscillation range: H: High range 140 to 270MHz L: Low range 100 to 145MHz H L	O	 –0.4		 –4.0	 V V
30	PCK	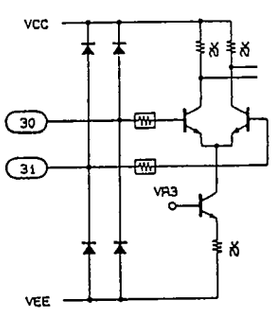	Parallel clock input (PCX) and its return (PCY): For ECL input (Vcc=0V) H L For TTL input (Vcc=+5V) H L	I	 –1.0 2.0		 –1.6 0.8	 V V V V
31	PCY							
2 5 32	GND		GND	—				
26	VEE		–5V power supply for I/O buffers PLL	—	–5.2	–5.0	–4.8	V
27	VEE		–5V power supply for Logic block	—	–5.2	–5.0	–4.8	V

Pin No.	Symbol	Equivalent circuit	Description	I/O	Standard			
					Min.	Typ.	Max.	Unit
33	FV	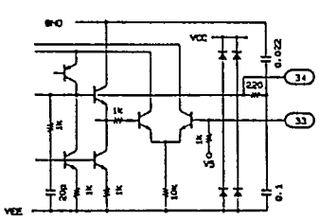	Adjustment of VCO free run frequency: The closer this pin is to VEE, the lower the frequency. To adjust, TN1 pin shall be connected to GND.	I		–3.9		V
34	TRP		Phase comparator out/VCO input: Connect to a trap inorder to attenuate jitter.	O		–3.2		V
35	TN1	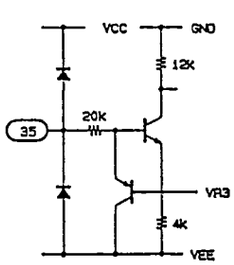	Test node: At H: Input disabled (VCO free run condition). At L: Input through.	I	–1.0		–4.5	V V

8. Electrical Characteristics

8-1. DC Characteristics

(V_{EE}=–5V, Ta=25℃)

Item	Symbol	Test conditions	Test circuit Fig.	Min.	Typ.	Max.	Unit
Supply current 1	I_{EE}	V_{EE}=–5V	Fig. 8-4		140		mA
Supply current 2	I_{CC}	V_{CC}=+5V			7		mA
Input voltage	V_{IH}	V_{CC}=GND Pin used PCX, PCY, DnX, DnY		–1.0			V
	V_{IL}					–1.6	V
	V_{IH}	V_{CC}=+5V Pin used PCX, PCY, DnX, DnY		2.0			V
	V_{IL}					0.8	V
Input current	I_{IH}	Pin used PCX, PCY, DnX, DnY	Fig. 8-5			+5.0	μA
	I_{IL}			–1.0		+1.0	μA
Input voltage	V_{IH}	Pin used RSE	Fig. 8-9	–0.4			V
	V_{IL}					–4.0	V
	V_{IH}	Pin used TN1	Fig. 8-8	–1.0			V
	V_{IL}					–4.5	V
Output voltage	V_{OH}	Pin used PCK R_P=1kΩ			–0.8		V
	V_{OL}				–1.6		V
	V_{OH}	Pin used LST I_{OH}=–10μA, I_{OL}=+10μA	Fig. 8-7	–1.0			V
	V_{OL}					–4.0	V
	V_{OH}	Pin used SX, SY R_P=220Ω			–1.6		V
	V_O				–2.4		V

8-2. AC Characteristics

PLL

Item	Symbol	Test conditions	Test circuit Fig.	Min.	Typ.	Max.	Unit
VCO Max. oscillation frequency 1	f_{MAX1}	RSE= "H"	Fig. 8-6	30.0			MHz
	f_{MIN1}					14.0	MHz
VCO Max. oscillation frequency 2	f_{MAX2}	RSE= "L"		15.0			MHz
	f_{MIN2}					10.0	MHz
PLL pull in range	f_{HP1}	f signal=270MHz RSE= "H"	Fig. 8-3	27.7			MHz
	f_{LP1}					25.5	MHz
	f_{HP2}	f signal=177MHz RSE= "H"		18.8			MHz
	f_{LP2}					16.5	MHz
	f_{HP3}	f signal=143MHz RSE= "L"		15.0			MHz
	f_{LP3}					13.0	MHz
Jitter	tjit	f signal=270MHz RSE= "H"	Fig. 8-10			±0.25	nsec

Tested through PCK (Pin 36): 1/10 of serial clock.

Switching Characteristics

(V_{EE}=−5V, Ta=25℃)

Item	Symbol	Test conditions	Test circuit Fig.	Min.	Typ.	Max.	Unit
rise time	tr	Pins used PCK R_P=1kΩ			0.8		nsec
fall time	tf				1.4		nsec
rise time	tr	Pins used SX, SY R_P=220Ω			0.7		nsec
fall time	tf				0.7		nsec

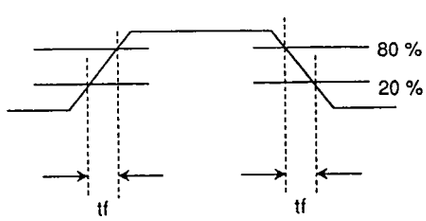

Fig. 8-1. Definition of tr, tf

Timing Relation of Input Clock and Data

(V_{EE}=−5V, Ta=25℃)

Item	Symbol	Test conditions	Test circuit Fig.	Min.	Typ.	Max.	Unit
Pulse width	tw	Pins used PCX, PCY	Fig. 8-3	tc/2 −5		tc/2 +5	nsec
Delay time	td	PCX-Dn		+5		+5	nsec

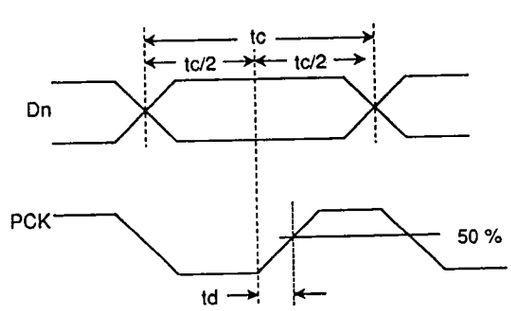

Fig. 8-2. Definition of td, tw

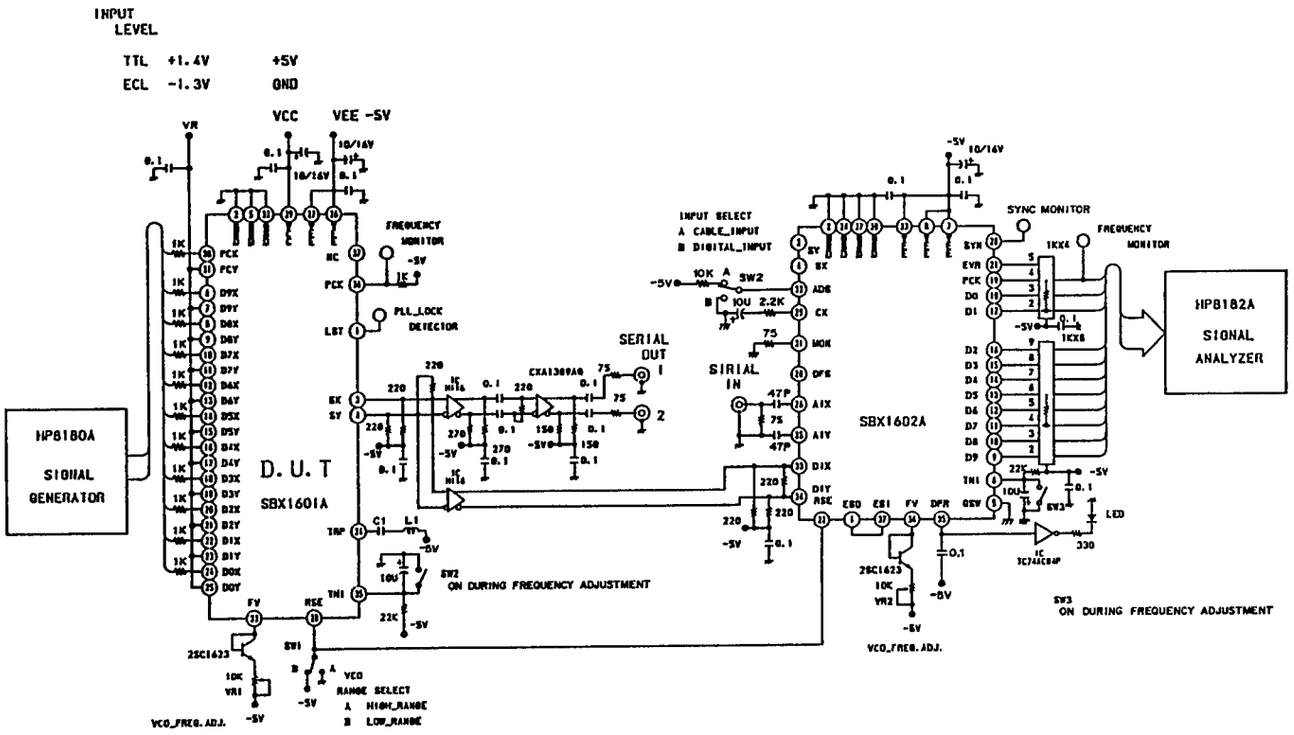

Fig. 8-3. Test circuit diagram

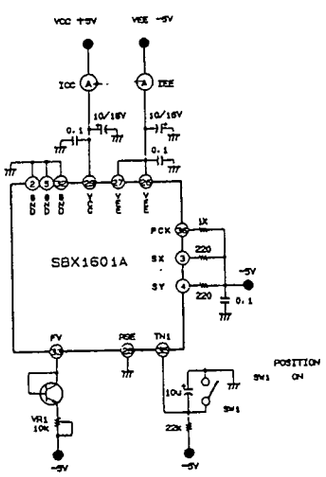

Fig. 8-4.

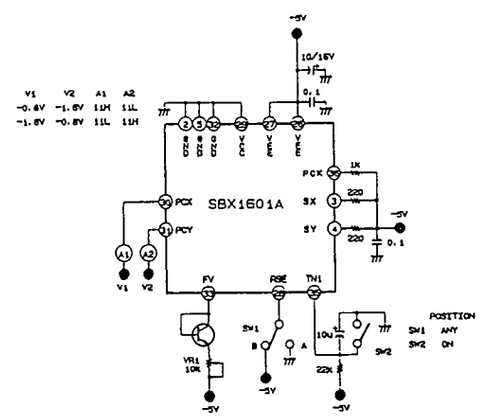

Fig. 8-5.

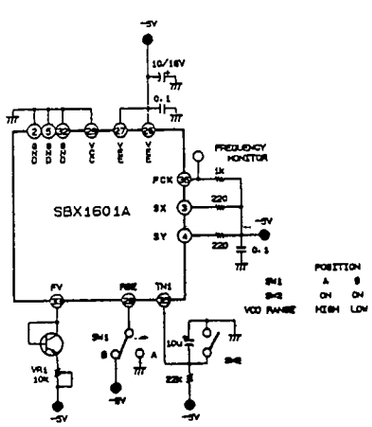

Fig. 8-6.

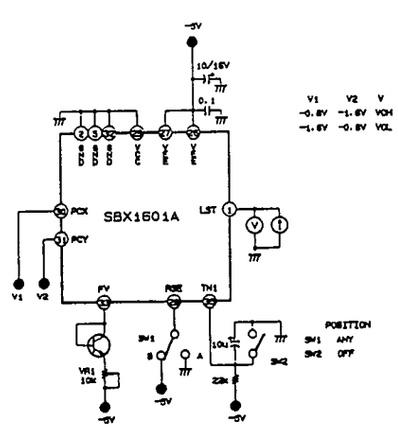

Fig. 8-7.

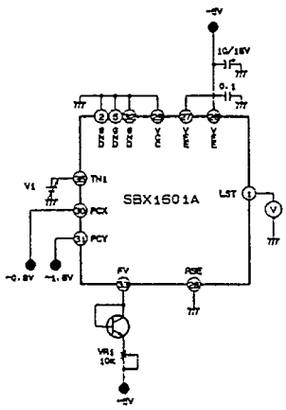

Fig. 8-8.

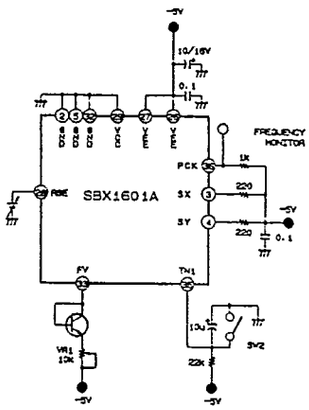

Fig. 8-9.

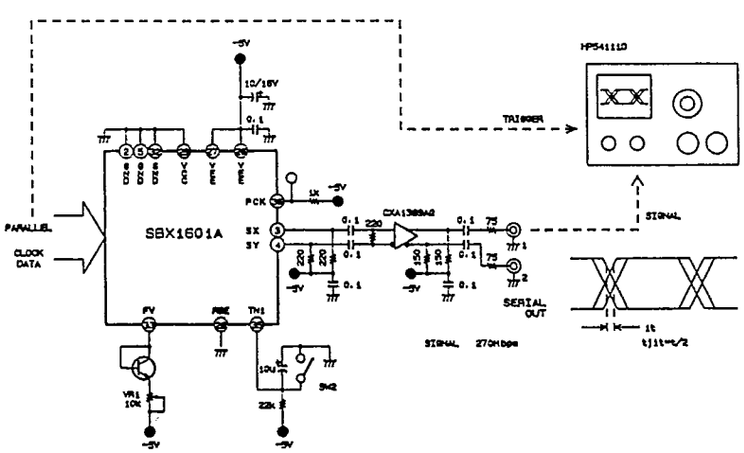

Fig. 8-10.

9. Description of Operation

SBX1601A internally generates a clock which is 10 times higher in frequency as that of parallel and locked to the input parallel clock in terms of a built-in PLL and converts input parallel data into serial data.

To facilitate clock extraction at the receiving end, serial data is being scrambled. To eliminate data polarity it is then converted to NRZI and output in differential form.

There is also a PLL lock detection circuit which enables the serial output circuit only when it is locked.

9-1 Phase Relation between Input Parallel Clock and Data

The phase relation between the parallel clock and data is shown in Fig. 9-1. Both clock and data are differentially input.

Parallel clock and data are input so that the rising edge of PCX be at the center of the data. A clock of almost the same phase as PCX is generated inside the IC to latch data inside the IC.

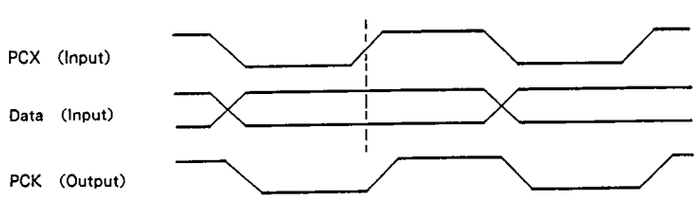

Fig. 9-1. Phase relation between clock and data

9-2. Input Circuit Requirements

Parallel clock and data can be given either by ECL or TTL logic. With ECL input every X or Y input can be used directly as an input for an ECL line receiver. To use with TTL input, Vcc (Pin 29) shall be connected to +5V. A fixed bias of +1.4V* shall be applied to PCY and DnY (n=0 to 9). TTL signals and its parallel clock shall be provided through 1 K ohm resistors to each "X" input. Those 1kΩ resistors are effective to minimize the influence of the TTL input signals to the jitter characteristics of the serial output signal. For 8 bit data, maintain unused LSBs to logical "0" state.

(* The fixed bias value can be higher, for example 2.5V in case of CMOS input).

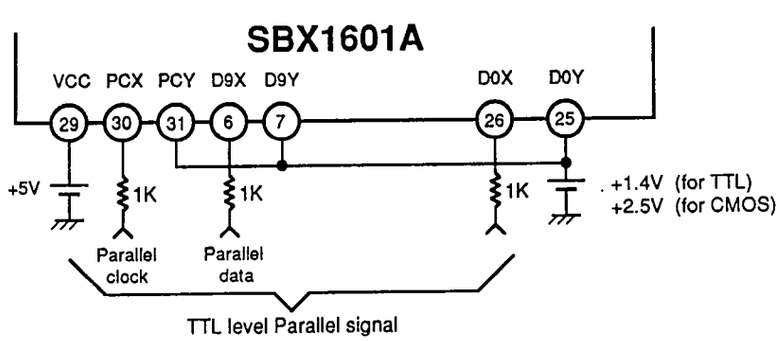

Fig. 9-2. Usage with TTL level Input

9-3. Clock Generation

Fig. 9-3. shows a block diagram of PLL, PLL lock detection and the serial output control . When TN1 (pin 35) is set to "H" (connected to GND), the parallel clock input is disabled inside the IC. VCO turns to free run condition and adjustment of the free run frequency becomes possible through FV (pin 33).

Reducing the value of the resistance put between FV and V_{EE} lowers VCO oscillation frequency. Monitoring oscillation frequency is made through PCK (pin 36) which gives 1/10 frequency of VCO output. When PLL is locked, the phase of the PCK output coincides with that of the PCX input within a tolerance given. C–R time constant connected to TN1 serve to turn off the paralleled clock temporarily in order to avoid mislock problem. When supply voltage goes below –4.3V approximately, the input parallel clock is automatically shut off to set VCO free run frequency.

The selection of VCO oscillation frequency range is made by RSE (pin 28): "H" stands at 140 to 270MHz and at "L", at 100 to 145MHz.

TRP (Pin 33) is the output of the phase comparator. To minimize jitter component, a trap circuit consisting of a series resonant circuit turned at the parallel clock frequency in use is necessary.

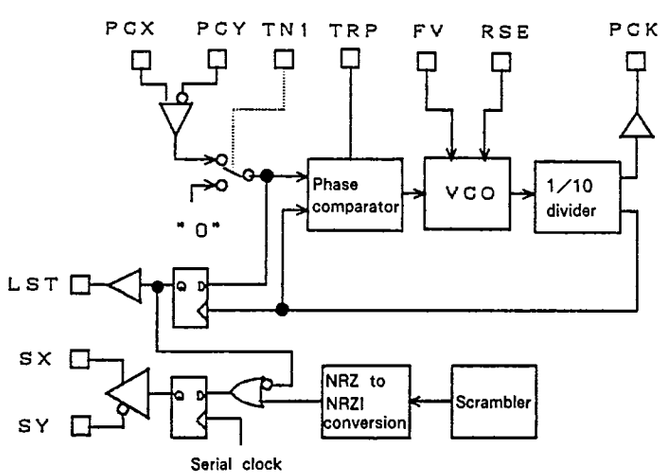

Fig. 9-3. PLL and serial output control block

9-4. PLL Lock Detection

LST signal is generated by latching the incoming parallel clock with the internal parallel clock which is 1/10 of the VCO frequency. LST serves as the PLL lock detection signal. The LST also controls serial output. If parallel clock input is disabled by means of TN1, LST turns to "L" and serial output turns to OFF condition (SX (3): "H", SY (4): "L") as described in the preceding section.

The involvement of LST in the control of serial output makes it possible to switch off the serial output signal at will by forcing the state of the input parallel clock to "L".

9-5. Sync Word Detection

To convert serial data back to parallel the receiving side, it is necessary to insert into the serial data some sort of timing reference signal which provides means of identifying each of the parallel data word. In the SMPTE digital interface format, it is called TRS (Timing Reference Signal).

TRS consists of following 3 words, 3FF, 000, 000 in the incoming order.

For details refer to SMPTE docs 125M and T14.224.

9-6. TRS Generation for 8 bit Data

Although the basic system works for 10 bit data, 8 bit data can be accepted using the upper 8 bits of SBX1601A maintaining the lower 2 bits at logical "L" states as shown in Fig. 9-4.

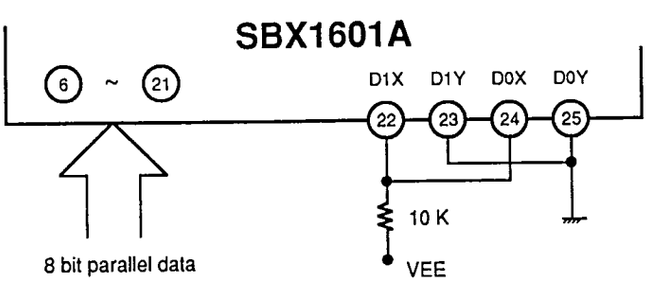

Fig. 9-4. Usage of 8 bit data (ECL level)

Since the 8 bit TRS signal FF,00,00 is converted to 3FC,000,000 by the above agreement, within this particular chip the conversion algorithm of 8 bit TRS to that of 10 bit is made in such a way that when two contiguous 000 words are detected at the parallel input the 2 LSBs of the preceding words are set to "1"s , which results in 3FF, 000, 000 as shown in Fig. 9-5.

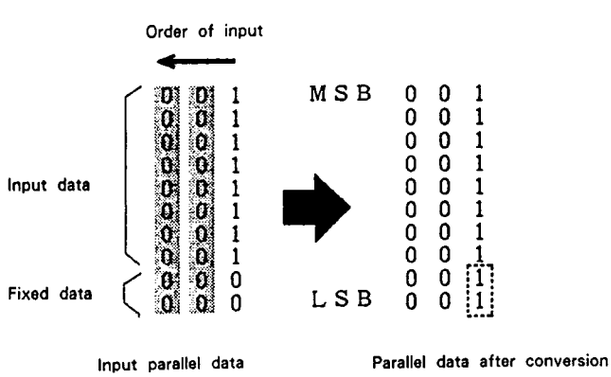

Fig. 9-5. Conversion from 8 bit TRS to 10 bit TRS

Note) If more than 3 consecutive words of 000 in D1 standard, or 4 consecutive words 000 in D2 standards, occur at the parallel input it does not meet the SMPTE T14.224 proposed standard thus no proper operation is possible.

9-7. Scrambler

Fig. 9-6 (a) shows a basic scrambler block showing the modulo-2 division by $X^9 + X^4 + 1$. Fig. 9-6 (b) shows the actual form of the scrambler which is equivalent to (a) but fully pipelined.

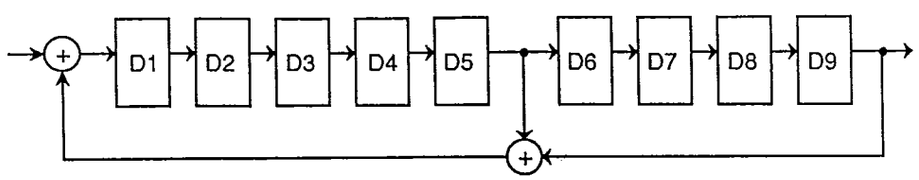

Fig. 9-6 (a). X^9+X^4+1 scrambler

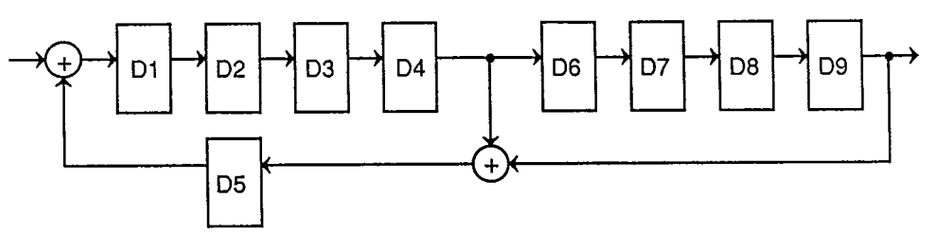

Fig. 9-6 (b). Actual X^9+X^4+1 scrambler

9-8. NRZ to NRZI Conversion

To eliminate the signal polarity of scrambled data, conversion from NRZ to NRZI is employed.

Thanks to the nature of NRZI code, maintenance of the polarity of signal becomes unnecessary in design and manufacturing of equipment.

Further, if a differential output is used as two separate signal sources, their spurious radiation components tend to cancel out or lower to each other.

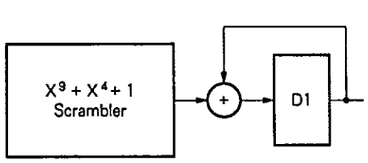

Fig. 9-7. NRZ to NRZI conversion

9-9. VCO Frequency Adjustment

VCO free-run frequency is adjusted generally at room temperature after the temperature of the IC reaches a steady state (5 to 10 minutes after power supply is ON). First, set VCO to free-run condition either by connecting TN1 node to ground or by maintaining parallel clock input (PCX) at logical "L" state. While monitoring PCK (Pin 36) output, adjust the frequency within ±1% of the desired parallel clock in terms of the variable resistor (VR1) shown in Fig. 9-8.

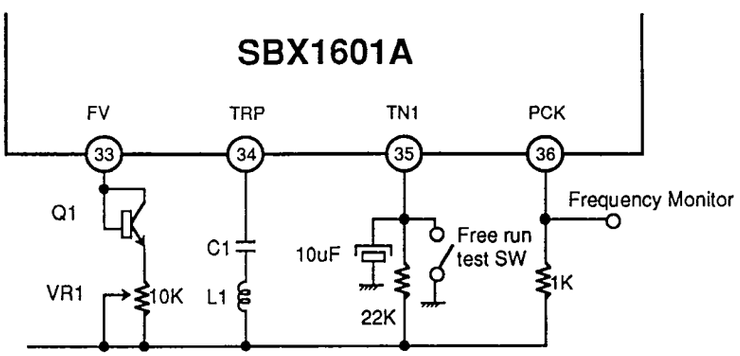

Fig. 9-8. VCO control area

9-10. Compensation on VCO Temperature Characteristics

A diode-connected transistor Q1 shown in Fig. 9-8. is effective to improve some residual frequency variation along the temperature change. Typical characteristics of the VCO are given in Fig. 9-9 (a) and 9-9 (b).

9-11. Jitter Trap

Since the internally generated serial clock is locked to the incoming parallel clock, there exists periodic jitter components which are generated from the phase comparison process of the PLL. A serial resonant circuit (trap) connected between TRP (Pin 34) and V_{EE} tuned at the parallel clock frequency reduces effectively the fundamental component of the jitter well below the specification (±0.25nsec). Recommended values of C_1 and L_1 are given in Table 9-1.

Standard / Component	D1	D2	
		PAL	NTSC
C_1 (PF)	150	240	300
L_1 (μH)	0.2	0.3	0.4

Table 9-1. Recommended values of the trap circuit

An important remark in a practical implementation is that TRP node is an input of a very sensitive voltage-frequency converter (VCO) which can be easily disturbed by any pick-up noise.
Hence, the trap circuit should be carefully located and be kept as short as possible from the pin 34 in order to avoid a noise problem.

10. Recommended Circuit

Fig. 10-1 (a) and 10-1 (b) show recommended circuit for ECL input and that of TTL respectively.

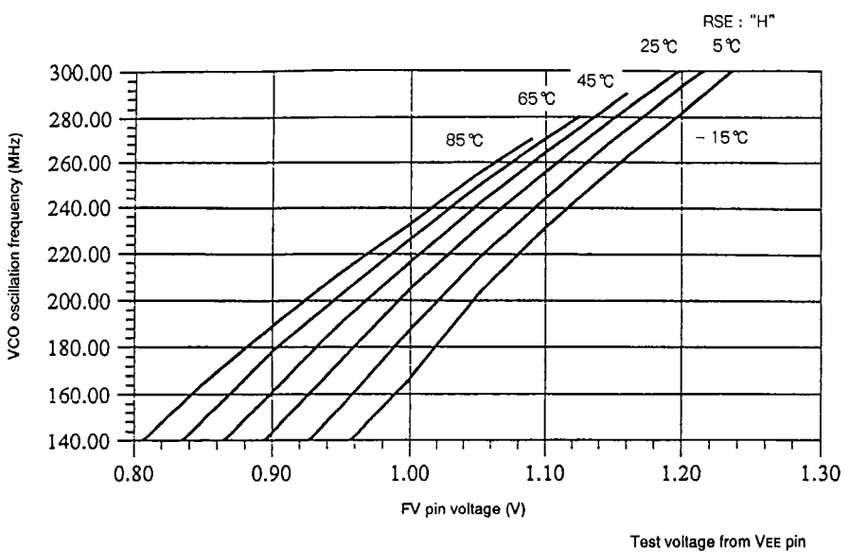

Fig. 9-9 (a). VCO oscillation frequency vs. FV pin voltage (High Rate)

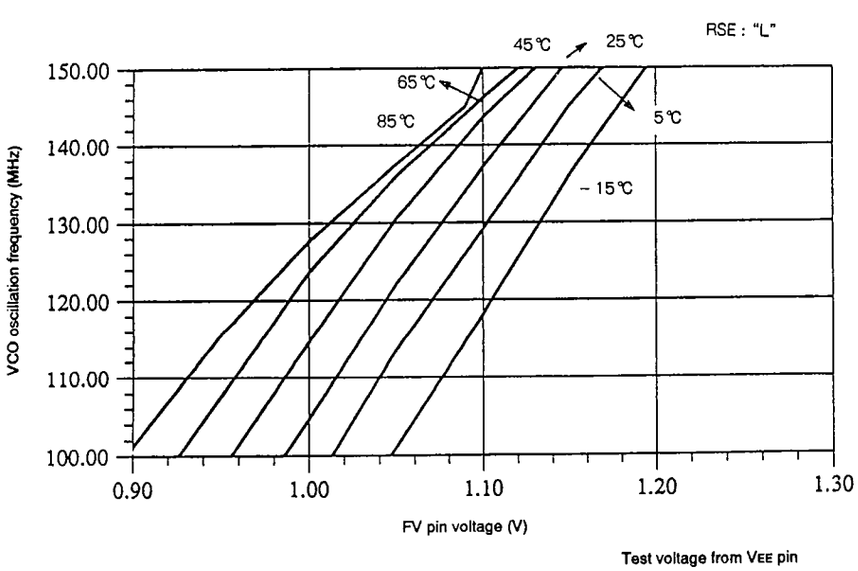

Fig. 9-9 (b). VCO oscillation frequency vs. FV pin voltage (Low Rate)

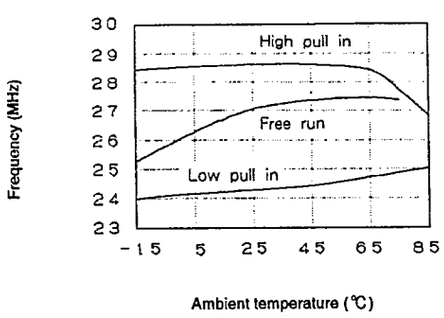

(a) at 270 Mb/sec (RSE="H")

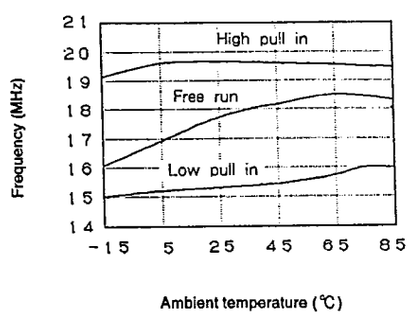

(b) at 177 Mb/sec (RSE="H")

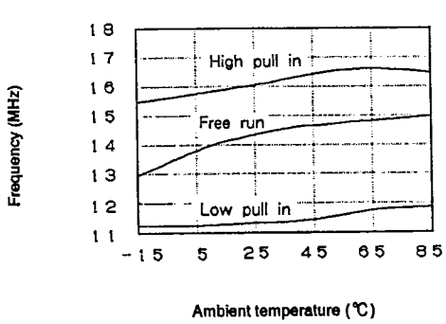

(c) at 143 Mb/sec (RSE="H")

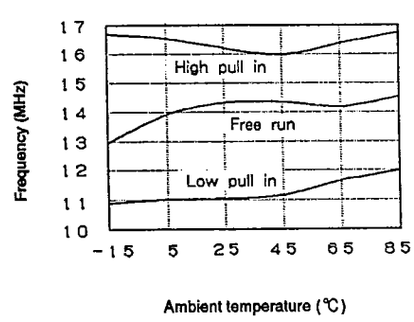

(d) at 143 Mb/sec (RSE="L")

Fig. 9-10. Typical characteristics of pull-in range and free-run frequencies

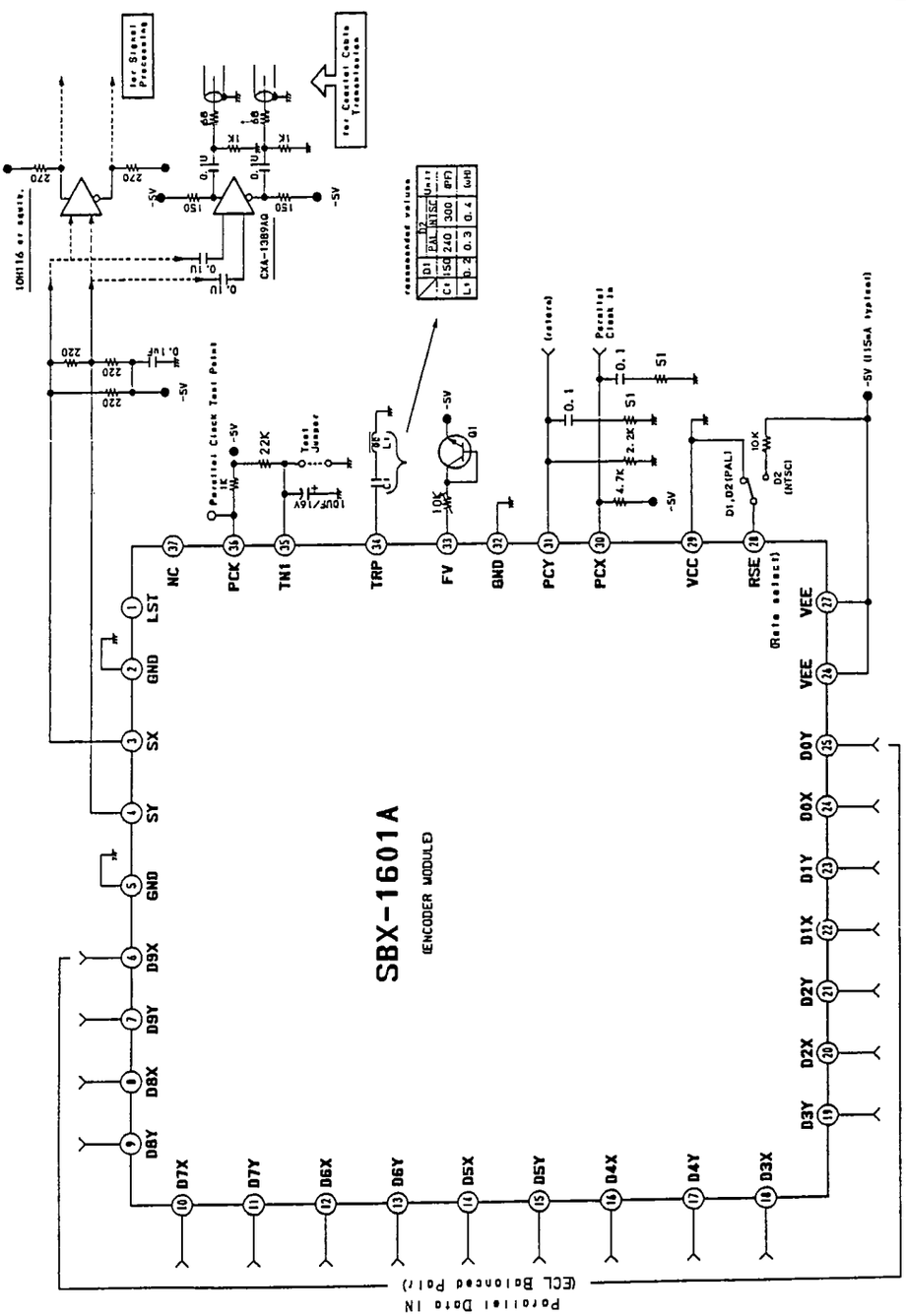

Fig. 10-1 (a). Recommended circuit for ECL input

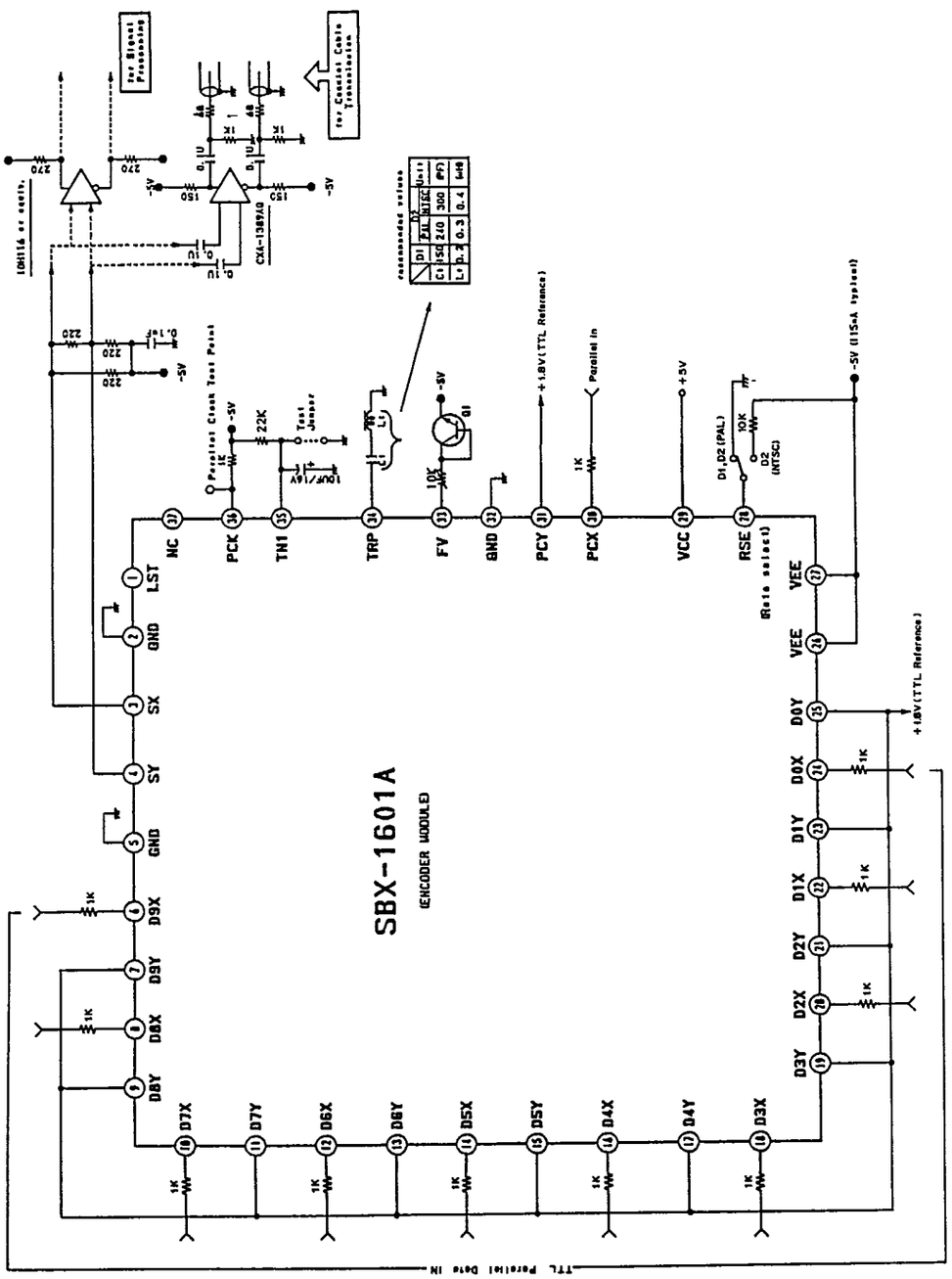

Fig. 10-1 (b). Recommended circuit for TTL input

11. Markings
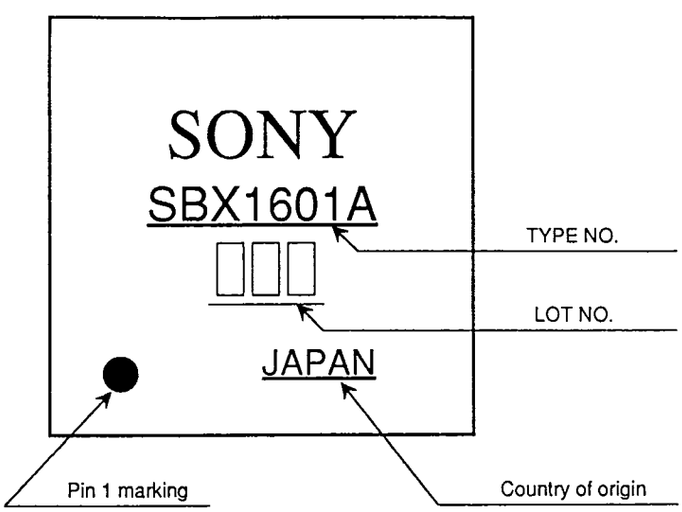
Markings and their meanings are as shown below.