查询SDT-1207供应商 捷多邦，专业PCB打样工厂，24小时加急出货

SMD POWER INDUCTORS

MODEL NO. : SDT-1207P SERIES (CDRH127B COMPATIBLE)

FEATURES:

* SUPERIOR QUALITY FOR AN AUTOMATED PRODUCTION LINE.
* PICK AND PLACE COMPATIBLE.
* TAPE AND REEL PACKING.

APPLICATION :

* NOTEBOOK COMPUTERS. * PDA. *ROGIC IC POWER SUPPLY

ELECTRICAL SPECIFICATION:

MODEL NO	INDUCTANCE (uH ± 30%) PRI	TURN RATIO PRI : SEC	RATED CURRENT (ADC)		DCR MAX (Ω)	
			PRI	SEC	PRI	SEC
SDT-1207P-4R7-122	4.7	1:2.2	6.5	0.30	0.025	0.10
SDT-1207P-100-122	10	1:2.2	6.5	0.30	0.035	0.30

NOTE(1):TEST FREQUENCY: 1 kHz,1 VRMS.

PHYSICAL DIMENSION(UNIT : mm)

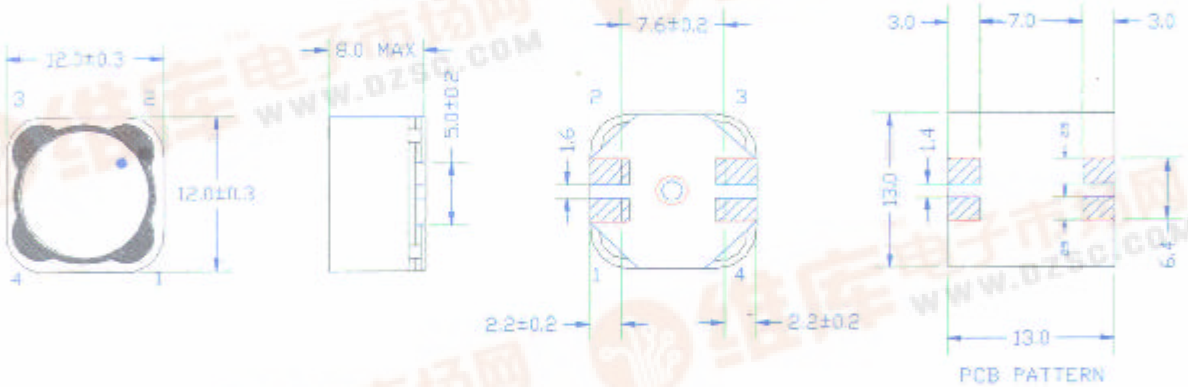

TEST CIRCUIT :

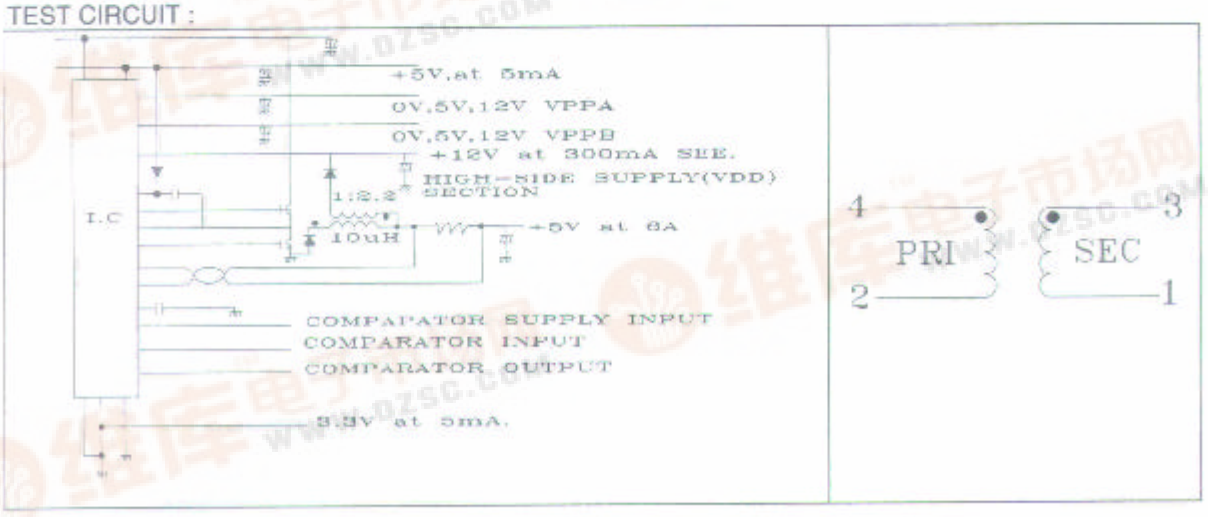

找PDF 维库一下 pdf.dzsc.com