SI-3025LSA

Data Sheet
27468.25

LOW-VOLTAGE, HIGH-CURRENT 2.5 V LINEAR REGULATOR

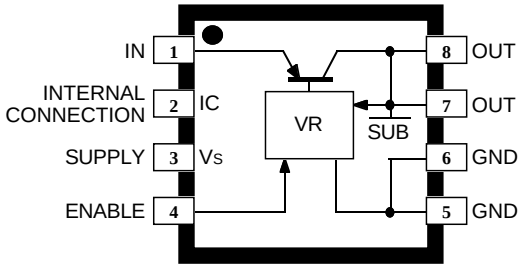

Dwg. PK-012

ABSOLUTE MAXIMUM RATINGS

Input Voltage, V_I ..... **16 V**
Supply Voltage, V_S ..... **16 V**
Continuous Output Current, I_O ..... **1.0 A***
Logic Input Voltage, V_E ..... **V_S**
Package Power Dissipation,
P_D ..... **See Graph**
Output Junction Temperature,
T_J ..... **+150°C†**
Operating Temperature Range,
T_A ..... **-30°C to +100°C**
Storage Temperature Range,
T_{stg} ..... **-30°C to +150°C**

* Output current rating may be limited by duty cycle, ambient temperature, and heat sinking. Under any set of conditions, do not exceed the specified current rating or a junction temperature of 150°C.

† Fault conditions that produce excessive junction temperature will activate the device's thermal shutdown circuitry. These conditions can be tolerated but should be avoided.

The SI-3025LSA is designed to meet the requirement for increased integration and reliability in low-voltage, high-current, linear regulator applications such as personal computers (PCs) and set-top boxes. Each device incorporates a monolithic low-level reference and control circuit with a high-current pnp transistor in a power multi-chip module (PMCM™). Regulated output voltages of 1.8 V or 3.3 V are also available.

The high-current pass element provides a low dropout voltage with output current to 1 A. Regulator accuracy of ±2 % and excellent temperature characteristics are provided. The logic-compatible ENABLE input gives the designer complete control over power up, power down, and standby or sleep.

These devices are supplied in a fully molded 8-lead miniature surface-mount package (tape and reel) with enhanced power-dissipating qualities. They are rated for continuous operation between -30°C and +100°C.

FEATURES

- 1 A Output Current
- Low Dropout voltage
- LSTTL/CMOS-Compatible On/Off Control
  Less Than 1 µA "Sleep" Current
- Internal Foldback Overcurrent Limiting
- Internal Thermal Shutdown
- Surface-Mount Package

Always order by complete part number: **SI-3025LSA-TL** ,
where "-TL" indicates tape and reel.

SanKen™ Allegro® MicroSystems, Inc.

FUNCTIONAL BLOCK DIAGRAM

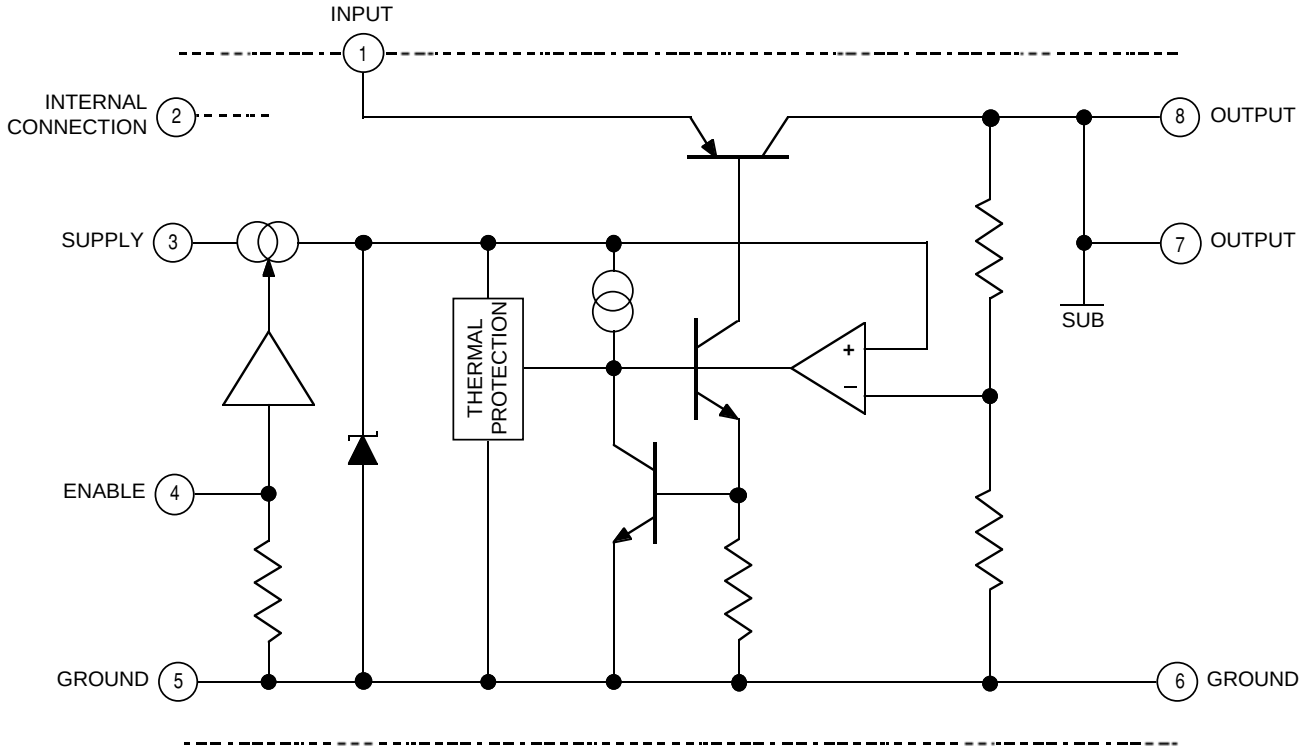

Dwg. FK-019

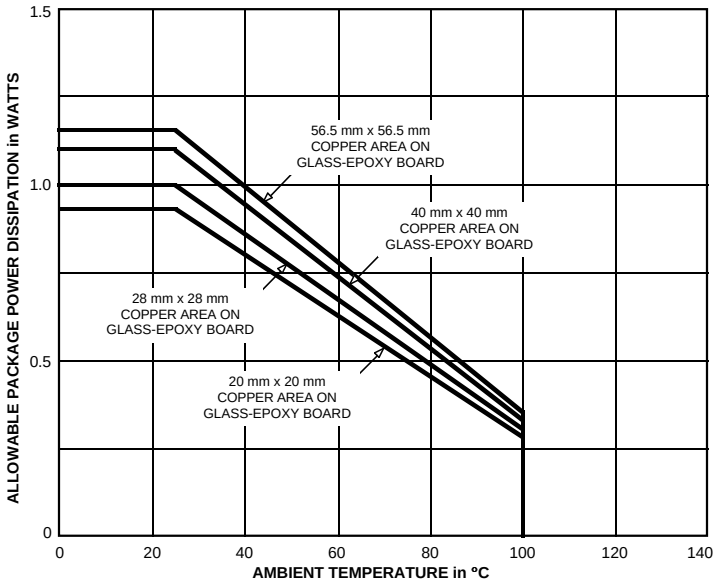

Dwg. GK-010-1

Leads 7 and 8 are soldered to the copper area and provide heat sinking of the pass transistor.

RECOMMENDED OPERATING CONDITIONS

Max. Input Voltage, V_I ..... **3.5 V**

Output Current, I_O ..... **0 A to 1.0 A**

Output Junction Temperature Range, T_J **-20 °C to +125°C**

Ambient Temperature Range, T_A ..... **-30°C to +85°C**

115 Northeast Cutoff, Box 15036
Worcester, Massachusetts 01615-0036 (508) 853-5000
Copyright © 2001 Allegro MicroSystems, Inc.

ELECTRICAL CHARACTERISTICS at T_A = +25°C, $V_I = V_S$ = 3.3 V, V_E = 2.0 V (unless otherwise noted).

Characteristic	Symbol	Test Conditions	Limits			
			Min.	Typ.	Max.	Units
Output Voltage	V_O	I_O = 500 mA	2.45	2.50	2.55	V
	V_{OQ}	V_E = 0 V, Output Off	—	—	0.5	V
Output Volt. Temp. Coeff.	a_{VO}	I_O = 5 mA, 0°C ≤ T_J ≤ 100°C	—	±0.3	—	mV/°C
Overcurrent Limit	I_{OM}	V_O = 95% of V_O at I_O = 500 mA	1.2	1.5	—	A
Line Regulation	$\Delta V_{O(\Delta VI)}$	3.1 V ≤ $V_I = V_S$ ≤ 3.5 V, I_O = 300 mA	—	2.0	10	mV
Load Regulation	$\Delta V_{O(\Delta IO)}$	0 ≤ I_O ≤ 1 A	—	10	20	mV
Dropout Voltage	$V_I$min - V_O	I_O ≤ 0.5 A	—	220	400	mV
		I_O ≤1 A	—	350	800	mV
Ground Terminal Current	I_{GND}	I_O = 0 mA	—	1.7	2.5	mA
	I_Q	V_E = 0 V, I_O = 0 mA	—	—	1.0	µA
Rejection Ratio	PSRR	100 Hz ≤ f ≤ 120 Hz	—	57	—	dB
ENABLE Input Voltage	V_{EH}	Output On	2.0	—	—	V
	V_{EL}	Output Off	—	—	0.8	V
ENABLE Input Current	I_{EH}	V_E = 2 V, Output On	—	40	80	µA
	I_{EL}	V_E = 0 V, Output Off	—	0	-5.0	µA
Thermal Shutdown Temp.	T_J		135	150	—	°C
Thermal Resistance	$R_{\theta JL}$	To terminals 7 and 8	—	36	—	°C/W

Typical values are at T_A = +25°C and are given for circuit design information only.

TYPICAL CHARACTERISTICS at T_A = 25°C

Dropout voltage

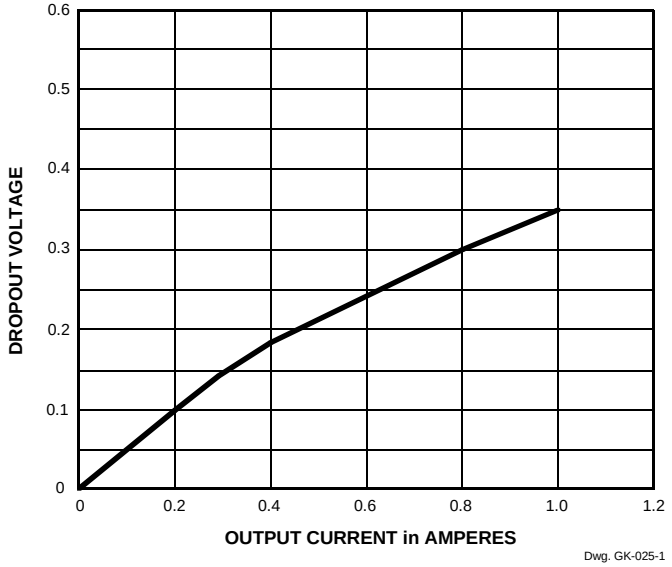

Load regulation

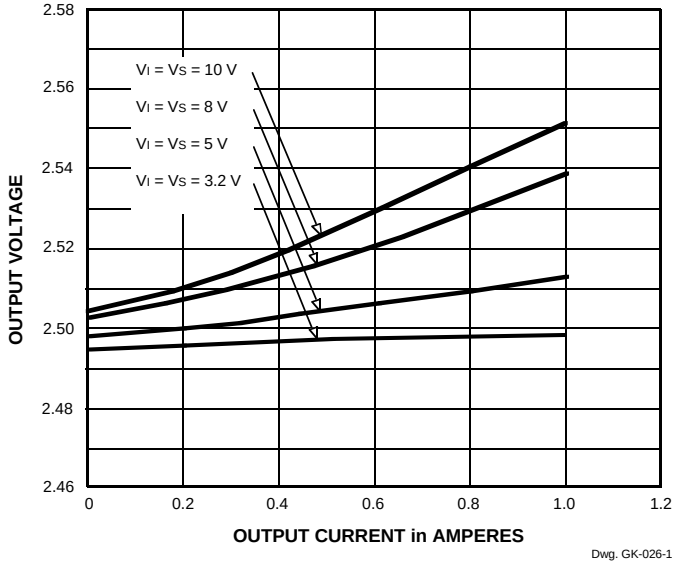

Overcurrent protection

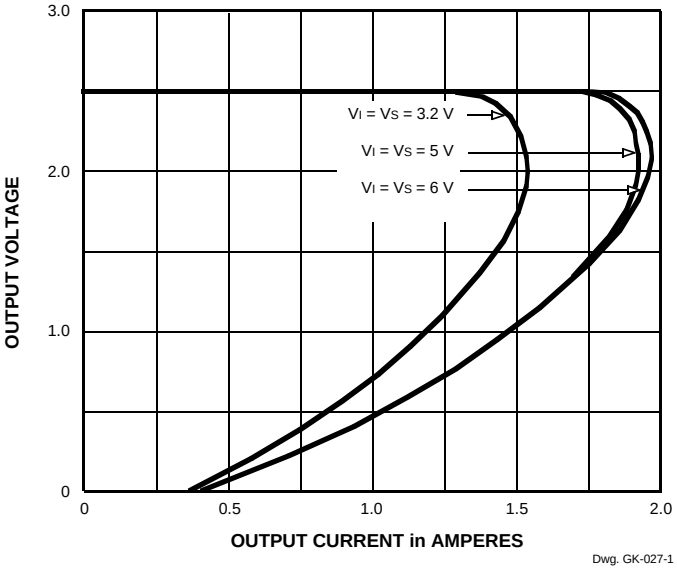

V_{OUT} vs V_{IN}

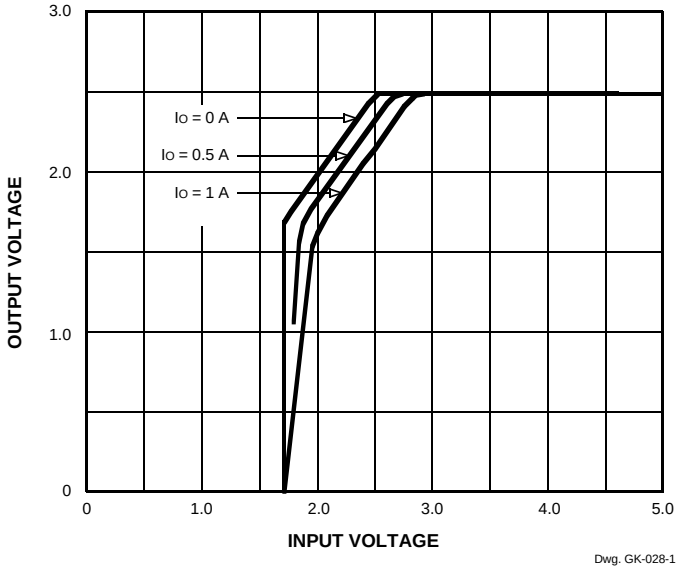

Allegro MicroSystems, Inc.
115 Northeast Cutoff, Box 15036
Worcester, Massachusetts 01615-0036 (508) 853-5000
SanKen

TYPICAL CHARACTERISTICS at T_A = 25°C (cont'd)

Line regulation

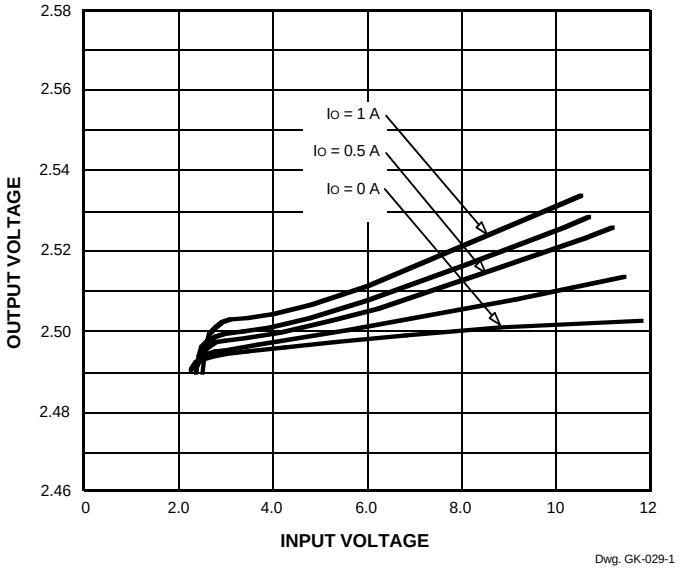

GND current

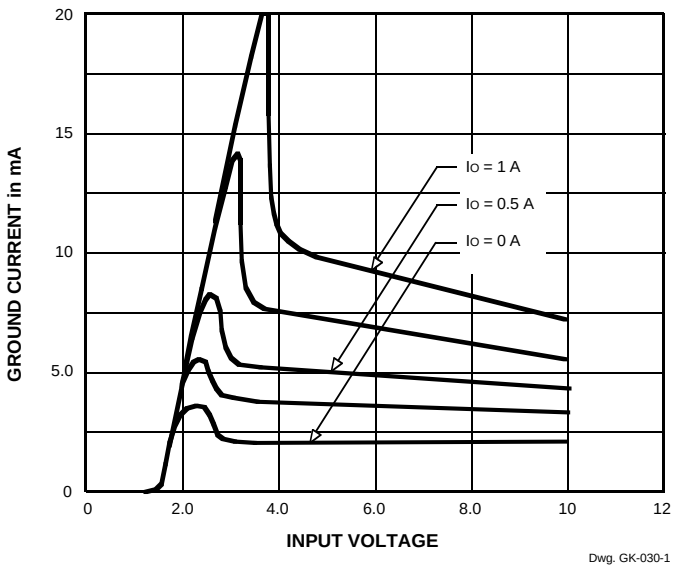

ENABLE input current

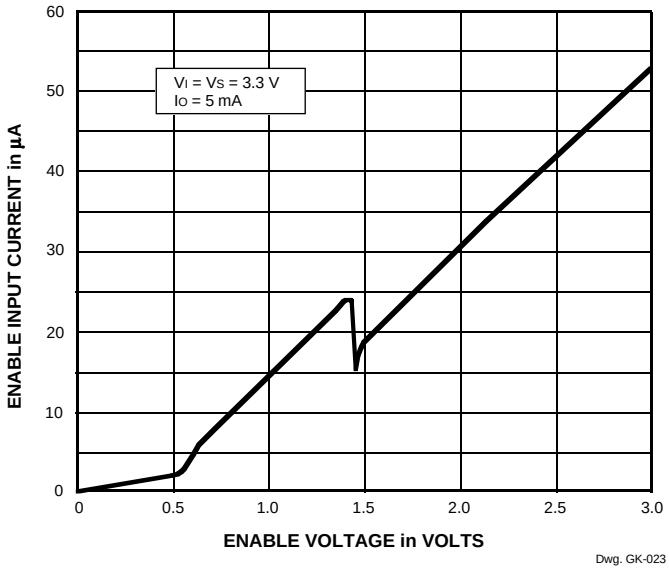

APPLICATIONS INFORMATION

Thermal shutdown and heat sinking. Thermal protection circuitry turns off the device should the junction temperature rise above 135°C. This is intended only to protect the device from failures due to excessive junction temperatures and should not imply that high-temperature operation is permitted. Ambient temperature is affected by air circulation and proximity to other heat-producing components. Normal operation is resumed when the junction temperature is reduced. Output terminals 7 and 8 are the lead frame and substrate of the pass transistor and provide a low thermal-resistance path for heat sinking.

In general, the maximum ambient temperature has the most effect on determining the heat sinking that is needed to maintain a safe normal operating junction temperature. The maximum heat sinking thermal resistance ($R_{\theta JA}$) can be calculated as

$$R_{\theta JA} = (135 - T_A) / I_O (V_I - 2.5)$$

where T_A is the maximum ambient temperature in °C,
I_O is the maximum output (load) current in amperes, and
V_I is the maximum input voltage in volts.

The following graph gives the required copper foil area (soldered to leads 7 and 8) to provide the required thermal resistance. Note that more is always better and both sides of the printed wiring board can be used.

ENABLE input. The ENABLE input includes an internal pull-down resistor. If this terminal is not connected (open-circuit fault), the device output is turned off.

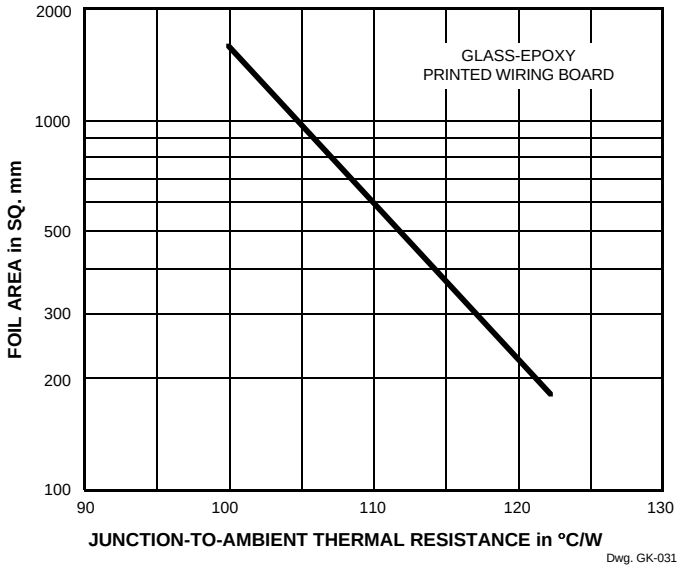

Overcurrent protection. The SI-3025LSA includes an overcurrent protection circuit, which limits the output current at start up. It thus cannot be used with

1) a constant-current load,
2) a power supply with positive and negative to a common load (center-tap type power supply),
3) a series power supply, or
4) a diode or resistor in series with the device ground to raise the output voltage.

Input voltage. Including ripple voltage and transients, the minimum input voltage should be greater than the sum of the output voltage and the maximum rated dropout voltage; the maximum input voltage must be less than the absolute maximum rated input voltage (16 V).

In most applications, the input voltage (terminal 1, V_I) and the supply voltage (terminal 3, V_S) are connected together.

Output capacitor. A 22 µF tantalum electrolytic capacitor is recommended between the output and ground. Very-low ESR capacitors should not be used.

Input capacitor. A 0.1 µF to 10 µF tantalum capacitor is recommended between the input and ground to prevent oscillation.

Allegro® MicroSystems, Inc.
115 Northeast Cutoff, Box 15036
Worcester, Massachusetts 01615-0036 (508) 853-5000
SanKen™

Dimensions in Millimeters
(controlling dimensions)

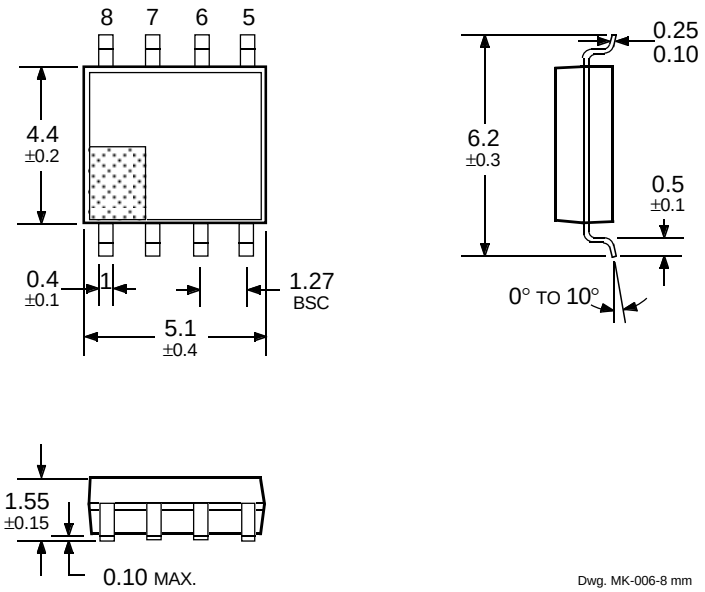

NOTES: 1. Exact body and lead configuration at vendor's option within limits shown.
2. Lead spacing tolerance is non-cumulative.
3. Leads 7 and 8 are internally connected together and provide heat sinking of the pass transistor.

Tape and Reel Dimensions in Millimeters
(controlling dimensions)

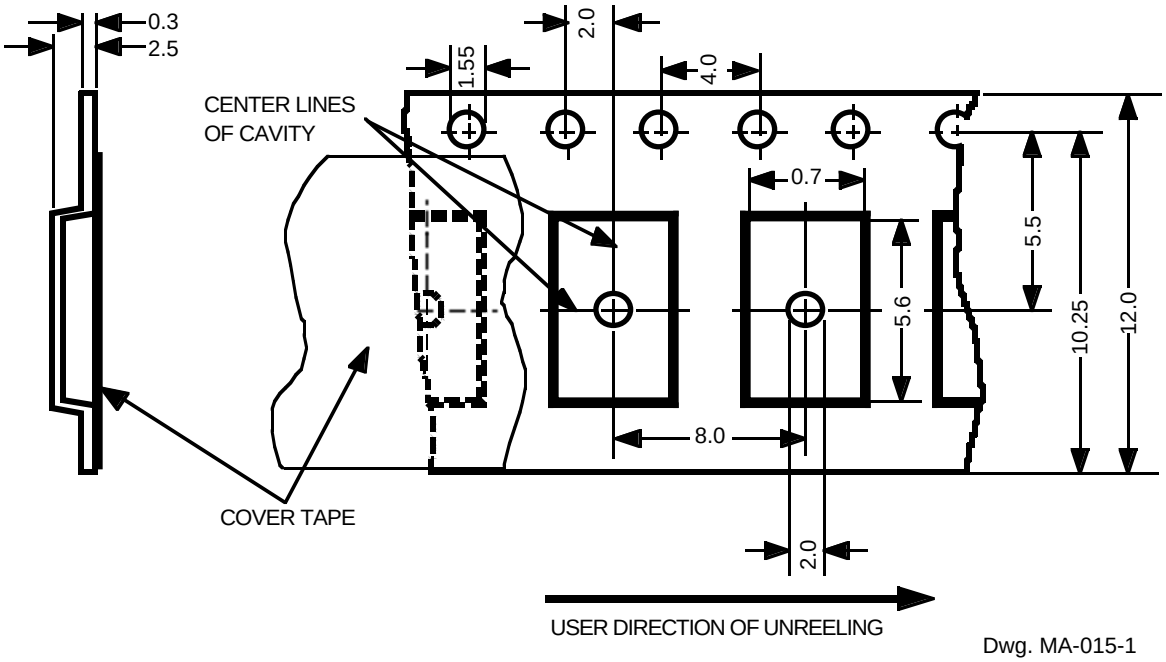

Dwg. MA-015-1

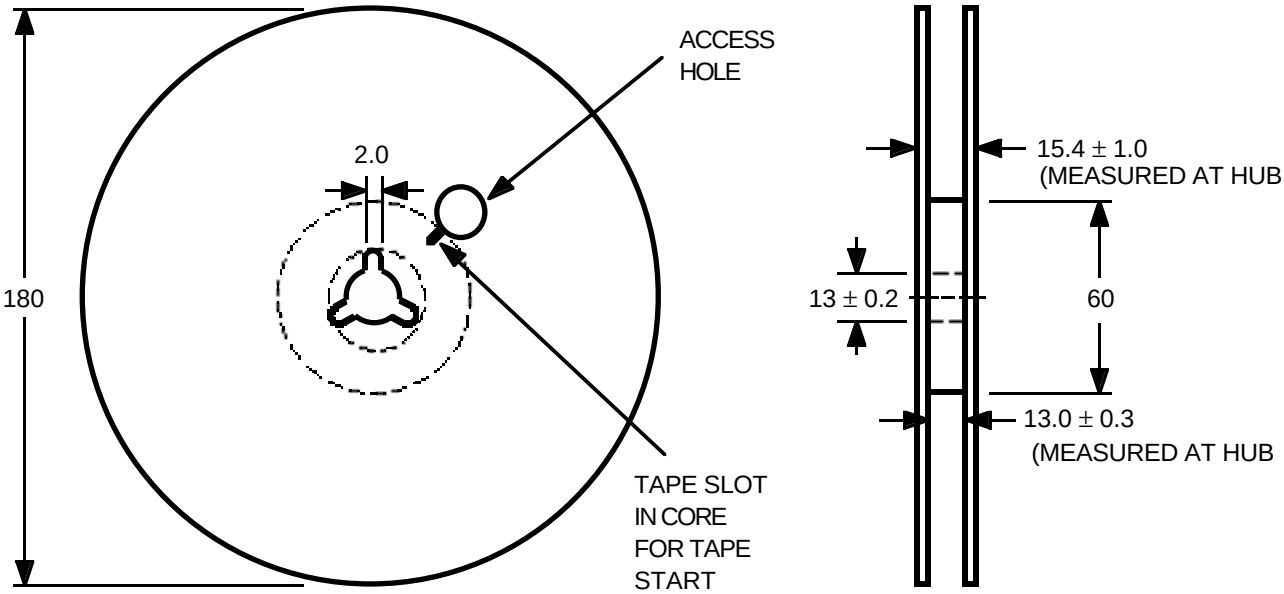

Dwg. MA-018-1

Allegro MicroSystems, Inc.
115 Northeast Cutoff, Box 15036
Worcester, Massachusetts 01615-0036 (508) 853-5000
SanKen

The products described herein are manufactured in Japan by Sanken Electric Co., Ltd. for sale by Allegro MicroSystems, Inc.

Sanken and Allegro reserve the right to make, from time to time, such departures from the detail specifications as may be required to permit improvements in the performance, reliability, or manufacturability of its products. Therefore, the user is cautioned to verify that the information in this publication is current before placing any order.

When using the products described herein, the applicability and suitability of such products for the intended purpose shall be reviewed at the users responsibility.

Although Sanken undertakes to enhance the quality and reliability of its products, the occurrence of failure and defect of semiconductor products at a certain rate is inevitable.

Users of Sanken products are requested to take, at their own risk, preventative measures including safety design of the equipment or systems against any possible injury, death, fires or damages to society due to device failure or malfunction.

Sanken products listed in this publication are designed and intended for use as components in general-purpose electronic equipment or apparatus (home appliances, office equipment, telecommunication equipment, measuring equipment, etc.). Their use in any application requiring radiation hardness assurance (e.g., aerospace equipment) is not supported.

When considering the use of Sanken products in applications where higher reliability is required (transportation equipment and its control systems or equipment, fire- or burglar-alarm systems, various safety devices, etc.), contact a Sanken sales representative to discuss and obtain written confirmation of your specifications.

The use of Sanken products without the written consent of Sanken in applications where extremely high reliability is required (aerospace equipment, nuclear power-control stations, life-support systems, etc.) is strictly prohibited.

The information included herein is believed to be accurate and reliable. Application and operation examples described in this publication are given for reference only and Sanken and Allegro assume no responsibility for any infringement of industrial property rights, intellectual property rights, or any other rights of Sanken or Allegro or any third party that may result from its use.

LINEAR REGULATORS

IN ORDER OF 1) OUTPUT VOLTAGE AND 2) OUTPUT CURRENT

V_O	Max I_O	Max DC In	Max. Dropout Voltage	Part Number	Package
1.8 V	1.0 A	16 V	1.2 V @ 1.0 A	SI-3018LSA	8-Lead SOIC
2.5 V	1.0 A	16 V	800 mV @ 1.0 A	SI-3025LSA	8-Lead SOIC
3.3 V	1.0 A	16 V	800 mV @ 1.0 A	SI-3033LSA	8-Lead SOIC
3.3 V	1.5 A	20 V	500 mV @ 1.0 A	SI-3033C	5-Lead TO-220
5.0 V	1.0 A	25 V	500 mV @ 0.5 A	SI-3050N	TO-220
5.0 V *	1.5 A	35 V	1.0 V @ 1.5 A	SLA3001M	Power-Tab SIP
5.0 V	1.5 A	35 V	500 mV @ 1.0 A	SI-3050C	5-Lead TO-220
5.0 V	1.5 A	35 V	500 mV @ 1.0 A	SI-3051N	TO-220
5.0 V	2.0 A	25 V	500 mV @ 1.0 A	SI-3052V	TO-3P
7.7 V	15 mA	30 V	–	A8178LLT	SOT-89
9.0 V	1.0 A	30 V	500 mV @ 0.5 A	SI-3090N	TO-220
9.0 V *	1.5 A	35 V	1.0 V @ 1.5 A	SLA3001M	Power-Tab SIP
9.0 V	1.5 A	35 V	500 mV @ 1.0 A	SI-3090C	5-Lead TO-220
9.0 V	1.5 A	35 V	500 mV @ 1.0 A	SI-3091N	TO-220
12 V	1.0 A	30 V	500 mV @ 0.5 A	SI-3120N	TO-220
12 V *	1.5 A	35 V	1.0 V @ 1.5 A	SLA3001M	Power-Tab SIP
12 V	1.5 A	35 V	500 mV @ 1.0 A	SI-3120C	5-Lead TO-220
12 V	1.5 A	35 V	500 mV @ 1.0 A	SI-3121N	TO-220
12 V	2.0 A	30 V	500 mV @ 1.0 A	SI-3122V	TO-3P
15 V	1.0 A	35 V	500 mV @ 0.5 A	SI-3150N	TO-220
15 V	1.5 A	35 V	500 mV @ 1.0 A	SI-3150C	5-Lead TO-220
15 V	1.5 A	35 V	500 mV @ 1.0 A	SI-3151N	TO-220
15 V	2.0 A	30 V	500 mV @ 1.0 A	SI-3152V	TO-3P
15.7 V †	1.0 A	35 V	1.0 V @ 1.0 A	SLA3002M	Power-Tab SIP
24 V	1.5 A	45 V	500 mV @ 1.0 A	SI-3240C	5-Lead TO-220
24 V	1.5 A	45 V	500 mV @ 1.0 A	SI-3241N	TO-220

* Three outputs, one each at 5 V, 9 V, and 12 V.

† Also includes two switching regulator outputs for 5 V at 500 mA and 9 V at 400 mA.

Also, see 83145 and 84145 Latched, Universal Input-Voltage Switches.

Allegro® MicroSystems, Inc.
115 Northeast Cutoff, Box 15036
Worcester, Massachusetts 01615-0036 (508) 853-5000
SanKen™

WWW.ALLDATASHEET.COM

Copyright © Each Manufacturing Company.

All Datasheets cannot be modified without permission.

This datasheet has been download from :

www.AllDataSheet.com

100% Free DataSheet Search Site.

Free Download.

No Register.

Fast Search System.

www.AllDataSheet.com